PRODUCT CATALOG 2014/2015

Photoelectric Sensors

MultiTask photoelectric sensors, miniature photoelectric sensors, small photoelectric sensors, compact photoelectric sensors, cylindrical photoelectric sensors, fiber-optic sensors and fibers

SICK
Sensor Intelligence.

www.mysick.com – select and order online

Search online quickly and safely – with the SICK "Finders"

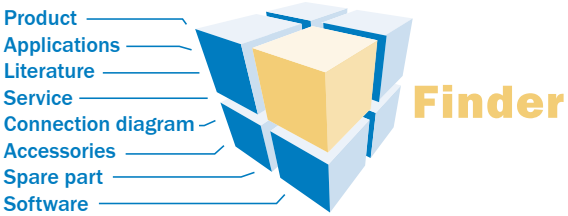

Product Finder: We can help you to quickly target the product that best matches your application.

Applications Finder: Select the application description on the basis of the challenge posed, industrial sector, or product group.

Literature Finder: Go directly to the operating instructions, technical information, and other literature on all aspects of SICK products.

Efficiency – with the e-commerce tools from SICK

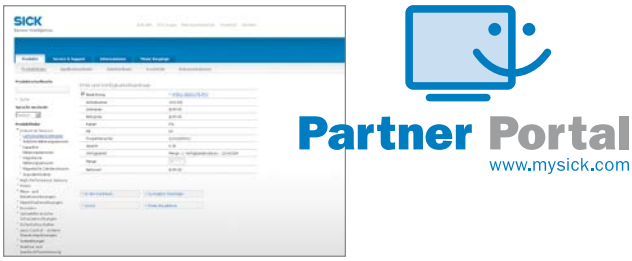

Find out prices and availability: Determine the price and possible delivery date of your desired product simply and quickly at any time.

Request or view a quote: You can have a quote generated online here. Every quote is confirmed to you via e-mail.

Order online: You can go through the ordering process in just a few steps.

Navigation in the PDF document – Links to online ordering system

By bookmarks and tables of contents

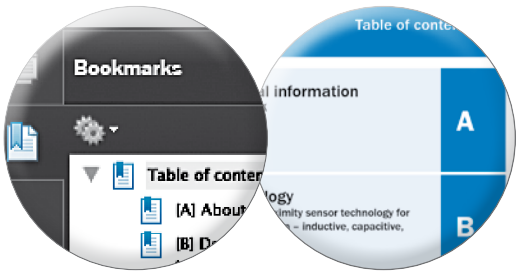

By links, QR codes and part numbers

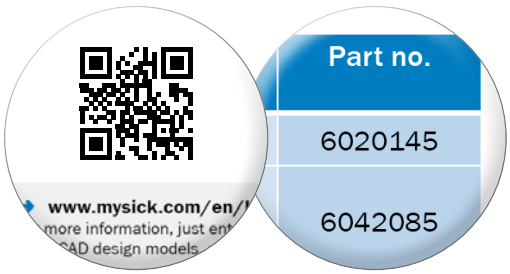

By page references

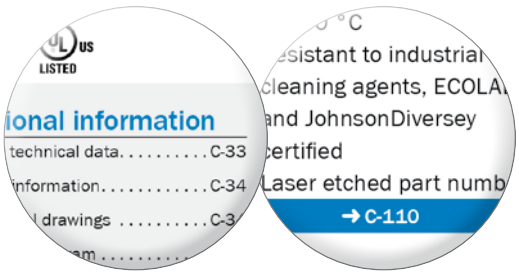

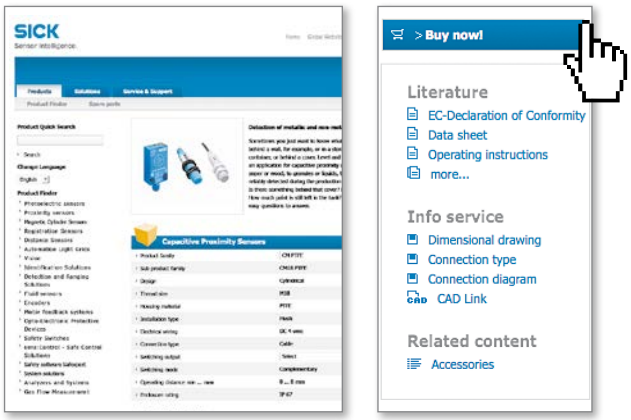

Housing properties

Rectangular design | Cylindrical design | Hybrid design | VISTAL® | Stainless steel | PTFE coating | IP 69K | Explosion protection housing

★ Pictograms marked with a star describe special properties that are necessary for special applications.

Sensor properties

Photoelectric proximity sensors | Photoelectric retro-reflective sensors | Through-beam photoelectric sensors | Switching frequency ≥ 2 kHz | AC/DC | IO-Link | AutoAdapt

Optics properties

PinPoint LED | Laser | Focused optics | V-optics | Line-shaped light spot | Light array | SIRIC® | Delta-S-Technology®

Special applications

Hygienic and washdown zones | ZoneControl | Detecting transparent objects | Detecting perforated objects | Detecting small objects | Detecting uneven, shiny objects | Detecting objects wrapped in film | Detecting objects with position tolerances | Detecting high-speed objects | Explosive areas | Zero gap detection

Fibers

Fiber properties

Threaded sleeve | Smooth sleeve | 90° deflection | Flat design | Flexible fibers | Long end sleeve | Glass fibers

Sensor properties

Proximity system | Through-beam system

Special applications

Area detection | Heat-resistant | Oil/chemical resistant | Liquid level | LCDs/ transparent objects/semi-conductors | Robotics | Retro-reflective | Can be cut to length

Smart Sensor Solutions

High-speed counters | Timers | Decentralized false tripping suppression (debouncing) | Product Track and Trace using Time Stamps

Quickly and easily choose from a wide range of variants

With its comprehensive portfolio of photoelectric sensors, SICK offers a wide range of solutions for all kinds of tasks.

The guidance system used in this catalog features a range of pictograms presented in various colors, which enables you to quickly locate the right sensor for you. The pictograms direct you to the key properties such as the housing, sensor principle, and optics, and form the "building blocks" for finding the right sensor solution. Since special applications often require special properties, these are marked with a star ★ .

At the start of each chapter, you will find selection guides that will provide you with a quick general overview of the products to help you choose the appropriate solution.

Housing properties

Sensor properties

Optics properties

Special applications

A

We deliver “Sensor Intelligence.”

SICK sensor solutions for industrial automation are the result of exceptional dedication and experience. From development all the way to service: The people at SICK are committed to investing all their expertise in providing with the very best sensors and system solutions possible.

A company with a culture of success

Over 6,000 people are on staff, with products and services available to help SICK sensor technology users increase their productivity and reduce their costs. Founded in 1946 and headquartered in Waldkirch, Germany, SICK is a global sensor specialist with more than 40 subsidiaries and representations worldwide. Our exemplary corporate culture fosters an optimum work-life balance, thus attracting the best employees from all over the world. SICK is one of the best employers – we have been among the winners of the prestigious German “Great Place to Work” award for many years in succession.

Innovation for the leading edge

SICK sensor systems simplify and optimize processes and allow for sustainable production. SICK operates at many research and development centers all over the world. Co-designed with customers and universities, our innovative sensor products and solutions are made to give a decisive edge. With an impressive track record of innovation, we take the key parameters of modern production to new levels: reliable process control, safety of people and environmental protection.

A corporate culture for sustainable excellence

SICK is backed by a holistic, homogeneous corporate culture. We are an independent company. And our sensor technology is open to all system environments. The power of innovation has made SICK one of the technology and market leaders – sensor technology that is successful in the long term.

A

“Sensor Intelligence.” for all requirements

SICK is a renowned expert in many industries, and is entirely familiar with the critical challenges they face. While speed, accuracy and availability take center stage in all industries, technical implementations vary greatly. SICK puts its vast experience to use to provide with precisely the solution you need.

For applications worldwide

Hundreds of thousands of installations and applications go to prove that SICK knows the different industries and their processes inside out. This tradition of uncompromising expertise is ongoing: As we move into the future, we will continue to design, implement and optimize customized solutions in our application centers in Europe, Asia and North America. You can count on SICK as a reliable supplier and development partner.

8015327/2014-02-08
Subject to change without notice

For your specific industry

With a track record of proven expertise in a great variety of industries, SICK has taken quality and productivity to new heights. The automotive, pharmaceutical, electronics and solar industries are just a few examples of sectors that benefit from our know-how. In addition to increasing speed and improving traceability in warehouses and distribution centers, SICK solutions provide accident protection for automated guided vehicles. SICK system solutions for analysis and flow measurement of gases and liquids enable environmental protection and sustainability in, for example, energy production, cement production or waste incineration plants.

For performance across the board

SICK provides the right technology to respond to the tasks involved in industrial automation: measuring, detecting, monitoring and controlling, protecting, networking and integrating, identifying, positioning. Our development and industry experts continually create groundbreaking innovations to solve these tasks.

www.sick.com/industries

A

For safety and productivity: SICK LifeTime Services

SICK LifeTime Services is a comprehensive set of high-quality services provided to support the entire life cycle of products and applications from plant walk-through all the way to upgrades. These services increase the safety of people, boost the productivity of machines and serve as the basis for our customers' sustainable business success.

The benefit of SICK services

Each of our products and solutions is accompanied by a comprehensive range of services tuned precisely to the requirements of the product or solution – along its entire life cycle. Backed by extensive industry expertise and more than 60 years of experience, LifeTime Services stand for maximum availability and an exceptional service life of our products and solutions.

Consulting & Design

- Plant walk-through
- Risk assessment
- Safety concept
- Feasibility studies
- Software and hardware design

Verification & Optimization

- Inspection
- Maintenance
- Barcode checks
- Accident investigation
- Stoptime measurement
- Machine safety inspection

Training & Education

- User training
- Seminars
- WebTraining

Product & System Support

- Commissioning
- Exchange units and repairs
- Remote support
- Hotline

Upgrade & Retrofits

- Machine conversion
- Sensor upgrades
- Retrofitting of technology

www.sick.com/services

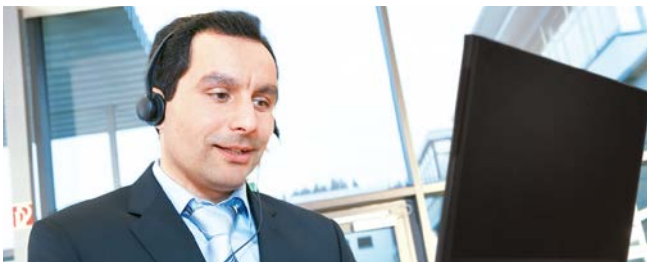

A

Versatile product range for industrial automation

From the simple acquisition task to the key sensor technology in a complex production process: With every product from its broad portfolio, SICK offers a sensor solution that best combines cost effectiveness and safety.

www.sick.com/products

Photoelectric sensors

- Miniature photoelectric sensors
- Small photoelectric sensors
- Compact photoelectric sensors
- Fiber-optic sensors and fibers
- Cylindrical photoelectric sensors
- MutliTask photoelectric sensors

Proximity sensors

- Inductive proximity sensors
- Capacitive proximity sensors
- Magnetic proximity sensors

Magnetic cylinder sensors

- Analog positioning sensors
- Sensors for T-slot cylinders
- Sensors for C-slot cylinders
- Sensor adapters for other cylinder types

Identification solutions

- Bar code scanners
- Image-based code readers
- Hand-held scanners
- RFID

8015327/2014-02-08

Detection and ranging solutions

- Laser measurement technology

System solutions

- Volume measurement systems
- Code reading systems
- Dimension weighing scanning systems
- Vision systems

Fluid sensors

- Level sensors
- Pressure sensors
- Flow sensors
- Temperature sensors

Registration sensors

- Contrast sensors
- Color sensors
- Luminescence sensors
- Fork sensors
- Array sensors
- Register sensors
- Markless sensors

Distance sensors

- Short range distance sensors (displacement)
- Mid range distance sensors
- Long range distance sensors
- Linear measurement sensors
- Ultrasonic sensors
- Double sheet detector
- Optical data transmission
- Position finders

A

Automation light grids

- Advanced automation light grids
- Standard automation light grids
- Smart light grids

Vision

- Vision sensors
- Smart cameras
- 3D cameras

Opto-electronic protective devices

- Safety laser scanners
- Safety camera systems
- Safety light curtains
- Multiple light beam safety devices
- Single-beam photoelectric safety switches
- Mirror and device columns
- Upgrade kits

Safety switches

- Electro-mechanical safety switches
- Non-contact safety switches
- Safety command devices

sens:Control – safe control solutions

- Safety relays
- Safety controllers
- Network solutions

8015327/2014-02-08
Subject to change without notice

Motor feedback systems

- Interfaces: incremental, HIPERFACE® and HIPERFACE DSL®
- Safety motor feedback systems
- Rotary and linear motor feedback systems for asynchronous, synchronous motors and linear motors

Encoders

- Absolute encoders
- Incremental encoders
- Linear encoders
- Wire draw encoders

Analyzers and systems

- Gas analyzers
- Dust measuring devices
- Analyzer systems
- Liquid analyzers
- Data acquisition systems
- Tunnel sensors

Gas flow measuring devices

- Gas flow meters
- Mass flow meters
- Volume flow measuring devices

Software

- Safexpert® safety software

B

Overview of sensor selection

Today's automation industry covers a broad range of applications. SICK is determined to meet the market's requirements and, as a result, offers a wide range of sensor solutions.

To ensure you have a clear overview when it comes to selecting a product, we take you quickly and directly to the right sensor.

- **Housing properties, page B-17**
- **Sensor properties, page B-23**
- **Optical properties, page B-33**
- **Special applications, page B-41**

8015327/2014-02-08
Subject to change without notice

B

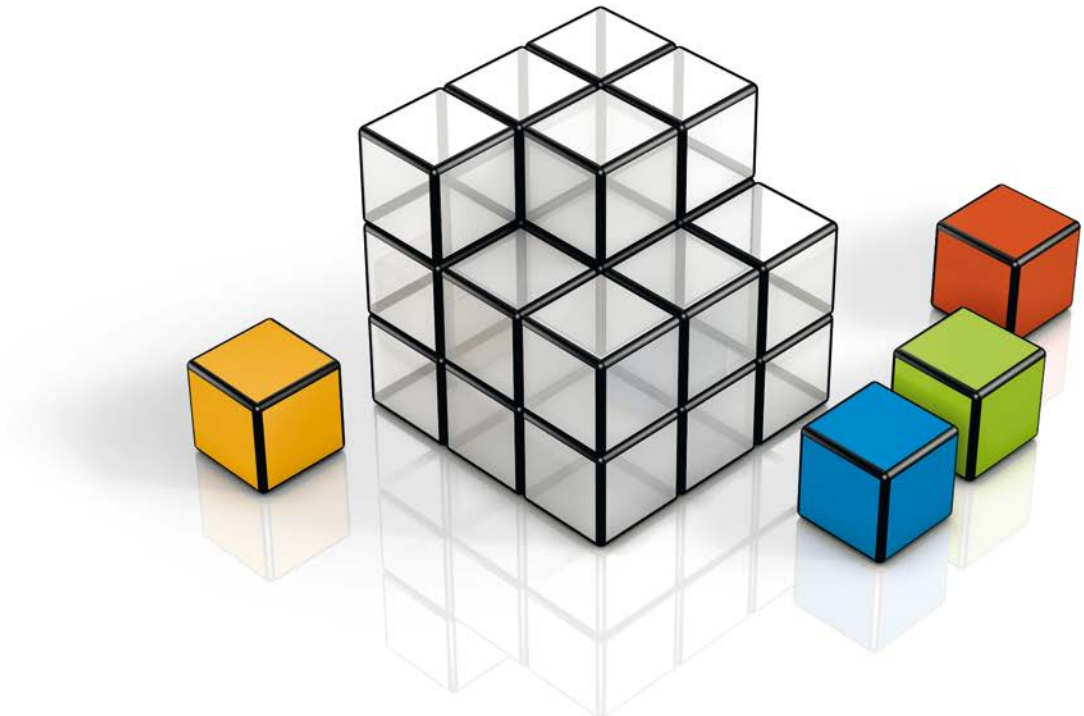

B

Appearances do matter

Each field of application places high demands on the sensor solution it requires. This starts right from the housing: to ensure that the sensors are seamlessly installed and provide reliable results, they have to be able to withstand a wide variety of environmental conditions. Because each core is only as good as its shell.

Rectangular design | Cylindrical design | Hybrid design | VISTAL® | Stainless steel | PTFE coating | IP 69K | Explosion protection housing

Housing properties

- Design, page B-18
- Materials, page B-20
- Special housing types, page B-21

Design

B

SICK's portfolio offers a wide variety of sensors for different installation situations. The **rectangular designs**, in particular, are available in a wide range of different sizes, providing ideal automation solutions even if there is only a small amount of space.

Cylindrical photoelectric sensors in standard or short designs and flexible **hybrid designs** complete the portfolio and expand the application options thanks to their range of variants (for details see Chapter I, cylindrical photoelectric sensors, from page I-683).

Rectangular design

Cylindrical design

Hybrid design

Fibers

Fibers provide a “slim line” connection between the sensor and the sensing target. They are a key feature of sensor solutions. When only a small space is available or when sensors must be installed in harsh environments, fibers are often the only way of detecting objects, details, positions, or marks.

The starting point for finding the ideal sensor solution for your application is choosing the right fiber and design. At SICK, the broad range of plastic and glass fibers permits optimal automation solutions. This applies, in particular, to tasks where the fiber must be specifically adapted to the application, where flexible cable installation is crucial, where high temperatures are common, or where a particular material compatibility is important. Plastic fibers are characterized by the smallest bend radii and maximum flexibility, and can be cut to any length. Glass fibers are more chemically resistant and are suitable for a high temperature range. The wide variety of end sleeves or individual special sleeves can handle virtually any installation requirement. Depending on the application, the protective cladding of the fibers can be made from plastic, metal, or PTFE (for exposure to aggressive chemicals).

In addition to a wide range of fiber-optic sensors, (amplifiers such as the WLL180T), world-leading response times of up to 16 µs and sensing ranges of up to 20 m can be achieved with the corresponding fibers.

Fibers are available as **through-beam** or **proximity sensors** and cover an extremely wide range.

Through-beam system

- Sender and receiver fibers are mounted separately from one another
- Detection of objects by moving the optical axis between sender and receiver
- Very large sensing ranges
- Accurate positioning
- Stable measuring position
- Optically opaque objects can be detected regardless of their shape, color, or material
- Strong light beam

Proximity system

- Sender and receiver fibers are combined in a single sensor head
- Recognition of object by detecting the light beam reflected from the object
- Optical axis does not need to be adjusted
- Reflective or transparent objects can be detected
- Easy mounting
- Ideal for color and position markings

Fiber-optic sensors and fibers . . . . . Chpt. J

VISTAL® | STAIN-LESS STEEL | PTFE

VISTAL® | Stainless steel | PTFE coating

Materials

B

In addition to plastic and metal housings, SICK offers other special housing materials for the most challenging environments.

VISTAL®

SICK is the only sensor manufacturer that uses the extremely rugged VISTAL® housing material. VISTAL® is a highly rigid fiber-glass reinforced plastic that is characterized by significantly enhanced mechanical properties compared with standard plastic materials (e.g., + 900 % E modulus in accordance with ISO 527, or + 400 % Brinell hardness in accordance with ISO 2039-1). This results in a highly rugged sensor housing. Another benefit of VISTAL®: the material is resistant to chemicals and therefore does not react adversely to cleaning agents and production chemicals.

W9-3 . . . . . G-448
W9-3 Glass G-462
W9L-3 . . . . . G-470
W9LG-3 . . . . . G-484

Stainless steel

It's all about using sensors that offer maximum reliability under the harshest of conditions to safeguard productivity! Sensors enclosed in a stainless steel housing are chemically resistant, rust-proof, and durable. The chemically resistant stainless steel housing makes these sensors suitable for applications requiring frequent intensive cleaning and disinfection. This is a key benefit for use in hygienic and washdown zones, particularly in the pharmaceutical and the food and beverage industries, but also in the packaging, electronics, and solar industries.

- Special application:
  Hygienic and washdown zones, page B-44

You can find selection guides for sensors with stainless steel housings at the start of each chapter.

PTFE

The PTFE housing material is unaffected by solvents and other aggressive chemicals. It shows no change whatsoever following contact with most chemicals. Its surface is so smooth and slippery that hardly any external substance can stick to it. It has the ideal properties for use in hygienic and washdown zones.

- Special application:
  Hygienic and washdown zones, page B-44

W4-3 PTFE F-250
W12-2 Laser G-510
W12G G-520
W12-3 . . . . . G-528

Special housing types

IP 69K

In addition to ensuring dust particles don't enter the housing, the IP 69K design guarantees that the sensors and their accessories can withstand intensive cleaning processes.

- 100 bar high-pressure jet cleaning
- 16 liters per minute
- 80 °C water temperature
- 100 mm distance to unit under test
- Test with spray angle of 0°, 30°, 60°, and 90° with the unit under test rotating (5 revolutions per minute)

The IP 69K enclosure rating is the result of a sophisticated design and durable materials. It enables SICK sensors to easily withstand chemicals from high-pressure jet cleaning processes. This process, which is known as "washdown" is used particularly in the food and beverage industry as well as in the pharmaceutical industry to protect against bacteria and microorganisms. Sensors with the IP 69K enclosure rating are therefore not impaired by such organisms.

- Special application:
  Hygienic and washdown zones, page B-44

You can find selection guides for sensors with an IP 69K enclosure rating at the start of each chapter.

Explosion protection housing

Explosive areas are divided into zones. Using a sensor with this type of housing depends on the frequency and duration of a potentially explosive occurrence. Each zone defines what measures need to be taken and specifies the requirements for the sensors that should be applied.

Zone 2G: Sensors must guarantee a high level of safety. The W24-2 Ex sensor is therefore equipped with a rugged housing and specially designed NAMUR switching outputs.

Zone 3D/3G: Sensors must guarantee a normal level of safety. For these zones, SICK offers the W18-3 Ex and the W27-3 Ex in ready-to-install versions that comply with the standards (sensors with protective housing).

- Special application:
  Explosive areas, page B-56

Category 2G	Category 3D/3G
W24-2 Ex H-602	W18-3 Ex G-556
	W27-3 Ex H-632

B

It’s what’s inside that counts

Ensuring reliable detection on a wide range of surfaces relies on choosing the right sensor properties. Three basic sensor principles and their properties determine the sensing range, switching frequency, and switching threshold.

Photoelectric proximity sensors | Photoelectric retro-reflective sensors | Through-beam photoelectric sensors | Switching frequency ≥ 2 kHz | AC/DC | IO-Link | AutoAdapt

Sensor properties

Photoelectric proximity sensors

Photoelectric proximity sensors

B

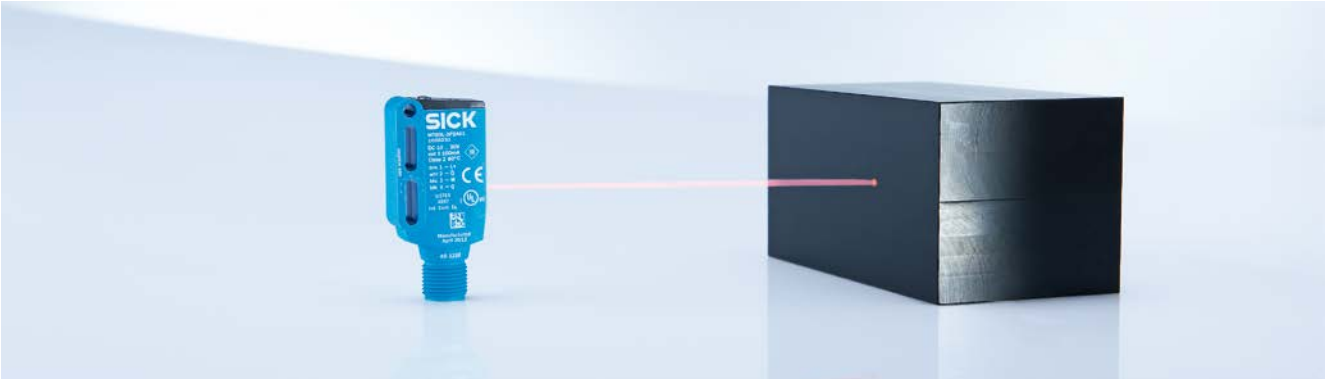

With photoelectric proximity sensors, the sender and receiver are in a single housing. The separate optics are angled towards each other, meaning that the point of intersection forms the upper limit for the sensing range. Photoelectric proximity sensors detect an object as soon as the reflected sensor light is received from its surface. When an object is detected, the sensor generates a defined, electrical output signal.

Energetic

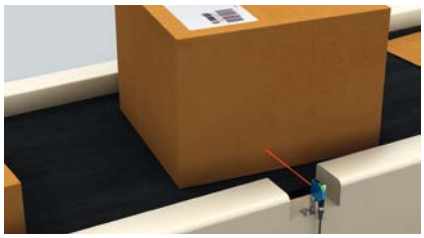

The **energetic photoelectric proximity sensor** with adjustable sensitivity is the most cost-effective variant. A light-colored surface reflects more light than a dark one and can therefore be detected from a greater distance away. To achieve similar results with a dark surface, the sensitivity of the sensor must be increased. Detecting a dark object against a light background is a challenge for energetic sensors. The object is obscured by the brighter background due to its higher reflectivity. Light-colored objects against dark backgrounds are easier to detect.

Background suppression (BGS)

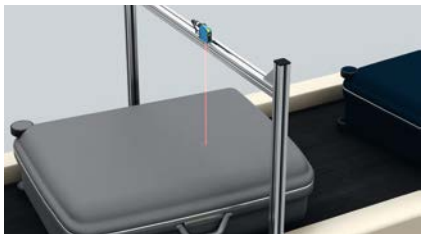

Photoelectric proximity sensors with **background suppression** operate on the basis of the geometric relation between the sending and receiving elements. The sensor is set to detect the object lying on the sensing range plane. Signals from objects located behind the set sensing range plane are suppressed.
In addition, the use of a diffuse LED and patented SIRIC® technology make a kind of “spatial vision” possible. The result is unparalleled detection reliability and ambient light immunity for small, transparent, or reflective objects in the area close to the machine – even with varying brightness or color contrasts.

Foreground suppression (FGS)

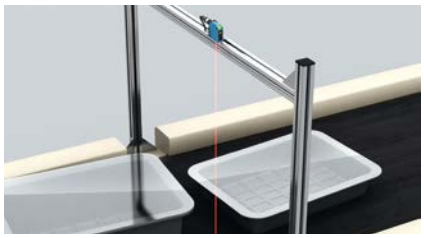

Photoelectric proximity sensors with **foreground suppression** are able to detect objects at a defined sensing range. All objects between the sensing range (set to the background) and the sensor are detected. The foreground is suppressed as a result of the special configuration of the sending and receiving elements in relation to one another. To ensure these sensors function reliably, the background (for example, a conveyor belt) needs to be relatively bright and should not vary in height. Photoelectric proximity sensors with foreground suppression are particularly well-suited for detecting dark and very shiny objects.

You can find selection guides for photoelectric proximity sensors at the start of each chapter.

Photoelectric retro-reflective sensors

Photoelectric retro-reflective sensors

With photoelectric retro-reflective sensors, the emitted light is returned by a reflector and is received and evaluated by the device. Polarizing filters prevent errors when detecting reflective objects. The use of laser diodes allows greater sensing ranges while simultaneously maintaining a high resolution. Focus ranges can be set with high precision. Photoelectric retro-reflective sensors are particularly suited for detecting transparent objects.
In such cases, it helps to use devices with reduced sensitivity or foreground suppression as well as an AutoAdapt function that dynamically changes the switching threshold based on environmental conditions.

- Sender and receiver in a single housing
- Different reflector sizes for various sensing ranges and object sizes
- Polarizing filters allow reflective objects to be detected
- Automatic sensitivity correction for detecting transparent objects

Standard optics

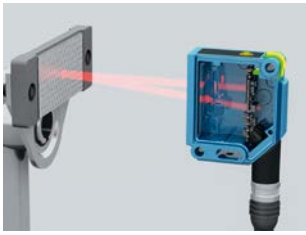

With the **dual lens system**, the sent and received beams are physically separated and are positioned at a shallow angle to one another. The sent and received beams only overlap in a certain sensing range segment. At close range, there is a blind zone where an object cannot be detected. When using sensors with dual lens optics, it is therefore important to note the specified minimum range, which should never be undercut.

Autocollimation

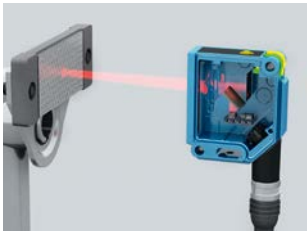

With the **autocollimation principle**, which unlike the dual lens principle uses only one optical lens, both the beam of light emitted by the sensor and the beam reflected by the reflector lie on a single optical axis. The emitted light passes through a semitransparent mirror before exiting the optical unit. After being returned by the reflector, the beam of light is diverted to the receiver with the aid of the same mirror.
The benefit of the autocollimation principle is that, unlike the dual lens principle, there is no blind zone in the area directly in front of the sensor. This enables even those objects that pass directly in front of the sensor to be reliably detected. As a result, photoelectric retro-reflective sensors with the autocollimation principle can also be mounted behind small gaps or openings.

You can find selection guides for photoelectric retro-reflective sensors at the start of each chapter.

Through-beam photoelectric sensors

Through-beam photoelectric sensors

B

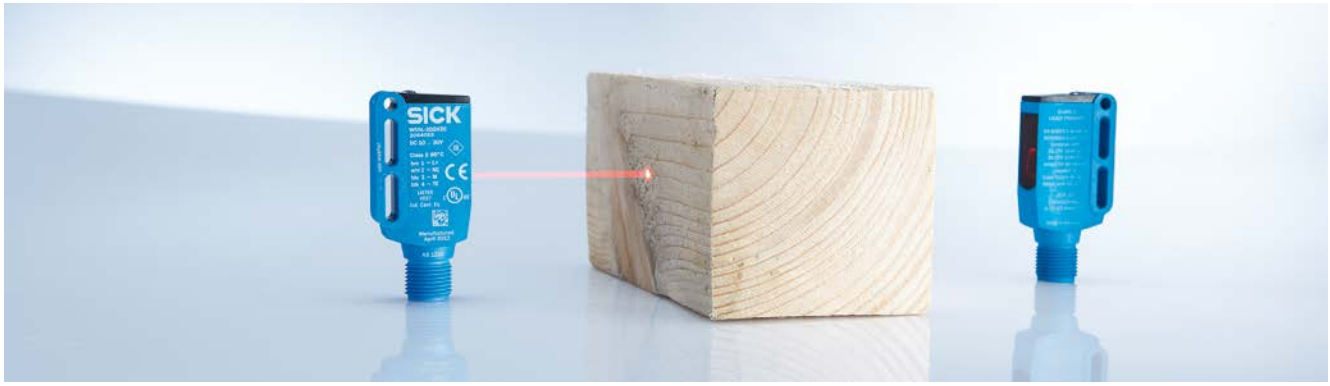

Through-beam photoelectric sensors are composed of two devices: a sender and a receiver. They are physically separate from one another and are each contained in their own housing.

The sender contains a light emitting diode (LED) or laser diode, and the receiver detects the incident light with a photodiode. Especially with the use of laser diodes, the separation of sender and receiver allows extremely long sensing ranges with a simultaneously high resolution and a precise setting of the focus range. Through-beam photoelectric sensors can therefore reliably detect opaque and reflective objects. However, through-beam photoelectric sensors are only suitable for detecting transparent objects to a limited extent.

You can find selection guides for through-beam photoelectric sensors at the start of each chapter.

Switching frequency ≥ 2 kHz

AC/DC

Special sensor properties

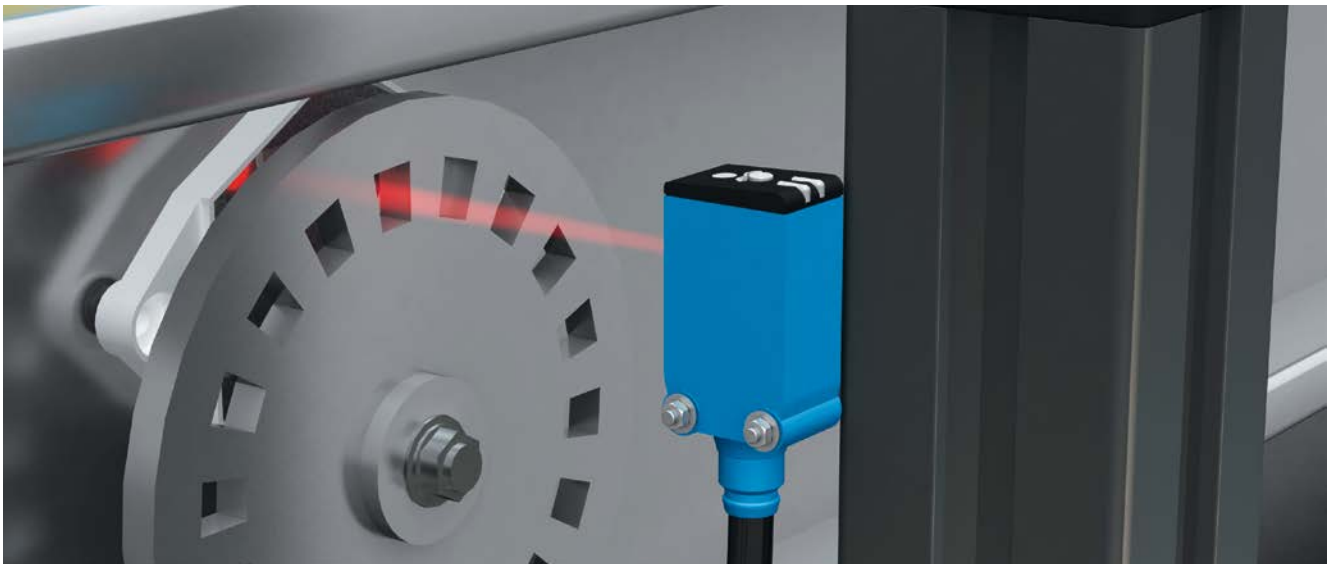

Fast response times enable reliable product detection in fast-paced manufacturing processes. This is a crucial feature in the detection of high-speed objects.

Switching frequency ≥ 2 kHz

Thanks to extremely high switching frequencies ranging from 2 kHz to 32 kHz, combined with extremely fast response times, these sensors are well-equipped for use in a special application: reliably detecting and recognizing the accurate positioning of very fast objects and operations in high-speed processes. Whether in the automotive, electronics, solar, or machine tools industry, these SICK product families are indispensable when speed and precision are required.

- Special application:
  Detecting high-speed objects, page B-55

AC/DC

In addition to the sensors that operate in the standard voltage range of 10 to 30 V DC, SICK also offers photoelectric sensors with a universal power supply and relay output. These devices can be operated with a supply voltage ranging from 24 to 240 V UC (i.e., V DC or V AC) and can therefore be used flexibly in a wide range of applications – both in industrial and commercial areas. The relay output also allows higher outputs to be directly connected via the sensor in a safe and reliable manner.

IO-Link

IO-Link

B

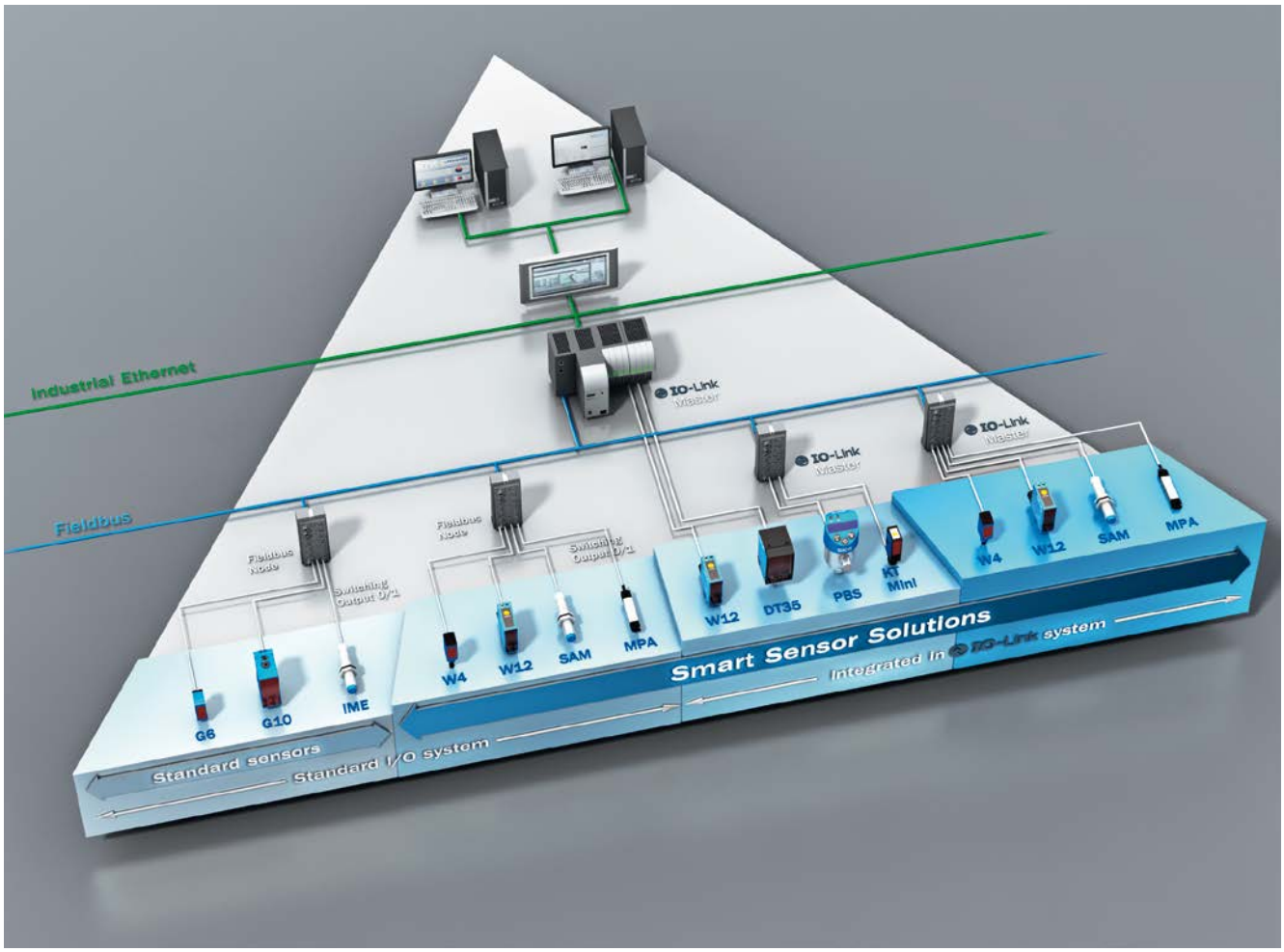

Clearing the final hurdles

A consistent communication concept right down to the lowest field level is key to using the features and technologies of state-of-the-art sensors and actuators, and making machines and systems more productive as a result. Through IO-Link, leading automation manufacturers have managed to establish a standard that solves the problem of clearing those final tricky hurdles in the communication chain. The standard interfaces that have been used on the sensor/actuator level up to now have not allowed the exchange of any data besides the actual process value. With sensors and actuators using integrated intelligence to perform increasingly complex functions, these straightforward output state or measured value interfaces have restricted communication and even curbed innovation in this area. In fact, transparent networking on all levels is essential if we want to look at a machine as a whole and, in this context, think about how we can optimize it. It must be possible to represent every component in the entire system network in terms of the information depth that it requires.

8015327/2014-02-08
Subject to change without notice

Spurring on innovation: The lowest field level

In an effort to drive productivity, leading automation manufacturers use IO-Link to define an open interface between sensors and actuators on one side and I/O modules on the other. In accordance with current standards for I/O networking via a point-to-point connection, the result is a communication channel that enables consistent transmission of process, parameter, and diagnostics data.
IO-Link involves a point-to-point connection that may be located underneath any given network. Being an integral part of the I/O module, the IO-Link master is installed either in the control cabinet or directly in the field as a remote I/O with an IP 65 and IP 67 enclosure rating. The IO-Link device is coupled with the master using a standard sensor/actuator cable measuring up to 20 m in length. The device – which may be any sensor, any actuator, or a combination of the two – sends and receives signals that are digitally transmitted via IO-Link. These signals can be “binary switching”, “analog”, “input”, or “output”, for instance.

To facilitate data transmission between the master and the device, the technology specifies a 3-wire design that is already familiar in the world of standard sensors and actuators. A standard UART protocol is used. The data is represented in what are known as data frames. In order to efficiently support the various forms of implementation for the IO-Link devices, different data frames have been specified. These data frames contain, for example, only service data, only process data, or a mixture of the two. Various transmission rates are available for communication between the master and the device on the physical layer. This makes it possible to implement sensors with configuration properties (receivers of service data or senders of process data) using just a few bits of user data. In addition, the technology allows the representation of signal bundles or complex hybrids such as analog input data or binary input and output data. Plus, IO-Link sensors with one switching bit are consistently compatible with standard sensors.

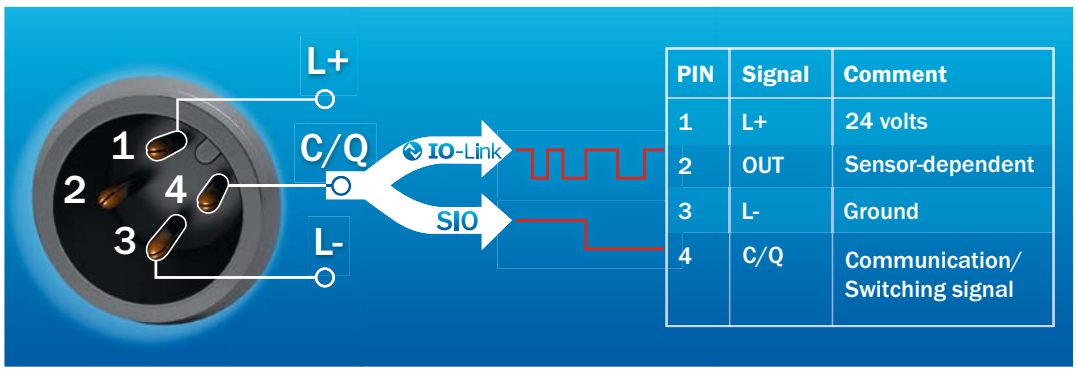

PIN	Signal	Comment
1	L+	24 volts
2	OUT	Sensor-dependent
3	L-	Ground
4	C/Q	Communication/ Switching signal

Overview of IO-Link communication

- Serial, bidirectional point-to-point connection
- No new bus system for signal transmission and power supply
- Backward-compatible with discrete standard PNP output sensors
- Operating modes: standard I/O mode (SIO), IO-Link mode
- Three transmission rates: 4,800 baud (COM 1), 38,400 baud (COM 2), 230,400 baud as an option (COM 3)
- Unshielded, standard 3-wire industrial cable for all connections
- M12 plug connector: 4-pin male connector for sensors, for example; 5-pin male connector for actuators, for example; 5-pin female connector for master
- Pin assignment: pin 1 with 24 V, pin 3 with 0 V, pin 4 with switching and communication cable (C/Q)
- Maximum cable length: 20 m
- Maximum power consumption for power supply: 200 mA
- Process data (such as switching signals or distance values) is transmitted cyclically; service data (such as parameters) is transmitted acyclically

You can find additional information on IO-Link in Chapter C: Smart Sensor Solutions.

★AutoAdapt

B

In the automated world, the aim is to minimize machine downtime. Thanks to the innovative AutoAdapt threshold adaptation, cleaning intervals can be extended and a longer sensor service life and higher system throughput can be achieved. The result: increased productivity.

The benefits of AutoAdapt at a glance

- When contamination occurs, the sensor automatically adjusts itself to the new conditions
- Maintenance of the devices is only required when contamination is significant
- The original threshold is automatically reset after cleaning

Signal attenuation due to an object in the light path

- Transparent objects weaken the beam of light
- Signal weakening or attenuation varies depending on the transparency of the object
- With the help of continuous threshold adaptation (AutoAdapt) or the autocollimation principle, highly transparent objects such as films and PET bottles are reliably detected

Sensors designed for the detection of transparent objects feature **AutoAdapt**, which allows the sensor to adapt to optical conditions.

For example, if detection is impaired due to contamination, such as dust deposited on the sensor lenses, the sensor signals this and adjusts itself to the new conditions. This is possible thanks to AutoAdapt, guided by microprocessor analysis. Device maintenance is not necessary until contamination is so significant that the sensor's ability to detect transparent objects eventually reaches system limits. This limit is reached significantly later than with conventional sensors.

The signal and the threshold return to the original level automatically after cleaning. This guarantees enhanced performance, even under harsh and highly contaminated application conditions.

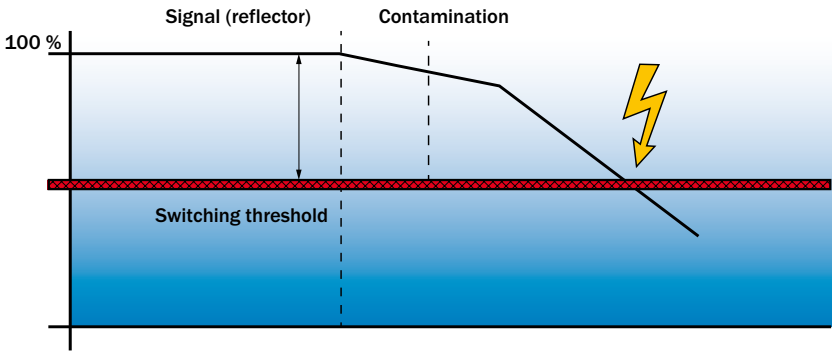

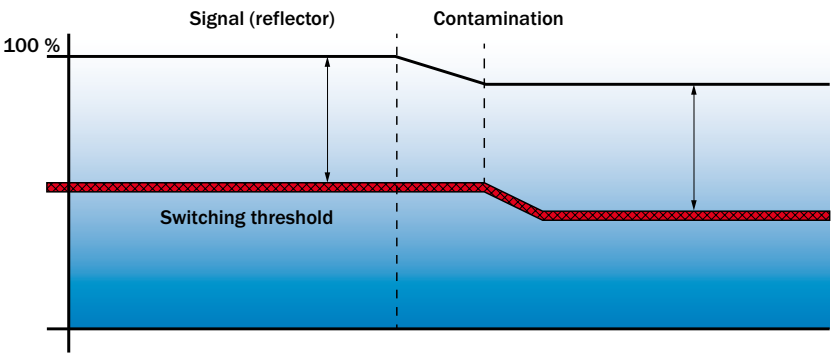

Examples of the signal attenuation of various materials

- Approx. 10 % signal attenuation
  - Clean PET bottles, clear glass, thin and clear films (e.g., cellophane), household plastic film, plastic wrapping
- Approx. 18 % signal attenuation
  - Clean clear glass bottles, thick films, film and wrapping folded multiple times
- Approx. 40 % signal attenuation
  - Green and brown glass, colored glass bottles

- Special application:
  Detecting transparent objects, page B-46

B

Attractive optics are always an advantage

Optics play a key role when it comes to detecting objects – particularly when they have special properties. With the innovative solutions from SICK, you will always be one step ahead with respect to these challenges.

PinPoint LED | Laser | Focused optics | V-optics | Line-shaped light spot | Light array | SIRIC® | Delta-S-Technology®

Type of light and light senders

B

SICK photoelectric sensors use various transmission sources to achieve optimum optical performance, to ensure universal object detection, and for simple and fast commissioning. In addition to standard red LED lights, green LED lights, and infrared LED lights, there are two more light sender technologies to which special attention should be paid.

PinPoint LED

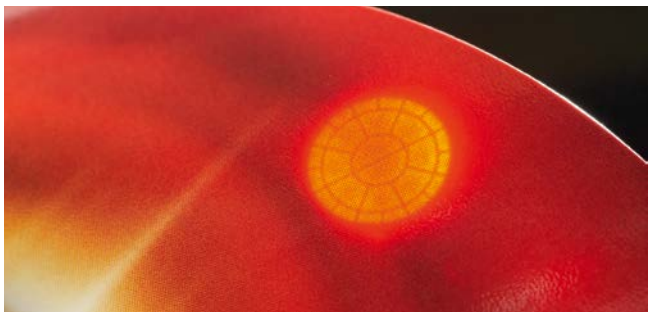

The benefits of the PinPoint LED at a glance

- Simple commissioning due to highly visible, uniform light spot
- Light spot diameter from 1 mm to 12 mm (depending on sensor type and sensing range)
- Increased sensing ranges in the red emitted light range
- No laser safety measures required
- Wide temperature range from –40 °C to +60 °C
- Long service life

The PinPoint LED concentrates the energy into a small area, increasing the light intensity and hence also the visibility of the light spot. This makes it much easier for the user to align and commission the sensor. By significantly increasing the sensing ranges, the PinPoint LED also opens up new fields of application for photoelectric sensors.

You can find selection guides for PinPoint LED products at the start of each chapter.

Red laser light

Sensors equipped with a laser diode can precisely detect objects or features, no matter how small, thanks to the extremely small laser beam. They are also ideal for applications where the laser beam needs to be guided through small openings or holes.

The benefits of the red laser light at a glance

- Extremely small light spot for highly precise detection tasks
- Light spot diameter from 0.1 mm to 2 mm
- Extremely long sensing ranges for photoelectric retro-reflective sensors and through-beam photoelectric sensors
- Time-of-flight (ToF) technology for high precision with long sensing range
- Simple commissioning due to highly visible light spot
- Safety through laser classes 1 and 2

- Special application:
Detecting small objects, page B-50

Types of optics

Focused optics

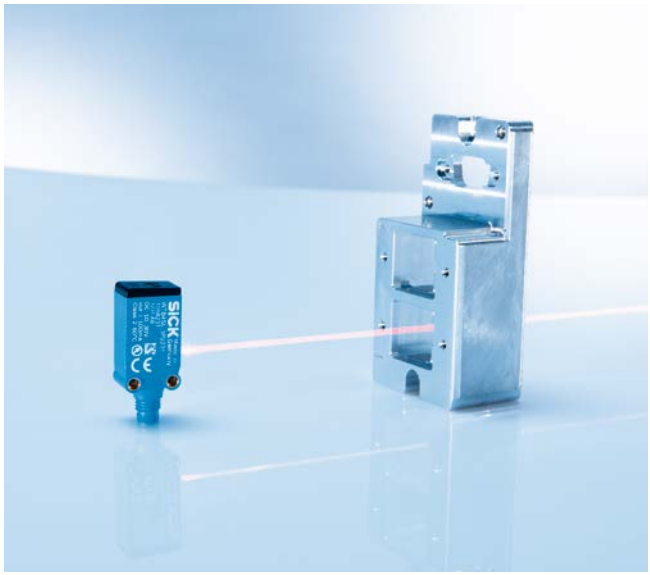

In sensors with focused optics, the transmitted beam of light is fixed at a defined distance (focused) and therefore has a particularly small light spot diameter in the target range. This property enables the reliable detection of small objects in the focal point or through narrow gaps or holes.

- Special application:
  Detecting small objects, page B-50

V-optics

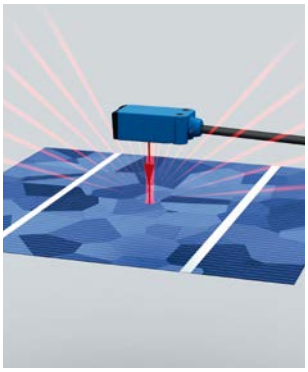

Standard optics: The energy is greatly reduced on the receiver.

Diffuse reflection: The object reflects the light in every direction, even in the direction of the sender LED and the reflector.

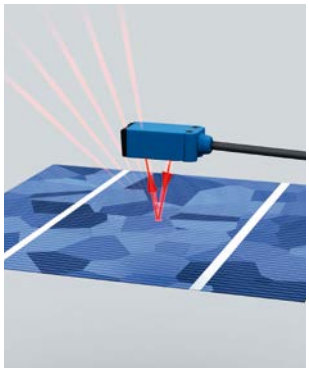

V-optics: 100 % of the light is received from the shiny reflection.

Diffuse reflection: As the light beam is not emitted from the sensor in a straight line, the receiver can receive a higher amount of reflected energy.

SICK sensors with v-optics use an inclined, v-shaped light beam to direct more reflected light into the receiver. This means more energy is received when the detection substrate is in close proximity to the sensor. With shiny or deep-black objects in particular, a sensor with v-optics receives a considerably higher amount of the reflected light.

- Special application:
  Detecting uneven, shiny objects, page B-52

Light spot geometries

B

Line-shaped light spot

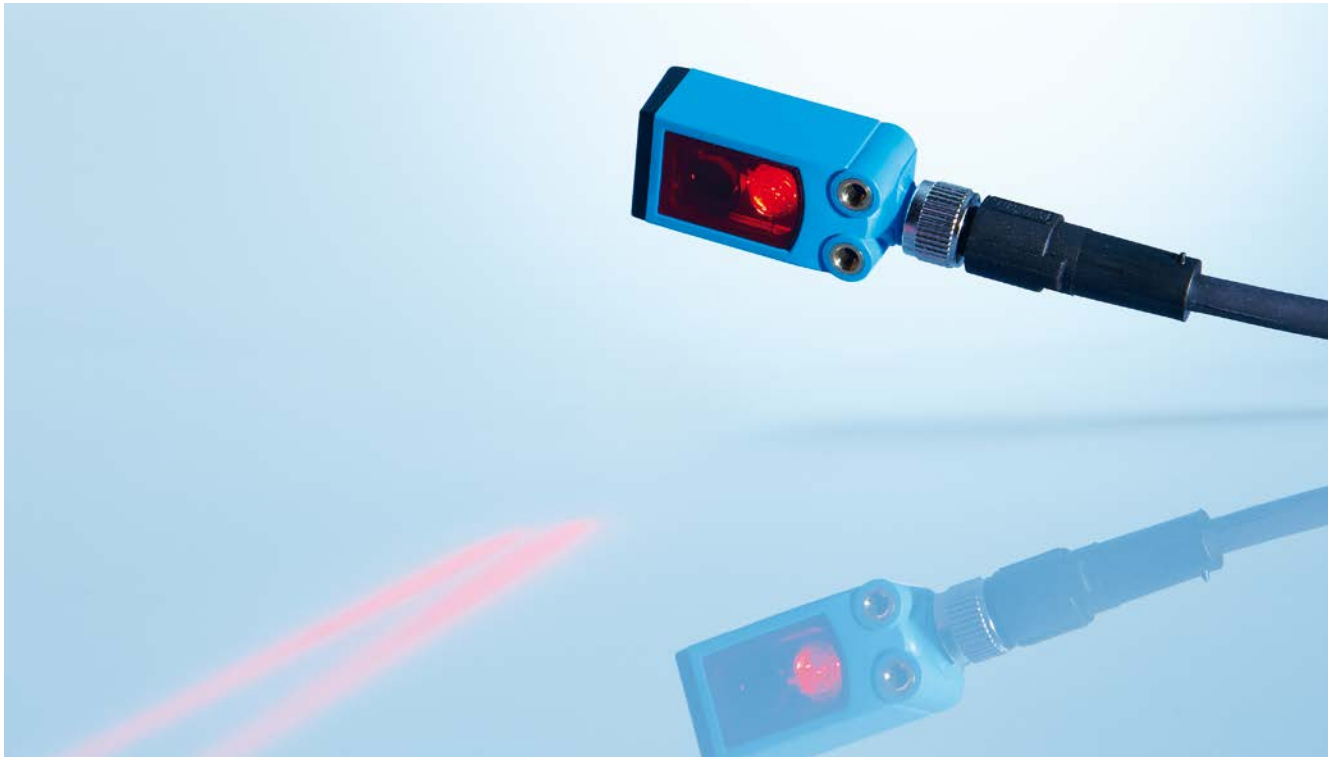

Line-shaped light spots ensure that the sensor reliably recognizes corners, crosspieces, and gaps on the objects as uniform surfaces. This is particularly useful for recognizing irregularly shaped, perforated objects or for detecting shiny, uneven surfaces.

Sensors with a line-shaped light spot demonstrate their full potential in the following fields of application in particular:

- Detecting flat, highly reflective objects on conveyor belts (e.g., blister packaging, soup packets, chocolate bars, etc.)
- Detecting structured objects with cutouts, grooves, and openings (e.g., perforated metal sheets and printed circuit boards)
- Detecting reflective and irregularly shaped objects (e.g., coffee packaging)
- Detecting objects on very close, reflective, and high-contrast backgrounds

- Special applications:
  Detecting transparent objects, page B-46
  Detecting perforated objects, page B-49
  Detecting flat, uneven, shiny objects, page B-52

★ Light array

In contrast to conventional photoelectric sensors with a dot-shaped light spot, a sensor with a light array can monitor a significantly larger area. The light array is generated by combining a PinPoint LED with special optics. The result is a constant light array up to 50 mm between the photoelectric sensor and reflector. This allows for the position-independent and reliable detection of objects that vary in terms of position or height and pass through the light array.

Sensors with a light array are the ideal option in the following applications:

- Reliable edge detection when edge position is undefined (e.g., curved wooden slats, curved glass, non-rigid parts, bags, etc.)
- Leading edge detection for objects with height tolerances (e.g., pallets or parcels of differing height)
- Detecting transparent objects
- Overhang monitoring for storage and retrieval systems
- Rupture monitoring (e.g., when manufacturing cables and steel pipes)
- “Pick-to-light”: Monitoring trays on assembly lines when components are removed manually from different totes

- Special applications:
  Detecting transparent objects, page B-46
  Detecting perforated objects, page B-49
  Detecting uneven, shiny objects, page B-52
  Detecting objects with position tolerances, page B-54

Reflex Array E-134
LL3 . . . . . J-804

SIRIC®

Delta-S-Technology®

Special optical technologies

B

SIRIC®

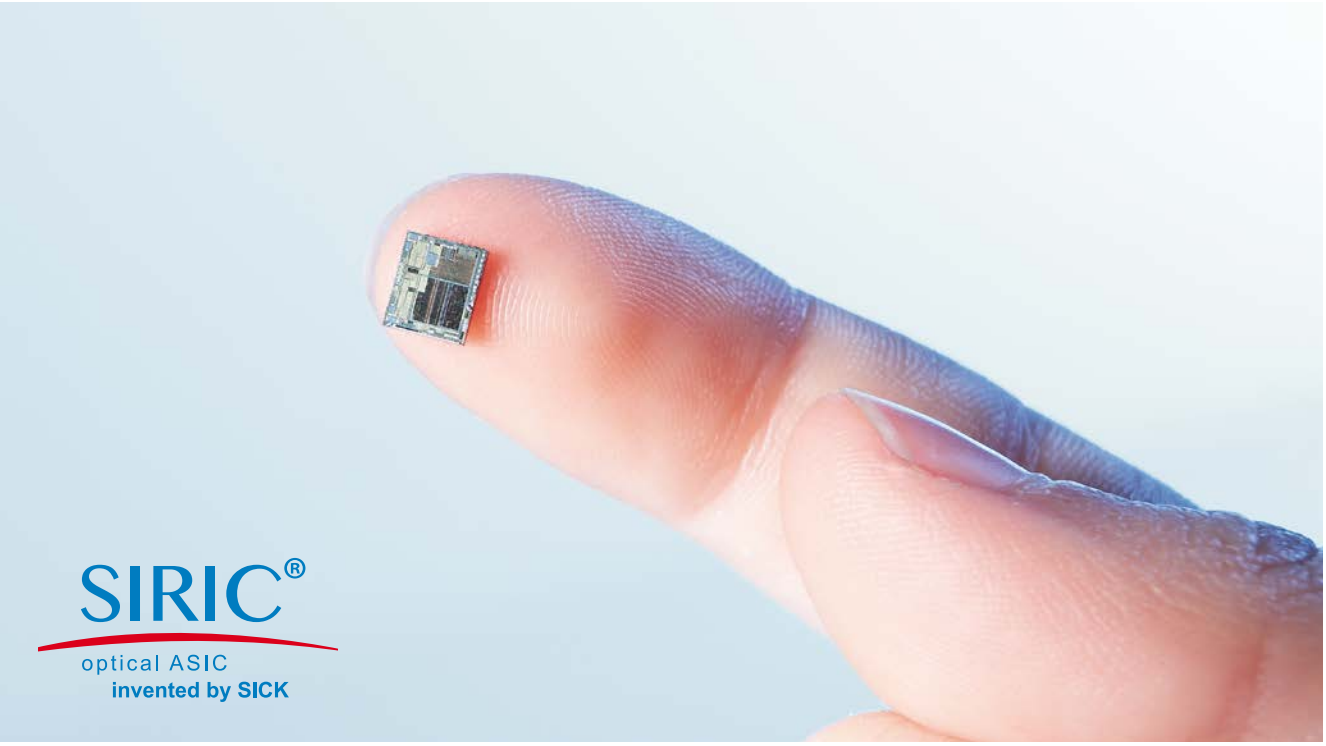

SIRIC® is the latest generation of ASIC (Application Specific Integrated Circuit) sensors from SICK. Now, for the first time, digital signal processing methods have been integrated into the world of photoelectric sensors. Sensors equipped with this technology are more powerful than ever before and are highly resistant to all known optical and high-frequency influences. Part of SICK's Smart Sensor Solutions, they can be seamlessly integrated into the automation network (you can find additional information on Smart Sensor Solutions in Chapter C).

The benefits of SIRIC® at a glance

- Optical reliability regardless of ambient light and light from other sensors at high switching frequencies
- Increased sensing range
- Customization
- Easy configuration via IO-Link
- Miniaturization
- Rugged design for handling shock, vibration, and electro-magnetic disturbances

8015327/2014-02-08
Subject to change without notice

NEW

B

Delta-S-Technology®

The patented Delta-S-Technology® is unique: Two high-resolution energy scales with the light beams of four PinPoint2.0 LEDs, specific SICK SIRIC® ASIC technology and range measurement. This technology allows seamless detection of corners, folds, and grooves – regardless of color, object size, surface, and background.

There is a key reason for linking PinPoint2.0 LEDs and SIRIC®: The use of an extremely wide range of sensor principles to counter glare, changes in contrast, unevenness, and reflective interference. This guarantees reliable, comprehensive use for all known items of packaging and folding boxes.

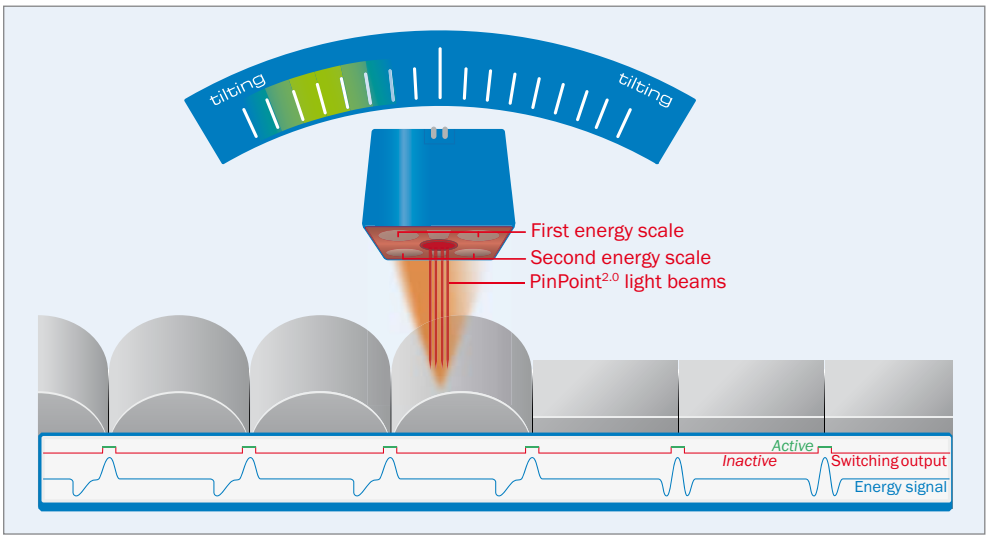

Detection of different object contours

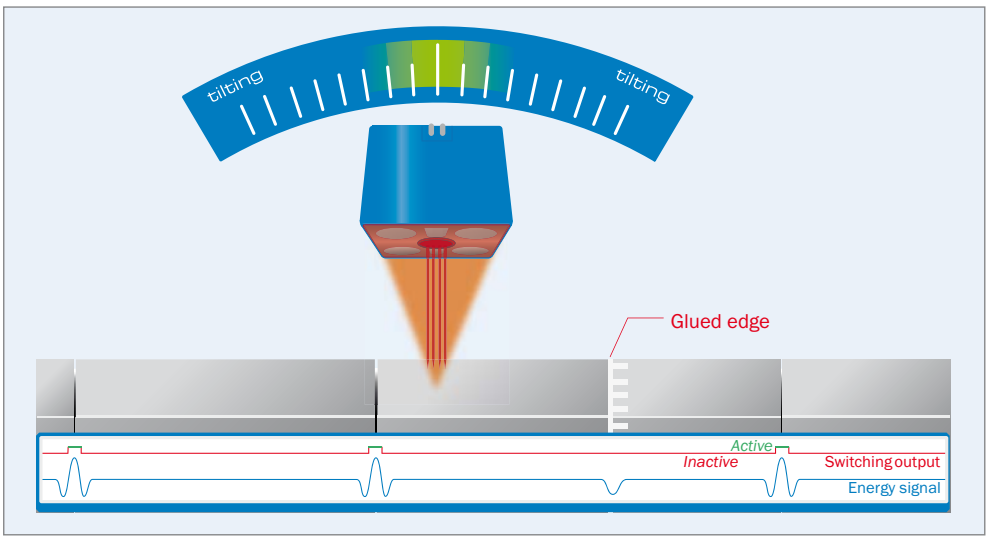

Glued joints are suppressed

- Special application:
  Zero gap detection, page B-57

DeltaPac E-114

B

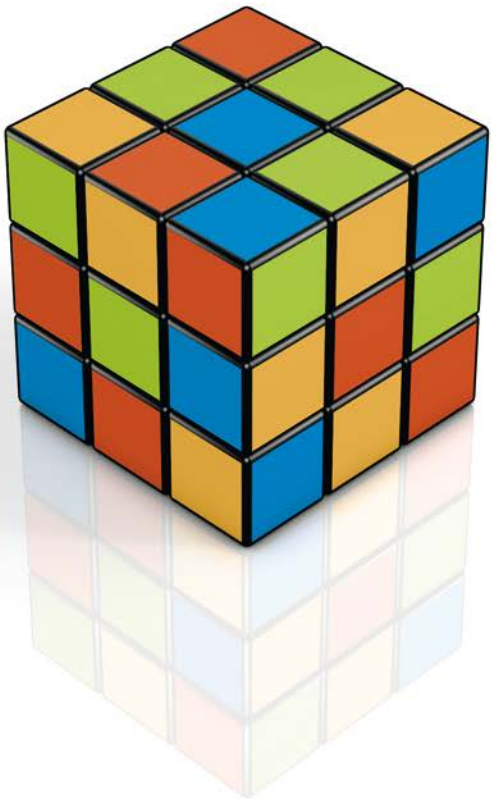

8015327/2014-02-08
Subject to change without notice

The solution may surprise you

No matter which way you look at it, it's a great feeling when you have the right solution available to deal with a complex task. Our work is only complete when we have the right combination of packaging and sensing technology to provide you with a solution that fits your specific application.

Hygienic and washdown zones | ZoneControl | Detecting transparent objects | Detecting perforated objects | Detecting small objects | Detecting uneven, shiny objects | Detecting objects wrapped in film | Detecting objects with position tolerances | Detecting high-speed objects | Explosive areas | Zero gap detection

Special applications

Hygienic and washdown zones

Hygienic and washdown zones

B

Flawless reliability and durability are key requirements when using sensors in hygienic and washdown zones. In the pharmaceutical and the food and beverage industries, washdown environments represent just one type of challenge: The sensors must also be able to withstand the daily high-pressure cleaning process, along with high thermal and mechanical loads.

When a sterile work environment requires daily disinfection of the machines, a high-quality stainless steel housing and maximum durability are needed. The high-performance Inox sensors are designed for harsh washdown and hygienic environments to help you implement specified cleaning schedules without prolonged machine downtimes.

The difference between washdown and hygienic design

Even though the key properties of all stainless steel sensors are the same, there is one essential feature that distinguishes a washdown sensor from a hygienic sensor: the way it is built.

A hygienically-designed sensor is built for use where it will come into contact with media, i.e., in the vicinity of food. It conforms to common standards and hygiene regulations and is constructed from the appropriate materials (also refer to “Hygienic design and materials” on the following page).

8015327/2014-02-08
Subject to change without notice

In order to ensure long-term, reliable operation and maximum throughput in hygienic and washdown zones, stainless steel sensors from SICK must satisfy five criteria:

- Chemical resistance
- Hygienic design and materials
- Thermal resistance
- Tightness
- Market standards

Chemical resistance

A stainless steel sensor by SICK is resistant to high-pressure cleaning, cleaning with foam or P3 cleaning agents, and subsequent rinsing. The PMMA front screen, the LEDs, the teach-in pushbutton with stainless steel membrane and the PTFE sealing ring are resistant to all cleaning agents typically used in this industry.

Hygienic design and materials

The stainless steel sensors designed for hygienic applications meet the requirements of applicable standards and guidelines for hygiene. SICK engineers are breaking new ground in hygienic design. Thanks to the use of O-rings, stainless steel sensors no longer have drill holes and metallic contact surfaces. The hygienic mounting system developed by SICK is also characterized by the fact that there are no gaps, dead zones, and undercuts. Food-safe and/or FDA-compliant materials have product properties that are suitable for use in the food and beverage industry.

Thermal resistance

Stainless steel sensors must be able to withstand dramatic changes in temperature resulting from cleaning with water at approx. 80 °C in a cold environment at between 5 and 10 °C, for example. Constant changes in temperature cause what is known as the pump effect: The differences in pressure “suck” moisture into the device. With SICK’s design experience and proper selection of highly durable plastics and stainless steel materials, the tightly sealed housing suppresses the pump effect.

Tightness

SICK stainless steel sensors have been proving their worth in practical applications for many years. A laser-welded teach-in membrane made from stainless steel, sealed electrical male connectors or cables, and the precise integration of the display window and front screen into the housing form the basis for the tightness of the sensors. With a water shock test, tests for enclosure ratings IP 66, IP 67, IP 68, and IP 69K, and a long-life test, tightness is tested on a regular basis.

Market standards

Thanks to careful material selection and considered design and build, Inox sensors from SICK meet all legal requirements and are aligned with the following standards and directives:

- DIN 10516: 2009-05
- DIN EN ISO 14159: 2008-07
- DIN EN 1672-2: 2005 + A1
- Machinery Directive 2006/42/EC
- Directives 1935/2004/EC and 10/2011
- Designed according to EHEDG guidelines
- ECOLAB-certified
- Materials meeting FDA requirements

You can find a selection of suitable products for hygienic and washdown zones on page B-44.

Hygienic and washdown zones

Hygienic and washdown zones

B

Product selection for hygienic and washdown zones

	Housing properties							Sensor properties		Optical properties			Page
	Rectangular	Cylindrical	Stainless steel: Washdown	Stainless steel: Hygiene	VISTAL®	PTFE coating	IP 69K	AutoAdapt	IO-Link	Red laser light	PinPoint LED	SIRIC®	
W4-3 PTFE	■					PTFE ★	IP 69K ★				★	SIRIC®	F-250
W4S-3 Inox	■		STAINLESS STEEL				IP 69K ★		IO-Link		★	SIRIC®	F-298
W4S-3 Inox Glass	■		STAINLESS STEEL				IP 69K ★	★			★	SIRIC®	F-312
W4S-3 Inox Hygiene	■			STAINLESS STEEL			IP 69K ★				★	SIRIC®	F-320
W4S-3 Inox Hygiene Glass	■			STAINLESS STEEL			IP 69K ★	★			★	SIRIC®	F-334
W4SL-3V NEW	■		STAINLESS STEEL				IP 69K ★			★		SIRIC®	F-342
W4SLG-3V NEW	■		STAINLESS STEEL				IP 69K ★	★	IO-Link	★		SIRIC®	F-350
W4SL-3H NEW	■			STAINLESS STEEL			IP 69K ★			★		SIRIC®	F-358
W4SLG-3H NEW	■			STAINLESS STEEL			IP 69K ★	★	IO-Link	★		SIRIC®	F-364
W8 Inox	■		STAINLESS STEEL				IP 69K ★						F-386
W9-3	■				VISTAL®		IP 69K ★				★	SIRIC®	G-448
W9-3 Glass	■				VISTAL®		IP 69K ★	★			★	SIRIC®	G-462
W9L-3 NEW	■				VISTAL®		IP 69K ★			★		SIRIC®	G-470
W9LG-3 NEW	■				VISTAL®		IP 69K ★	★		★		SIRIC®	G-484
MH15V		■	STAINLESS STEEL				IP 69K ★				★		I-714
V18V		■	STAINLESS STEEL				IP 69K ★						I-732

8015327/2014-02-08
Subject to change without notice

ZoneControl

ZoneControl

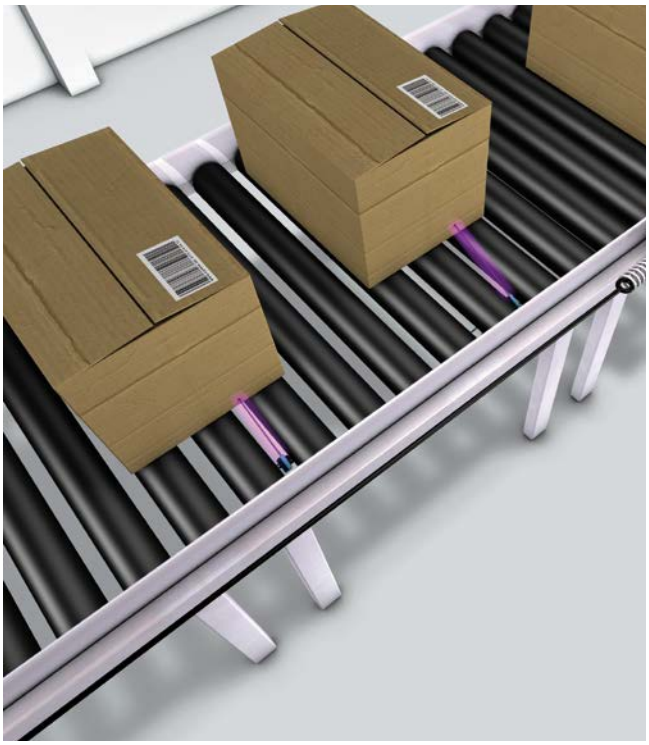

ZoneControl solutions are used to control the flow of goods on conveyor belts (zero pressure accumulation). Regardless of whether the belt is powered pneumatically or by motorized rollers, ZoneControl solutions from SICK eliminate the needs for a programmable logic controller (PLC) or another external control system, and can do without a laptop and expensive cabling.

Each product contains one of two types of start-up logic: single feed (with or without sleep function) and block feed (slug). Which start-up logic is used depends on the requirements of the application.

When it comes to mounting options, versions are available that are designed for each type of installation situation: mounting between the rollers, on the side frame, and over the belt.

Installing ZoneControl solutions is plug-and-play: The sensors are connected in series, installed, and then connected to the pneumatic line or the motorized rollers.

There is no need for extensive and cost-intensive installation and cabling work.

You can find additional information on ZoneControl in Chapter E: MultiTask photoelectric sensors, page E-106.

You can find products for ZoneControl in the MultiTask photoelectric sensors chapter, page E-148.

Detecting transparent objects

Detecting transparent objects

B

Clear plastic packaging, bottles made of glass or PET, vials and droppers, flat and hollow glass, plastic wrap for securing loads on pallets – providing appropriate solutions that can reliably detect transparent materials is a difficult task for automation specialists. SICK presents two approaches when it comes to solving this challenge – and once again demonstrates its innovative edge.

Reliably detect transparent objects – with a reflector ...

SICK's broad range of photoelectric retro-reflective sensors covers virtually all expectations, requirements, and tasks in the world of automation. Reflectors are the indispensable counterpart for each photoelectric retro-reflective sensor. Together they form a reliable functional unit. Reliable detection of objects is only guaranteed, including under critical application conditions, if both components are optimally coordinated with one another (you can find additional information on reflectors in the Accessories chapter, page L-889).
With the aid of outstanding SICK technologies such as AutoAdapt (continuous threshold adaptation) or the autocollimation principle, highly transparent objects can be reliably detected even if they have a very low signal attenuation in the light path.

The comprehensive SICK product portfolio for detecting transparent objects offers:

- AutoAdapt – continuous threshold adaptation from SICK
- The latest SIRIC® technology and IO-Link capability
- A range of housing styles
- Variants for use in hygienic and washdown zones
- Rugged device versions

You can find additional information on AutoAdapt on page B-30.

In addition to the photoelectric sensors with reflectors that are usually used, solutions without reflectors now also allow for reliable detection of transparent objects. It's crystal clear: The SICK portfolio is always the right choice – for reliable packaging, beverage or glass applications.

... or without a reflector. NEW

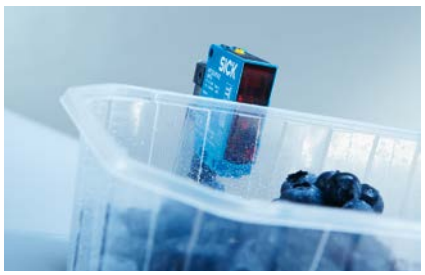

Out with reflectors – in with machines
Harsh environmental conditions can significantly hinder the effectiveness of reflectors. In addition to special machine designs that can leave little space for mounting, aggressive cleaning agents, for instance, can impair the performance of reflectors and even cause them to break. With this in mind, SICK offers state-of-the-art sensor technologies that allow you to eliminate the reflector. Thanks to new technologies, TranspaTect MultiTask photoelectric sensors are able to detect transparent and semitransparent trays without the need for reflectors.

And with the addition of the AutoAdapt function, the TranspaTect sensor offers maximum reliability in situations where contamination may occur.
Other photoelectric proximity sensors from the SICK portfolio also allow users to benefit from the advantages that the detection of transparent objects without reflectors brings. For example, with the MultiTask photoelectric sensors, MultiLine Sensor, and MultiPac for the detection of packaging units with highly critical and transparent surfaces.

The benefits of SICK's innovative, reflector-free sensor solutions at a glance:

- Saves time and costs since there is no need for the additional installation of a reflector
- New levels of machine design freedom since the defined background can be designed into the environment of the machine, unlike a reflector
- High operational safety since the photoelectric sensor is able to continuously detect objects, even if the background becomes contaminated

You can find a selection of suitable products for the detection of transparent objects on page B-48.

Detecting transparent objects

Detecting transparent objects

B

Product selection for detecting transparent objects

	Housing properties					Sensor properties			Optical properties				Page
	Rectangular	Cylindrical	Stainl. steel: Wash-down	Stainl. steel: Hygiene	VISTAL®	Fibers	AutoAdapt	IO-Link	Red laser light	PinPoint LED	Light array	SIRIC®	
Reflex Array	■	○	STAINLESS STEEL	STAINLESS STEEL	VISTAL®		★	IO-Link		★	★	SIRIC®	E-134
TranspaTect NEW	■	○	STAINLESS STEEL	STAINLESS STEEL	VISTAL®		★	IO-Link		★		SIRIC®	E-142
G6	■	○	STAINLESS STEEL	STAINLESS STEEL	VISTAL®			IO-Link				SIRIC®	F-196
W2SG-2 NEW	■	○	STAINLESS STEEL	STAINLESS STEEL	VISTAL®		★	IO-Link		★		SIRIC®	F-232
W4-3 Glass	■	○	STAINLESS STEEL	STAINLESS STEEL	VISTAL®		★	IO-Link		★		SIRIC®	F-254
W4S-3 Glass	■	○	STAINLESS STEEL	STAINLESS STEEL	VISTAL®		★	IO-Link		★		SIRIC®	F-272
W4SLG-3	■	○	STAINLESS STEEL	STAINLESS STEEL	VISTAL®		★	IO-Link	★			SIRIC®	F-290
W4S-3 Inox Glass	■	○	STAINLESS STEEL	STAINLESS STEEL	VISTAL®		★	IO-Link		★		SIRIC®	F-312
W4S-3 Inox Hygiene Glass	■	○	STAINLESS STEEL	STAINLESS STEEL	VISTAL®		★	IO-Link		★		SIRIC®	F-334
W4SLG-3V NEW	■	○	STAINLESS STEEL	STAINLESS STEEL	VISTAL®			IO-Link	★			SIRIC®	F-350
W4SLG-3H NEW	■	○	STAINLESS STEEL	STAINLESS STEEL	VISTAL®			IO-Link	★			SIRIC®	F-364
W8G	■	○	STAINLESS STEEL	STAINLESS STEEL	VISTAL®			IO-Link				SIRIC®	F-380
W100-2 NEW	■	○	STAINLESS STEEL	STAINLESS STEEL	VISTAL®			IO-Link				SIRIC®	F-404
G10 NEW	■	○	STAINLESS STEEL	STAINLESS STEEL	VISTAL®			IO-Link		★		SIRIC®	G-430
W9-3 Glass	■	○	STAINLESS STEEL	STAINLESS STEEL	VISTAL®		★	IO-Link		★		SIRIC®	G-462
W9LG-3 NEW	■	○	STAINLESS STEEL	STAINLESS STEEL	VISTAL®		★	IO-Link	★			SIRIC®	G-484
W11G-2	■	○	STAINLESS STEEL	STAINLESS STEEL	VISTAL®			IO-Link				SIRIC®	G-504
W12G	■	○	STAINLESS STEEL	STAINLESS STEEL	VISTAL®		★	IO-Link		★		SIRIC®	G-520
GR18S		■	STAINLESS STEEL	STAINLESS STEEL	VISTAL®			IO-Link		★		SIRIC®	I-698
V18V		■	STAINLESS STEEL	STAINLESS STEEL	VISTAL®			IO-Link				SIRIC®	I-732
WLL170-2 with LL3	■	○	STAINLESS STEEL	STAINLESS STEEL	VISTAL®	■		IO-Link			★	SIRIC®	J-790
WLL180T with LL3	■	○	STAINLESS STEEL	STAINLESS STEEL	VISTAL®	■		IO-Link			★	SIRIC®	J-798

8015327/2014-02-08
Subject to change without notice

Detecting perforated objects

Detecting perforated objects

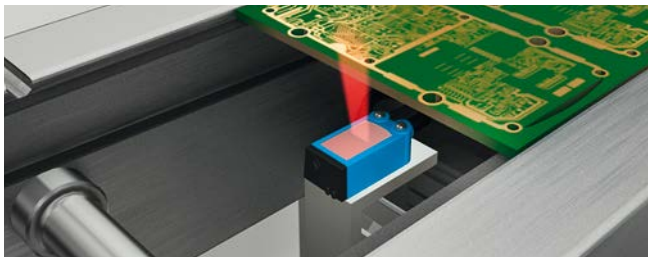

The special optical design for the photoelectric proximity sensor is critical for reliably detecting perforated objects such as mesh boxes. Using a line-shaped light spot, gaps in the object being detected are suppressed, preventing multiple switching.

With conventional photoelectric proximity sensors, the tiny light spots are often unable to fully cover the gaps in the perforated objects, meaning that the same object is detected several times. Until now, it was only possible to compensate for this problem by carrying out complex software adaptation or logically linking several photoelectric proximity sensors.
Sensors with a line-shaped light spot are therefore much more cost- and time-efficient. The light spot is modified in such a way that a highly visible line-shaped light spot is displayed on the object. This line geometry ensures that the sensor reliably detects corners, crosspieces, and gaps on the object as uniform surfaces, meaning that each object is only detected once. The sensor therefore also only emits one switching signal to the control system of the automatic conveying equipment.

Product selection for detecting perforated objects

	Housing properties		Sensor properties		Optical properties					Page
	Rectangular	IP 69K	Fibers	IO-Link	PinPoint LED	Infrared light	Light array	Line-shaped light spot	SIRIC®	
MultiLine Sensor	✓	IP 69K		IO-Link	✓	–		✓	SIRIC®	E-124
Reflex Array	✓	IP 69K		IO-Link	✓	–	✓		SIRIC®	E-134
W2S-2 NEW	✓	IP 69K		IO-Link	✓	–		✓	SIRIC®	F-216
W4-3	✓	IP 69K		IO-Link	✓	–		✓	SIRIC®	F-238
W12-3	✓	IP 69K		IO-Link	✓	–		✓	SIRIC®	G-528
W14-2	✓	IP 69K		IO-Link		✔		✓	SIRIC®	G-544
WLL170-2 with LL3	✓	IP 69K	✓	IO-Link		–	✓		SIRIC®	J-790
WLL180T with LL3	✓	IP 69K	✓	IO-Link		–	✓		SIRIC®	J-798

Detecting small objects

Detecting small objects

B

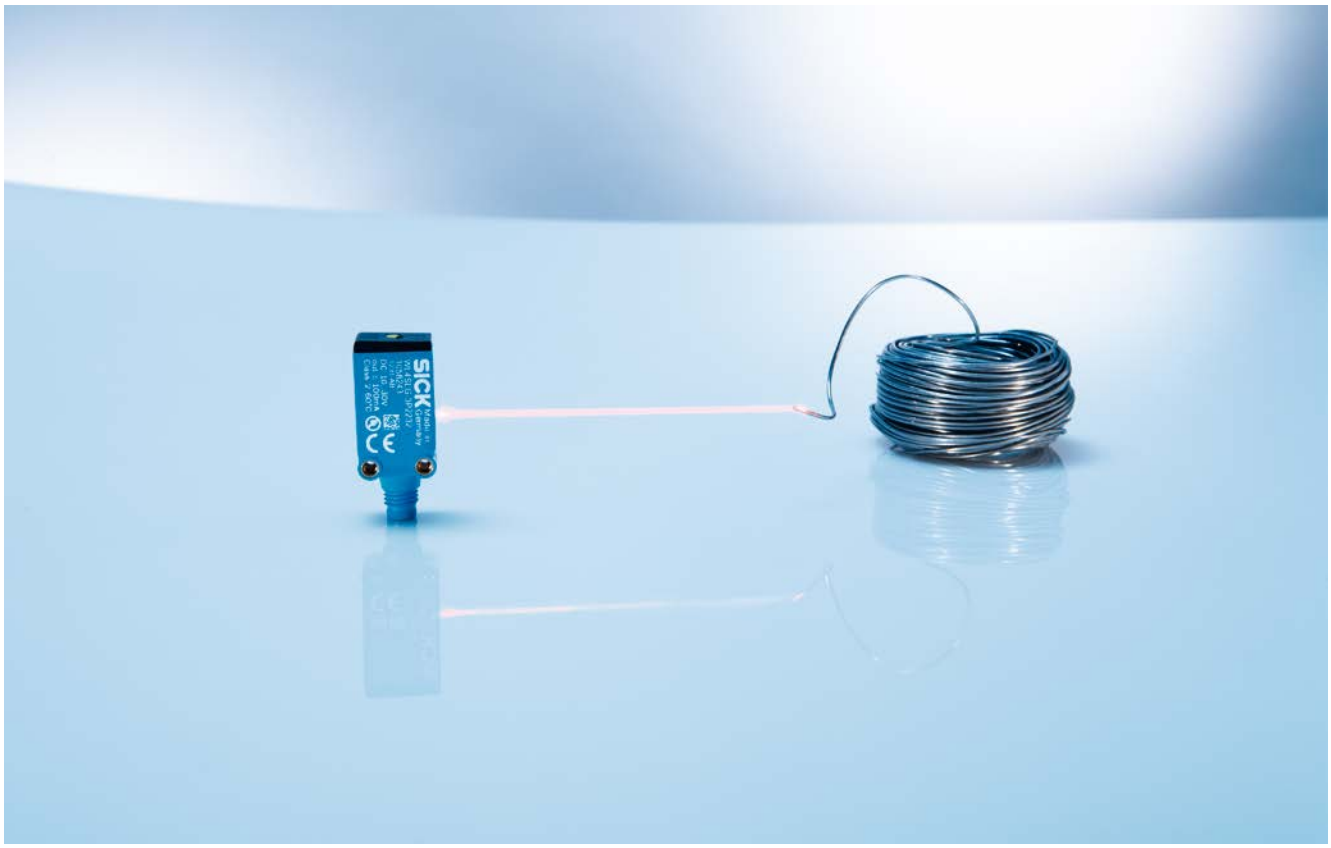

The reliable detection of small objects represents a major challenge in the automation industry – particularly if these objects are also packed flat or in transparent material. Laser photoelectric sensors, fiber-optic sensors, or photoelectric sensors with focused optics are able to detect small objects reliable. An extremely small light spot provides the ideal starting point for precise object and feature detection in automation. It makes the sensors ideal for pinpoint accurate position, presence, overhang and height checks involving the smallest objects, even under critical light conditions. The precise laser light spot supports switching with maximum accuracy, thus providing the basis not only for optimum product quality but also for reduced machine downtime as there are fewer switching errors. Fiber-optic sensors and suitable fibers enable small objects up to 15 µm to be detected.

Product selection for detecting small objects

	Housing properties						Sensor properties				Optical properties				Page
	Rectangular	Cylindrical	Stainl. steel: Wash-down	Stainl. steel: Hygiene	VISTAL®	IP 69K	Fibers	Switching frequency ≥ 2 kHz	AutoAdapt	IO-Link	Red laser light	PinPoint LED	Focused optics	SIRIC®	
G2S	■											★	★		F-186
W2S-2 NEW	■									IO-Link		★	★	SIRIC®	F-216
W4-3	■											★	★	SIRIC®	F-238
W4SL-3 NEW	■									IO-Link	★			SIRIC®	F-278
W4SLG-3 NEW	■								★		★			SIRIC®	F-290
W4SL-3V NEW	■		STAINLESS STEEL			IP 69K ★					★			SIRIC®	F-342
W4SLG-3V NEW	■		STAINLESS STEEL			IP 69K ★				IO-Link	★			SIRIC®	F-350
W4SL-3H NEW	■			STAINLESS STEEL		IP 69K ★					★			SIRIC®	F-358
W4SLG-3H NEW	■			STAINLESS STEEL		IP 69K ★				IO-Link	★			SIRIC®	F-364
W8 Laser	■							≥ 2 kHz ★			★				F-398
W100 Laser	■							≥ 2 kHz ★			★				F-412
W9-3	■				VISTAL®	IP 69K ★						★	★	SIRIC®	G-448
W9L-3 NEW	■				VISTAL®	IP 69K ★					★			SIRIC®	G-470
W9LG-3 NEW	■				VISTAL®	IP 69K ★			★		★			SIRIC®	G-484
W12-2 Laser	■							≥ 2 kHz ★			★			SIRIC®	G-510
W12-3	■					PTFE ★				IO-Link		★	★	SIRIC®	G-528
W27-2 Laser	■										★			SIRIC®	H-610
W280L-2 Long Range NEW	■										★				H-666
ELF		■											★		I-692
V18 Laser		■									★				I-724
V180-2		■										★			I-742
WLL170-2 with LL3	■						■	≥ 2 kHz ★					★		J-790
WLL180T with LL3	■						■	≥ 2 kHz ★					★		J-798

Detecting uneven, shiny objects

Detecting uneven, shiny objects

B

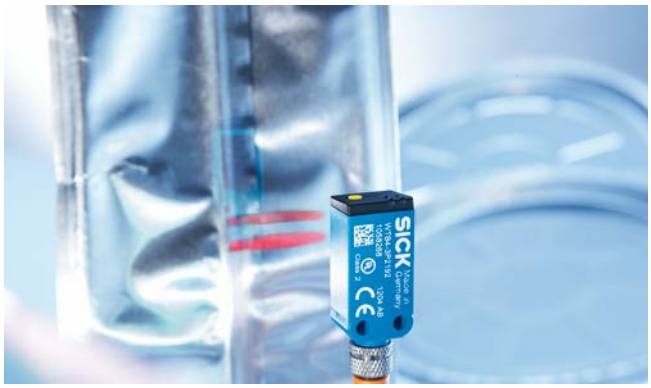

The detection of shiny, uneven surfaces presents a particular challenge. Just like when detecting small objects, a small, precise light spot is required to achieve reliable detection results in the automotive industry, for example. Problems arise, however, due to shiny, uneven surfaces, and for surfaces that are coated in oil (e.g., metal sheets). For the detection of shiny and irregularly shaped objects, which can be found in the packaging industry, for instance, photoelectric sensors with a line-shaped light spot are particularly well suited for these types of applications.

Product selection for detecting uneven, shiny objects

	Housing properties	Sensor properties	Optical properties						Page
	Rectangular	IO-Link	PinPoint LED	Infrared light	Line-shaped light spot	Light array	V-optics	SIRIC®	
MultiLine Sensor	■	IO-Link	★	–	★			SIRIC®	E-124
MultiPac	■	IO-Link		–				SIRIC®	E-130
Reflex Array	■	IO-Link	★	–		★		SIRIC®	E-134
TranspaTect NEW	■	IO-Link	★	–				SIRIC®	E-142
W2S-2 NEW	■	IO-Link	★	–	★		★	SIRIC®	F-216
W4-3	■	IO-Link	★	–	★		★	SIRIC®	F-238
W12-3	■	IO-Link	★	–	★			SIRIC®	G-528
W14-2	■	IO-Link		✔	★			SIRIC®	G-544
WLL170-2 with LL3	■	IO-Link		–	★	★		SIRIC®	J-790
WLL180T with LL3	■	IO-Link		–	★	★		SIRIC®	J-798

Detecting objects wrapped in film

Detecting objects wrapped in film

Reliably detecting six-packs wrapped in PET film on conveying lines is no easy task. Yet the photoelectric sensors from SICK have mastered this challenge and guarantee an unparalleled level of detection reliability.
Dual receivers, powerful LEDs, and a special evaluation function enable the detection of very shiny and uneven surfaces. They are a future-proof solution for efficiently checking and controlling objects, such as packaging units being transported on single or multi-track conveying lines. With mounting heights up to 500 mm above the conveying line, an extremely wide range of packaging unit types and heights can also be detected with only one fixed sensor position. With different packaging unit heights, the mechanical position adjustment that was often required becomes unnecessary, significantly reducing effort and expense for users.

Product selection for detecting objects wrapped in film

	Housing properties			Optical properties		Page
	Rectangular	Cylindrical	IP 69K	PinPoint LED	Line-shaped light spot	
MultiLine Sensor	✓		IP 69K	✓	✓	E-124
MultiPac	✓		IP 69K			E-130
G10 NEW	✓		IP 69K	✓		G-430
W11-2	✓		IP 69K			G-492
W12-3	✓		IP 69K	✓	✓	G-528
W14-2	✓		IP 69K			G-544
W23-2	✓		IP 69K			H-580
W27-3	✓		IP 69K			H-616
W15		✓	IP 69K	✓		I-766

Detecting objects with position tolerances

Detecting objects with position tolerances

B

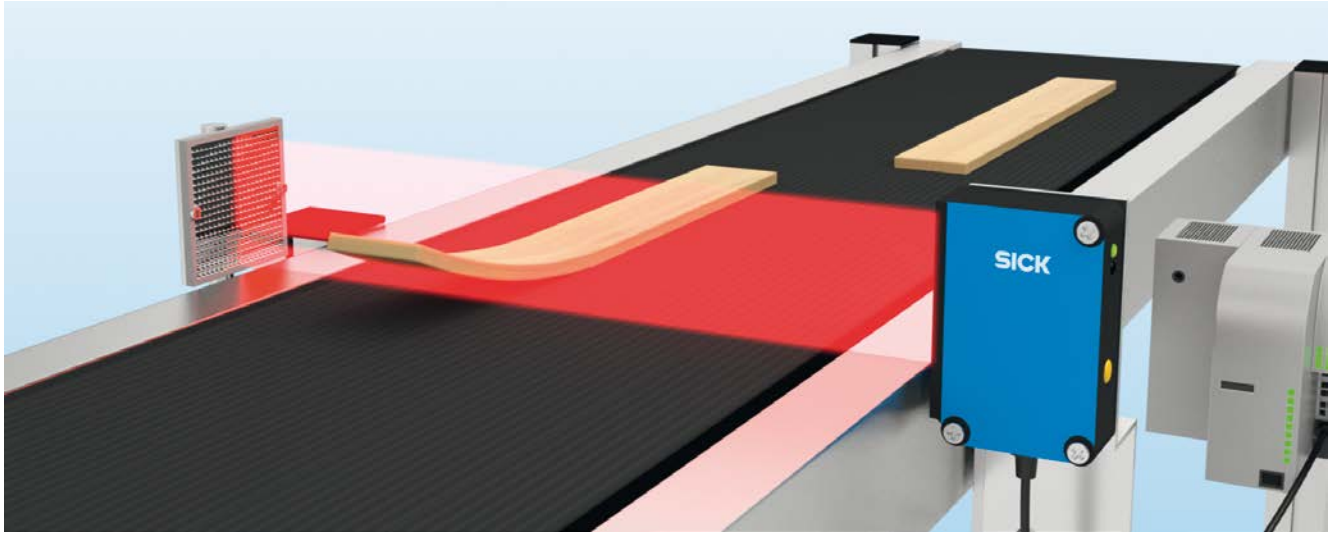

In a wide range of industries, solutions are used for the detection of misshapen objects or objects of varying height. This often leads to high costs, especially through complex and expensive installation. Reliably detecting the leading edge in objects of varying height generally requires the installation of two photoelectric sensor — one on top of the other.

A similar situation occurs when detecting flat and misshapen objects on the same belt – with the added problem of expensive and time-consuming cabling.
The solution is provided by sensors with a special feature – the light array. It enables all objects from a certain minimum size to be detected irrespective of their position.

Product selection for detecting objects with position tolerances

	Housing properties		Sensor properties			Optical properties						Page
	Rectangular	IP 69K	Fibers	Switching frequency ≥ 2 kHz	IO-Link	PinPoint LED	Infrared light	Light array	Line-shaped light spot	V-optics	SIRIC®	
Reflex Array	✓	69K		≥ 2 kHz	IO-Link	★	–	★			SIRIC®	E-134
W2S-2 NEW	✓	69K		≥ 2 kHz	IO-Link	★	–		★		SIRIC®	F-216
W4-3	✓	69K		≥ 2 kHz	IO-Link	★	–		★	★	SIRIC®	F-238
W12-3	✓	IP 69K ★		≥ 2 kHz	IO-Link	★	–		★		SIRIC®	G-528
W14-2	✓	69K		≥ 2 kHz	IO-Link		✔		★		SIRIC®	G-544
WLL170-2 with LL3	✓	69K	✓	≥ 2 kHz ★	IO-Link		–	★	★		SIRIC®	J-790
WLL180T with LL3	✓	69K	✓	≥ 2 kHz ★	IO-Link		–	★	★		SIRIC®	J-798

8015327/2014-02-08
Subject to change without notice

Detecting high-speed objects

Detecting high-speed objects

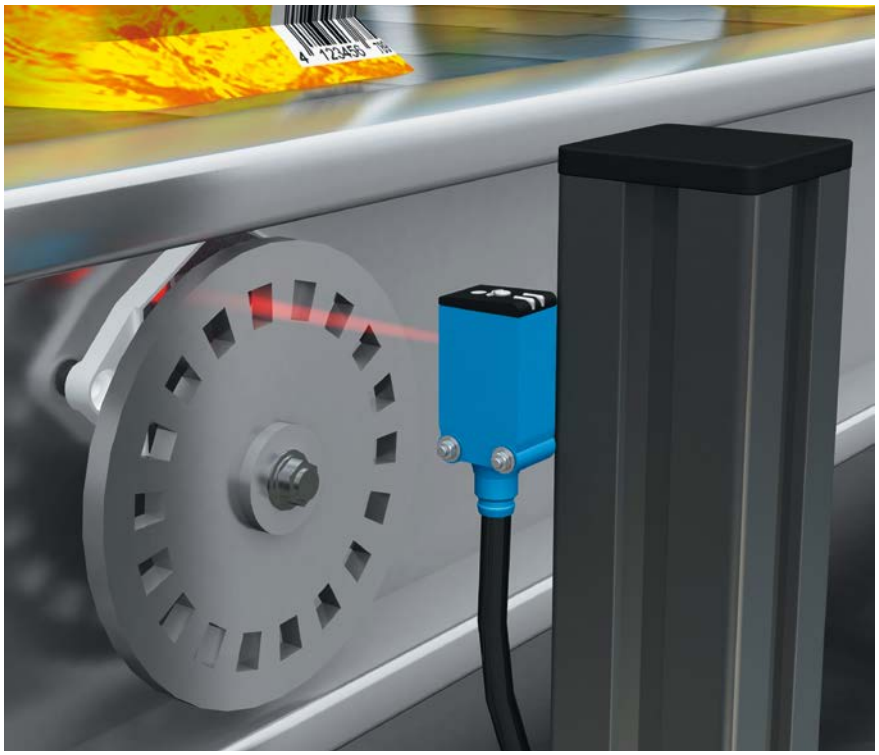

Extremely fast-paced manufacturing processes require specially adapted sensor solutions. Very high switching frequencies up to 31.2 kHz enable SICK sensors to react with lightning-fast speed and excellent positioning accuracy – especially when it matters most.

The benefit to you: A precise solution for your high-speed processes.

Product selection for detecting high-speed objects

	Housing properties		Sensor properties		Optical properties			Page
	Rectangular	IP 69K	Fibers	Switching frequency ≥ 2 kHz	Red laser light	Light array	SIRIC®	
W4S-3	■	IP 69K		≥ 2 kHz ★			SIRIC®	F-260
W8	■	IP 69K		≥ 2 kHz ★			SIRIC®	F-372
W8 Laser	■	IP 69K		≥ 2 kHz ★	★		SIRIC®	F-398
W100 Laser	■	IP 69K		≥ 2 kHz ★	★		SIRIC®	F-412
W12-2 Laser	■	IP 69K ★		≥ 2 kHz ★	★		SIRIC®	G-510
WLL170-2 with LL3	■	IP 69K	■	≥ 2 kHz ★		★	SIRIC®	J-790
WLL180T with LL3	■	IP 69K	■	≥ 2 kHz ★		★	SIRIC®	J-798

Explosive areas

Explosive areas

B

Potentially explosive atmospheres can arise wherever dust, flammable gases, or flammable liquids are manufactured, transported, processed, or stored. An explosion can occur if three factors come together at the same time:

- A flammable substance, e.g., in the form of gas, vapor, mist, or dust, is present
- Sufficient oxygen is present (e.g., in the ambient air)
- There is an ignition source. In addition to sparks, this can also include hot surfaces.

SICK offers sensors that have been developed especially for explosive areas. Based on directive 94/9/EC (ATEX), these sensors are designed in accordance with the relevant standards. The devices can be used in the categories 2G/2D or 3G/3D, depending on their design.

Responsibility of the sensor manufacturer	Responsibility of the machine manufacturer					
Category	Can be used in zone (gas)	Can also be used in zone (gas)	Can be used in zone (dust)	Can also be used in zone (dust)	Definition (94/9/EC) Potentially explosive atmospheres are present	Certification by
1G/1D	0 (0)	1 and 2	20 (10)	21 and 22	Always, for long periods, or often	Notified body
2G/2D	1 (1)	2	21 (11); zone 22 “conductive dust”	22	Occasionally	Notified body
3G/3D	2 (2)	–	22; zone “non-conductive dust” (no equivalent)	22	Occasionally	Notified body

G = gas, D = dust; ( ) = older code in parentheses.

W18-3 Ex G-556
W24-2 Ex H-602
W27-3 Ex H-632

Zero gap detection

Zero gap detection

NEW

B

Zero gap detection is a challenge for sensor solutions in the packaging industry. Ideally, packaging items are correctly grouped in lines to prevent inefficient idling, machine downtime and loss of quality due to crashes. With the aid of a technological world first, SICK can now make such stable, fast, and efficient production processes possible – and all with maximum quality.

Delta-S-Technology® guarantees that the sensor accurately detects the transition between successive packaging items or work pieces. There are no more product jams and package hold ups. And there is no need to separate items before grouping them, reducing mechanical costs. This optimizes product flow and saves resources.

And if that wasn't enough, the sensor solution from SICK is optimally designed for the packaging items typically found in today's packaging industry. Pre-configured, automated sensors detect rectangular and prism-shaped packaging items and folding boxes. All rounded off by IO-Link-compatible sensors, providing maximum flexibility.

You can find additional information on Delta-S-Technology® in the MultiTask photoelectric sensors chapter, page E-103.

C

Integrating the lowest field level into communication within a machine makes it possible to achieve a consistent flow of information throughout the automation pyramid. Right down to the smallest elements, such as sensors, actuators, and drives.

Incorporating process data like pressure, temperature, flow, end position, speed, and output state, for example, creates more opportunities for helping automation solutions work at the peak of their capabilities.

With Smart Sensor Solutions, SICK offers innovative sensor technology that allows you to take advantage of innovative additional functions.

Integrating Smart Sensor Solutions seamlessly into automation networks enables you to increase the flexibility, reliability, and efficiency of your machines, while also reducing costs.

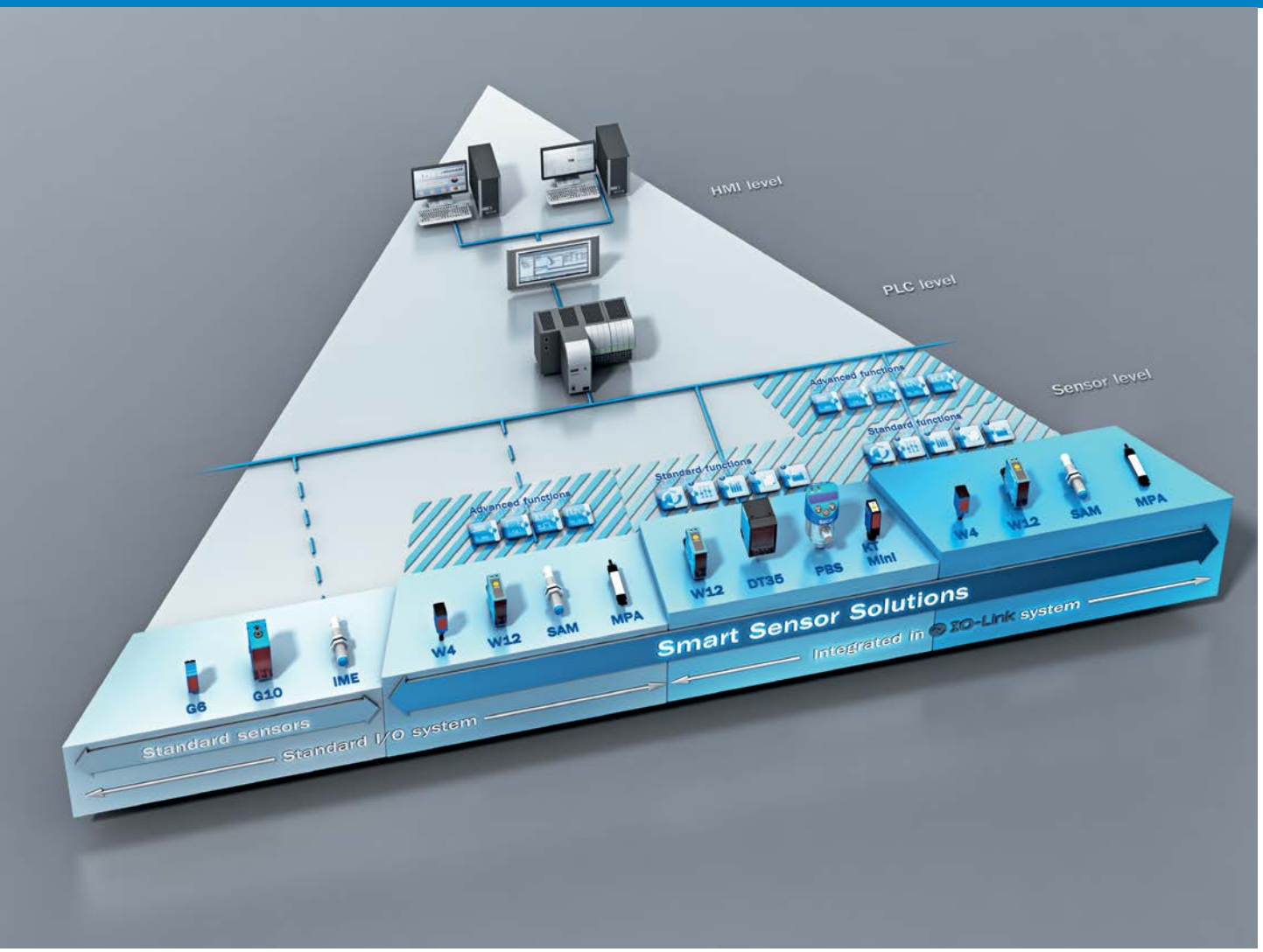

C

C

The benefits of seamlessly integrating Smart Sensor Solutions into automation networks are clear: Increasing machine flexibility, reliability, and efficiency, while reducing costs.

Due to continual performance improvements, sensors can be used in even more applications in machine design or industrial automation and are able to provide more than just discrete switching signals.

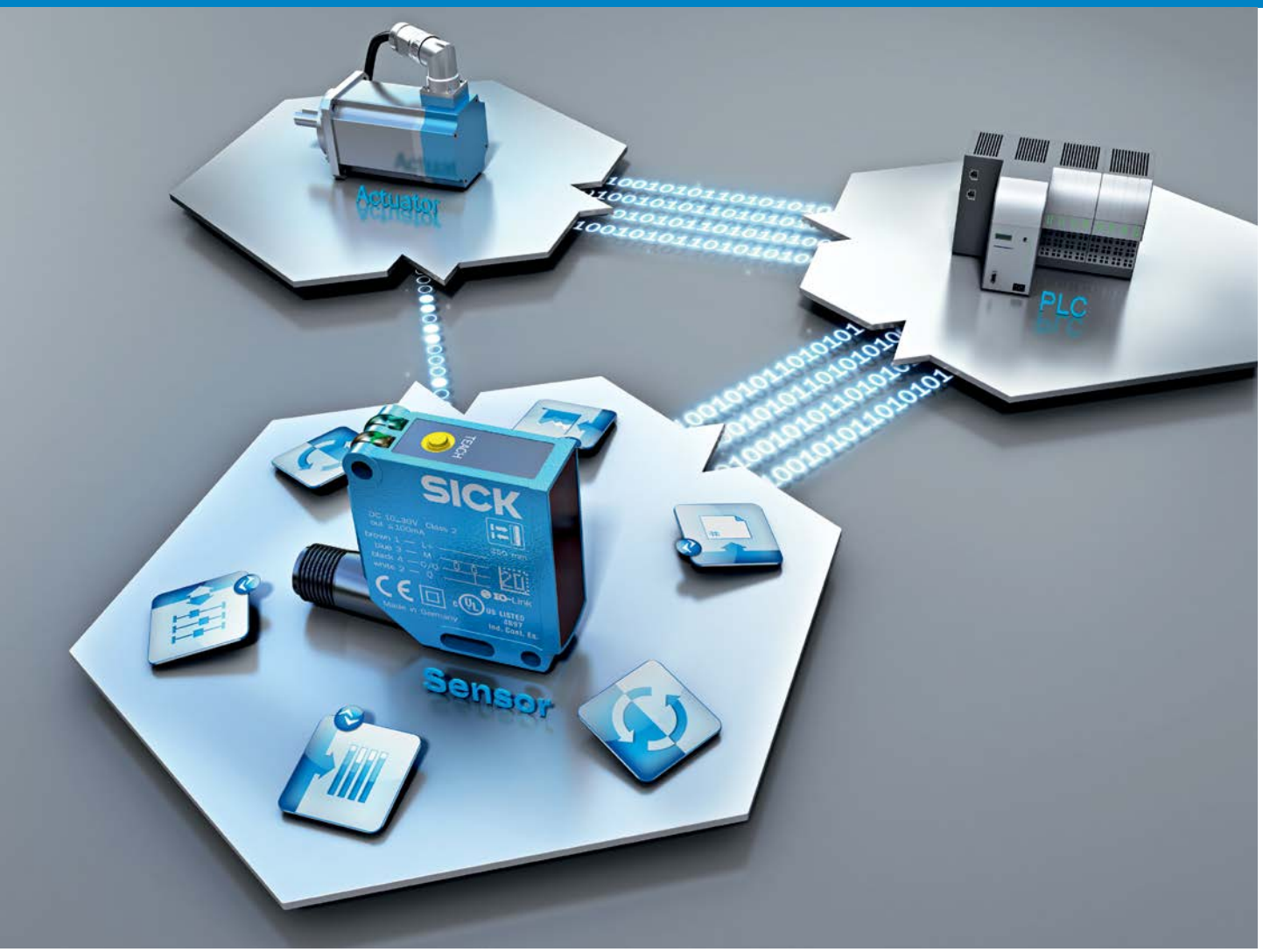

Standard functions

C

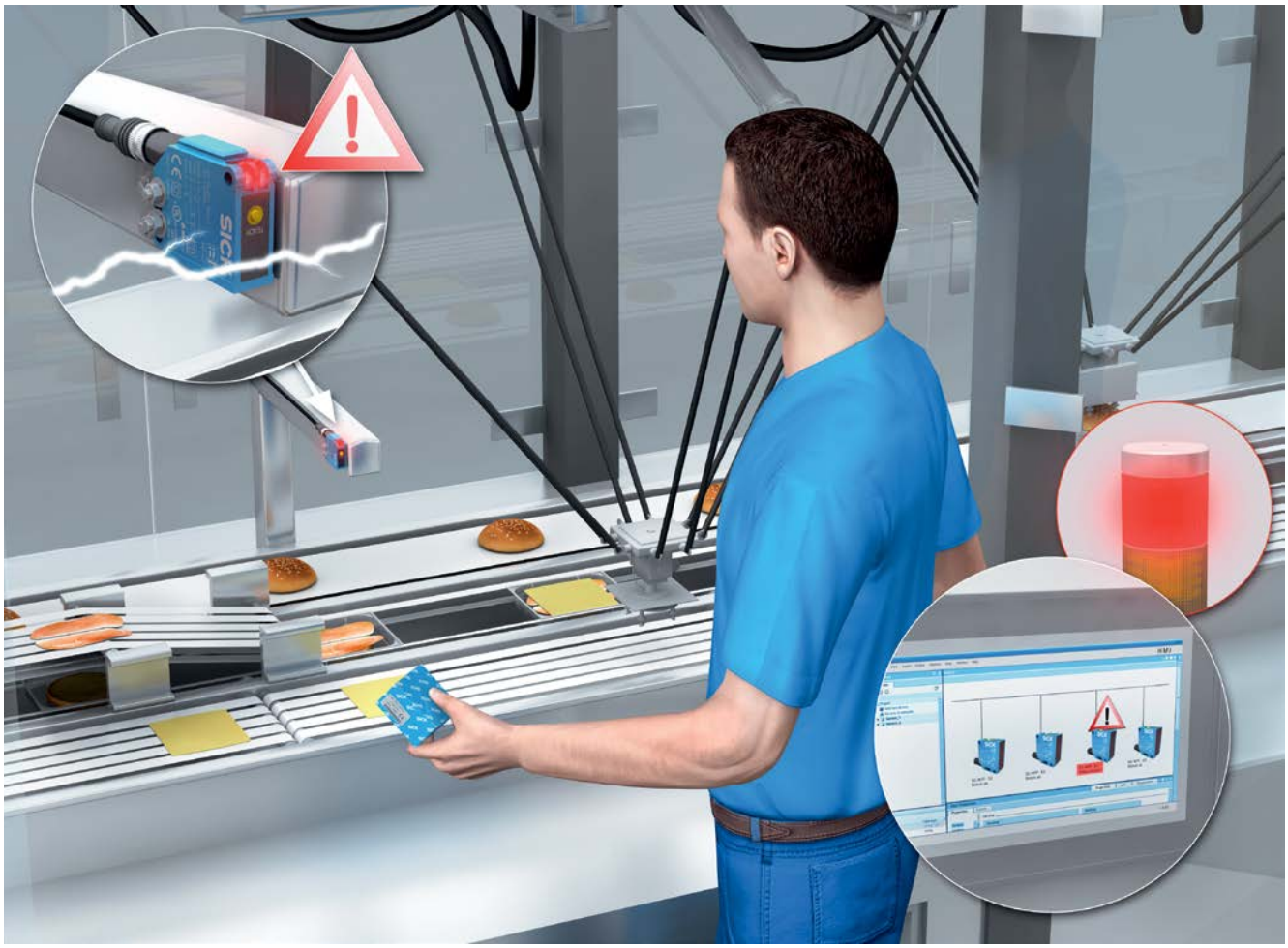

Easy device replacement

Sensors are used at the heart of manufacturing processes, including those taking place in harsh environments. As a result, they are exposed to exceptional levels of stress from high temperatures, vibrations, mechanical impact loads, or contamination. After being subjected to these harsh conditions over a long period of time, these sensors will need to be replaced.
High-performance sensors are able to reliably identify failures and report them locally via an LED display. This is useful for machine operators, as pinpointing the location of the defective sensor can be a laborious process if it is installed in a concealed place or if a system is using a large number of sensors.
After a sensor has been replaced, it needs to be configured specifically for the application (by pressing a teach-in button, for example). This can result in the loss of valuable production time.

The solution: Easy device replacement
Using SICK Smart Sensor Solutions, the automation systems can display the exact location of a failure on the human-machine interface. Once the device has been replaced, the automation system automatically recognizes that a new sensor has been connected. The application-specific parameters, such as basic configuration settings, are written to the sensor quickly and reliably. The result is an efficient and documented sensor replacement process.

Fields of application:

- Systems and machines with high numbers of sensors and which are operated by untrained personnel
- Manufacturers who provide your machines with maintenance contracts and a spare parts service

8015327/2014-02-08
Subject to change without notice

Machine reports a failure

- The failure is reported on the operating terminal of the control system
- The failure and its assessment can be viewed on the terminal
- The sensor type and its location are displayed

Easy integration thanks to IO-Link technology and flexible machines and system adaptations

Precise localization of the sensor within the machine and system

C

Sensor is replaced

- Operating personnel replace the sensor
- No manual settings, such as sensing range, need to be made on the sensor

Even personnel who have not been trained can replace the sensors without the need for additional tools or instructions

Automatic configuration prevents incorrect settings

Machine is put into operation

- The automation system checks whether the new sensor is working correctly
- Settings are automatically taken from the automation system, and a record of the replacement process can be created
- The production process is restarted after minimal downtime by means of an acknowledgment on the operating terminal

Sensor replacement precisely documented

Reduced service work costs

Minimized downtime periods

Guaranteed machine throughput

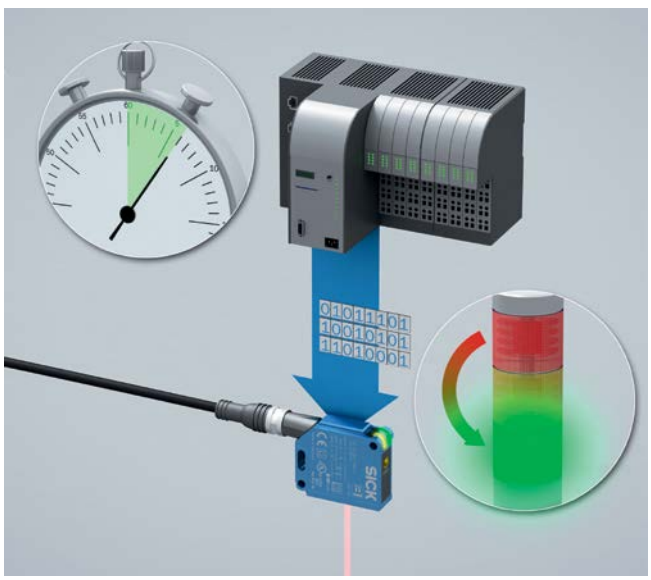

C

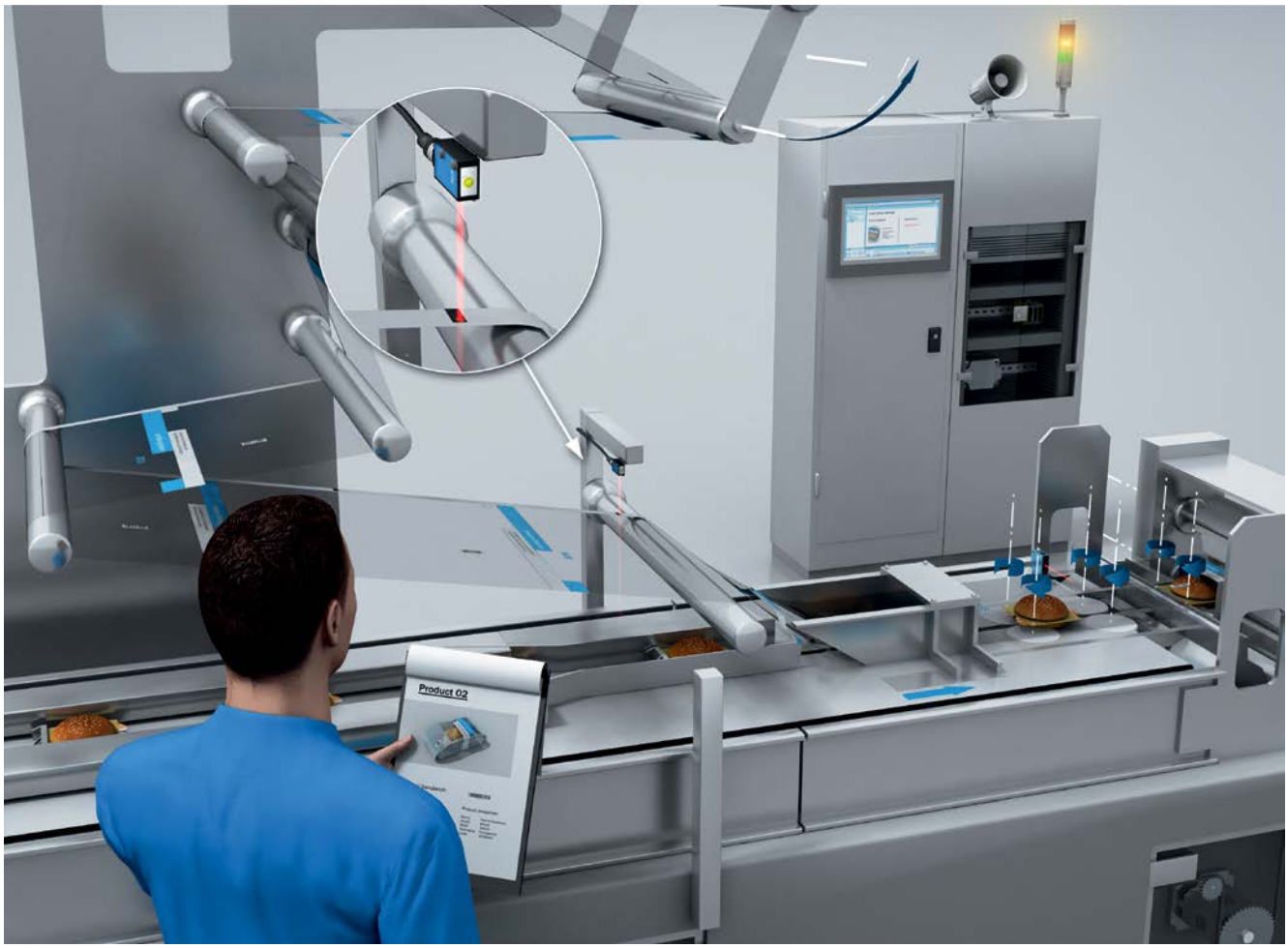

Flexible sensor adjustment

The flexibility of today's machines and systems aid in the development of a wide range of different product types. This is largely due to different order-specific requirements and configurations. As a result, products can differ significantly in terms of their shape and surface properties.
Although sensors are able to reliably detect various product shapes and surfaces, in many cases they require manual configuration for the sensing range or threshold settings to ensure they can offer the best possible performance. This can result in the loss of valuable production time.

The solution: Flexible sensor adjustment
Now, parameters for specific formats and configurations can be stored in the sensors or automation system without manual intervention. They can be activated quickly and automatically when a product change occurs – with full repeatability. The automation system provides the sensor with optimum application-specific parameters for the manufacturing process or the product being manufactured, such as the sensing range, hysteresis, or threshold.
These production parameters are managed by a server, for example. They are activated by the operating personnel and transferred to the sensor quickly and reliably.

Fields of application:
- Systems and machines with high numbers of format changes, configurations, and product variants
- Machine manufacturers that only want sensor settings to be made by the PLC

Operating personnel receive a new production order

- The machine has to produce a new product
- The operator activates the new machine settings by pressing a button
- The application-specific sensor parameters are automatically loaded to the sensors

Automatic configuration prevents incorrect settings

C

Product-specific parameter settings

A number of factors determine what the best settings for the sensors are:

Shape and size

Sensing range and hysteresis

Color and contrast

Color and contrast threshold

Surface

ON and OFF delay

Machine is put into operation

- The system performs a self-test to ensure that the sensors are working correctly.
- The production process is restarted after a very short downtime by means of an acknowledgement on the operating terminal.

Less downtime when product changes take place

More machine flexibility

Increase in the variety of products a machine can handle

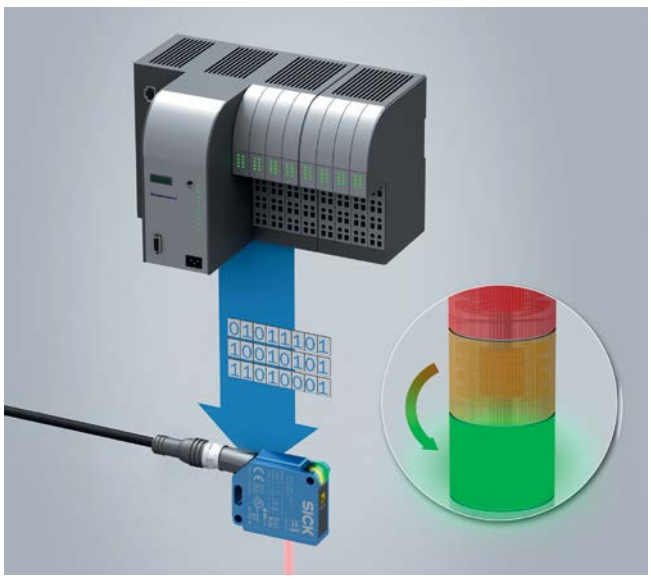

C

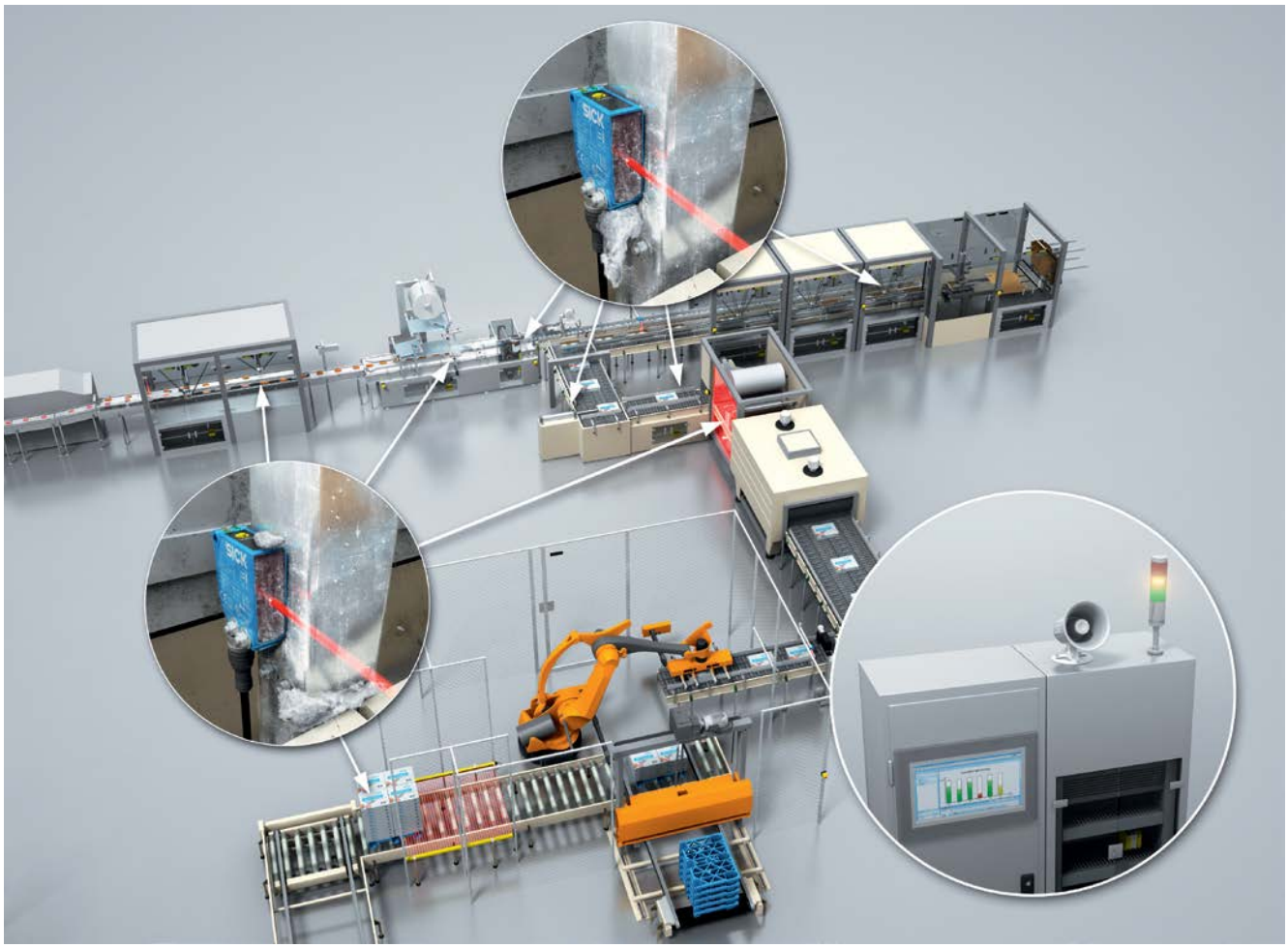

Condition monitoring and diagnostics

Sensors are often mounted in the most active production areas and are therefore highly exposed to the effects of their surroundings.
Dust, water, vibrations, and other harsh environmental conditions require cleaning and maintenance to be carried out to keep sensors performing reliably and to ensure the system or machine stays up and running. Environment-related sensor failures – as well as the downtime associated with them – are particularly unwelcome when systems are working at a high level of production capacity.

The solution: Condition monitoring and diagnostics
Thanks to integrated diagnostics and self-test options, sensors are able to provide information regarding the presence of contamination. The self-monitoring capabilities of the sensors enables preventive maintenance to be carried out using a precise maintenance plan. This ability to predict machine status even extends across area boundaries.
One example of these functions is remote maintenance, which provides a continuous way of identifying the areas requiring maintenance and allows maintenance work to be performed during a scheduled machine downtime, such as over the weekend.

Fields of application:
- Systems and machines that require frequent cleaning, use large numbers of concealed sensors, or operate in harsh environments
- Manufacturers who provide your machines with maintenance contracts and a spare parts service, and guarantee machine throughput

Preventive maintenance

- The staff member in charge of production creates a tailored maintenance plan using the condition monitoring data that is available, and hands this over to the service technician

+ Reduced risk of failure

+ Optimized maintenance and servicing periods

+ Service technician can prepare for maintenance using remote diagnostics

C

Maintenance is carried out on the system

- When a contract has been arranged, the service technician performs maintenance on the sensors at specified intervals

+ Trained personnel perform maintenance work

+ The service technician can identify critical sensor statuses and rectify any potential problems before a failure happens

+ Enhanced maintenance contracts that include process monitoring are available

System is put into operation

- The system performs a self-test to ensure that the sensors are working correctly.
- The operating personnel begin production as scheduled, without any delays
- The maintenance work is accepted by the operating personnel

+ Optimized production times

+ Verification that the sensors are working correctly

C

By using state-of-the-art sensor technology and integrating it into an automation network, it is possible to take advantage of innovative functions that have a direct impact on a system's or machine's productivity.

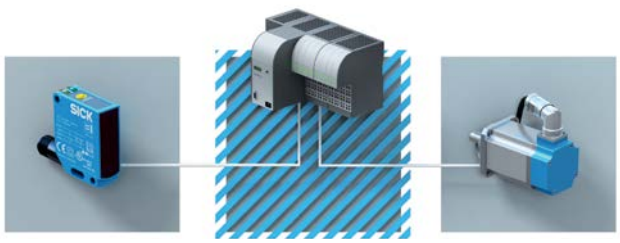

Boosting the productivity of systems and machines requires ever more powerful automation networks and control systems.

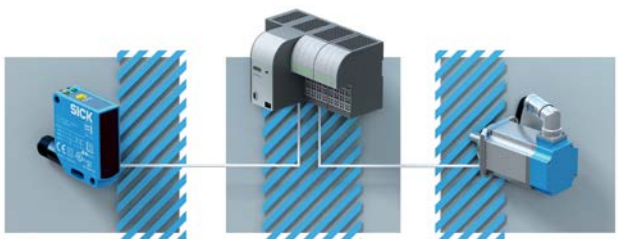

One option for improving the performance of automation networks is to place intelligent functions in remote locations. The various ways in which sensors and control systems can work together open up new possibilities for enhancing productivity.

C

Advanced functions

C

High-speed counters

Some systems and machines have to know how fast conveying equipment is moving in order to carry out control tasks, or they need to ensure that the speed of a roller stays within defined limits.
Embedding a counting function in the sensor makes it possible to carry out these automation tasks and others with maximum efficiency. The microcontroller of a sensor can use its maximum clock frequency to optimize the detection process. This makes high-speed counting in the sensor an alternative to the central counter module.

Fields of application:

- Systems and machines that require a mechanically rugged, yet inexpensive method of counting, value detection or speed measurement
- Systems and machines that would benefit from monitoring the direction of rotation in the sensor

W4S-3 . . . . . F-260
W4S-3 Glass F-272
W12-3 . . . . . G-528
W12G G-520

Speed monitor

- The sensor detects the teeth of a gearwheel and monitors the speed of the roller
- Any deviations that extend beyond the speed tolerances are communicated to the PLC

High-speed counting in the sensor provides an alternative to the central counter module

Cost reduction

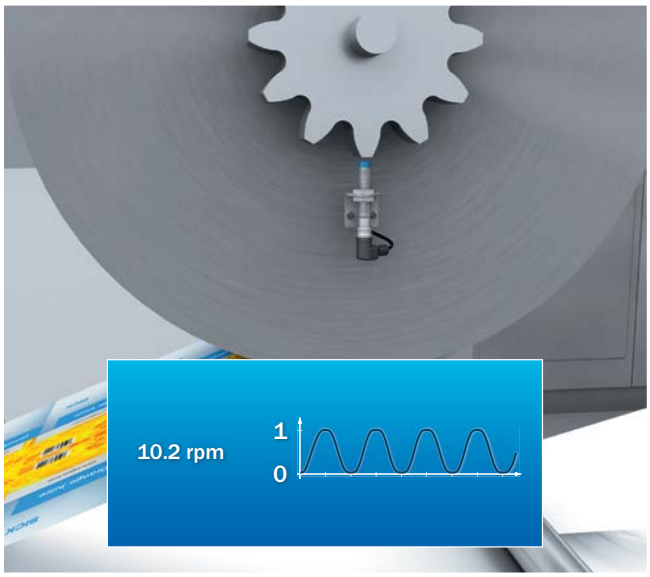

C

Speed measuring

- The optical sensor detects and counts the holes of a perforated disk
- Parameters specified by the control system are used to convert the counter value into a speed
- The speed per minute is transferred to the control system cyclically

Easy and precise speed measuring

Option of linking a sensor to an additional sensor in order to determine the direction of rotation. The sensor then sends information on the direction of rotation and speed cyclically to the PLC.

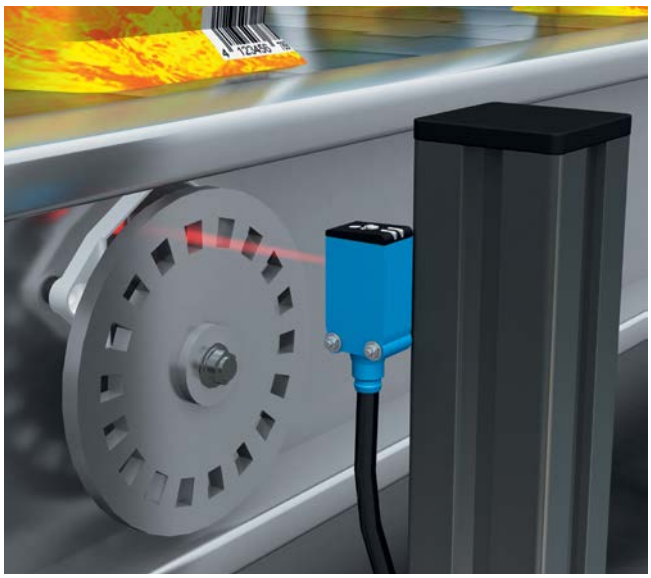

Precise detection and counting

- The optical sensor detects and processes a parameter-specific counting function
- The counting results are transferred to the control system cyclically
- The counting value is reset via the control system or an optional sensor input

Reliable detection and counting within the sensor instead of the PLC

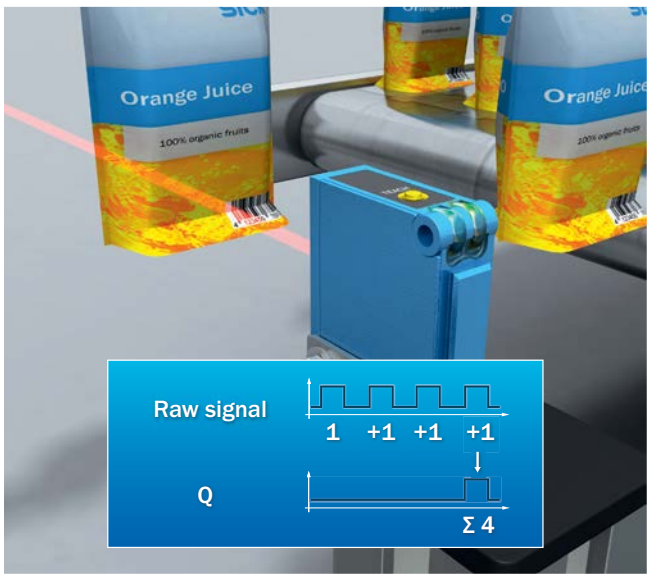

C

Timers

Sometimes it is necessary to check whether an object is in the correct position on the belt or whether it is too large or too small.
If the conveying equipment is moving at high speeds, however, conventional detection methods that use a sensor as well as time evaluation in the control system often cannot provide the level of accuracy required. These systems are often limited by the control system's computing capacity and the speed of the network. Innovative sensors, however, measure the time window directly and with high precision, as well as provide the control system with the measurement result in the required format so that this information can undergo further processing.

Fields of application:

- Systems and machines that require more precise time detection for object lengths; for example, as a means of enhancing production quality or increasing the number of cycles
- Systems and machines that involve precise product distance monitoring
- Systems and machines that involve slip monitoring

W4S-3 . . . . . F-260
W4S-3 Glass F-272
W12-3 . . . . . G-528
W12G G-520

Product length measurement

- Using a high-precision method, the sensor detects the product passing by on the conveyor
- The time between the rising and falling edges is determined using the maximum internal clock frequency
- The product length is calculated in the PLC based on the time value determined in the sensor and the belt speed
- If the belt speed is constant, the length can also be calculated in the sensor. The sensor receives the parameters it needs from the PLC.

Simple and extremely precise time measurement provides the basis for calculating length

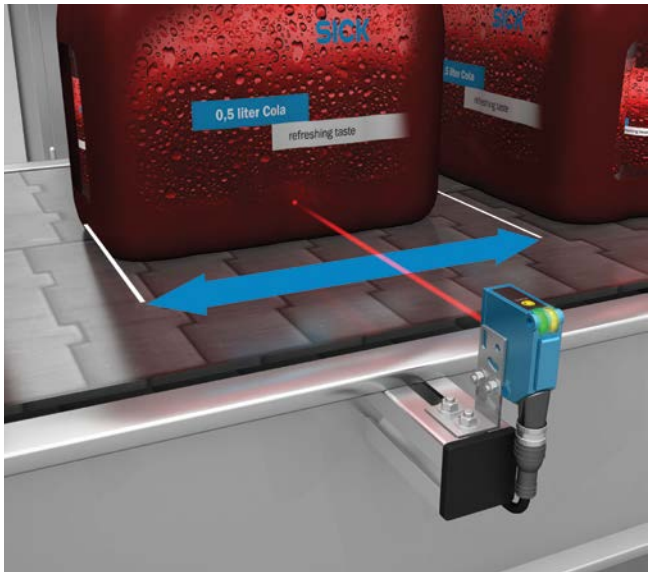

C

Distance measurement between two products

- Using a high-precision method, the sensor detects the gap between two products passing by on the conveyor
- The time between the falling and rising edges is determined using the maximum internal clock frequency
- The distance between the two products is calculated in the PLC based on the time value determined in the sensor and the belt speed
- If the belt speed is constant, the distance can also be calculated in the sensor. The sensor receives the parameters it needs from the PLC.

Simple and extremely precise time measurement provides the basis for calculating distance

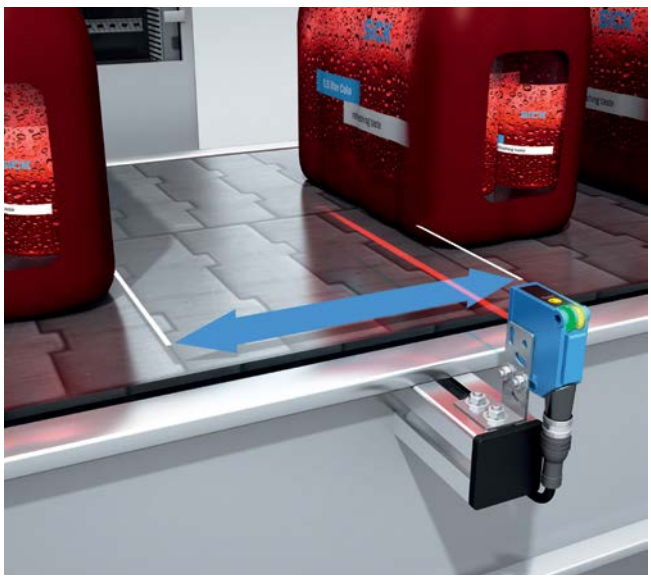

Speed measuring

- Linking a sensor to an additional sensor makes it possible to determine the speed of the product on the belt without a PLC
- The time between the rising edge for “sensor 1” and the rising edge for “sensor 2” is determined using the maximum internal clock frequency of the sensor and converted into a speed
- Since belt speed information is not required to calculate the speed, it does not matter if there is any slip between the belt and product
- The sensor cyclically sends product speed information to the PLC

Easy and precise speed measuring

Slip-free speed measuring

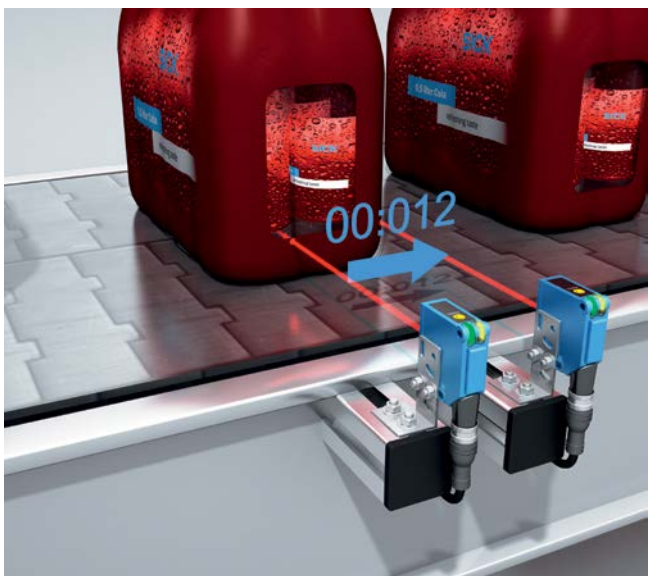

C

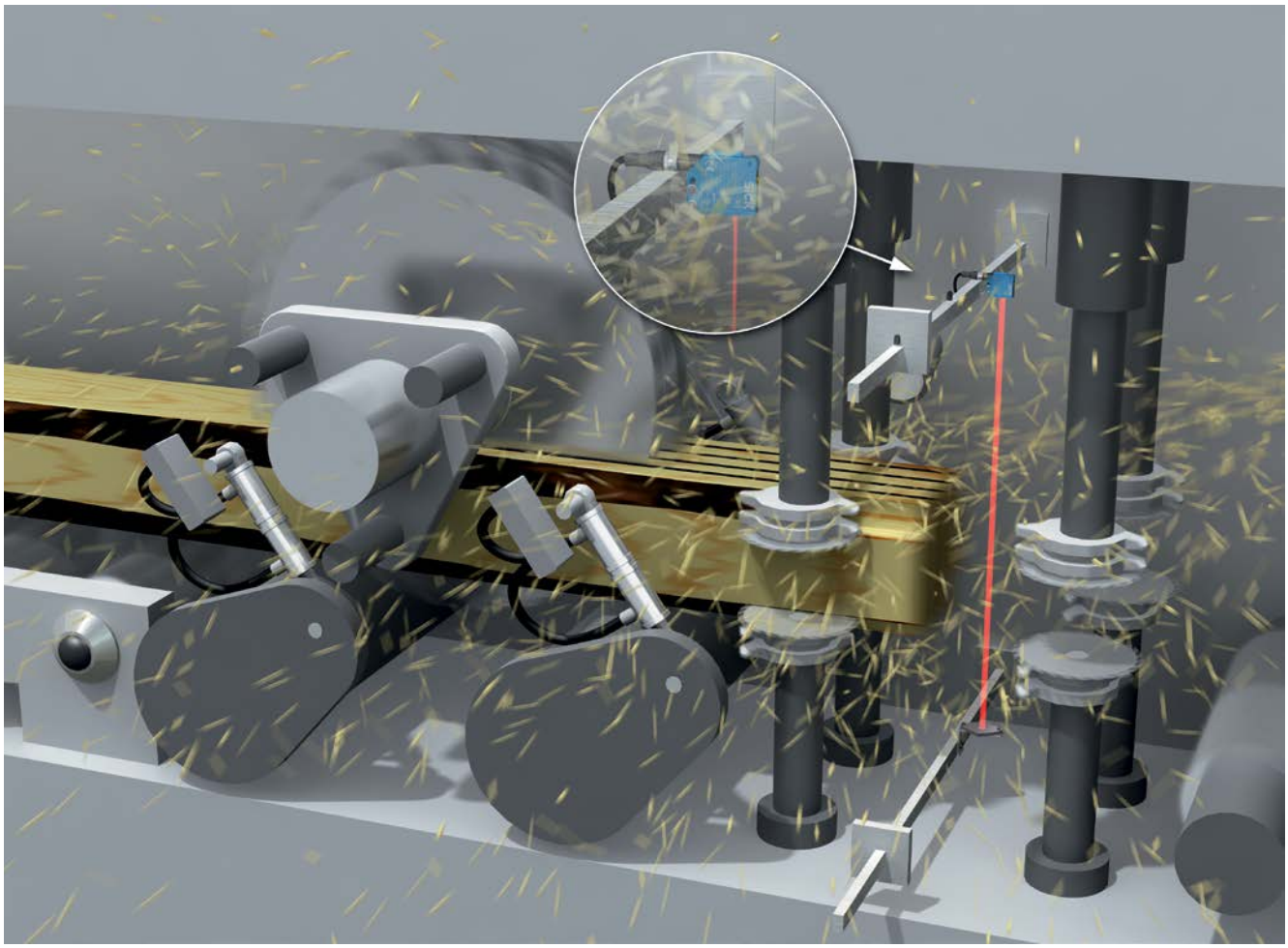

False Tripping Suppression (Debouncing)

In order to maintain productivity in some systems and machines, it is important for a sensor to be able to identify which detection signals are disturbances. It can then suppress such disturbances using additional detection information. In the wood processing industry, for example, it is possible for sensors to identify any signal change of less than 5 ms as irrelevant and reliably suppress it. This prevents the control system from being burdened with information that will disrupt the process. The automation system manages the disturbance suppression parameters in a way that is specific to the application concerned.

Fields of application:

- Systems and machines affected by large numbers of disturbance signals, resulting from either the process or the environment
- Systems and machines with lean control technology

W4S-3 . . . . . F-260
W4S-3 Glass F-272
W12-3 . . . . . G-528
W12G G-520

Application possibilities for decentralized debouncing

Undefined leading edges on objects

Unexpected gaps and holes in PCBs

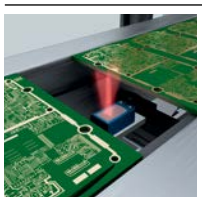

Chips, dust, dirt particles

False Tripping Suppression (Debouncing)

- Every object that enters a sensor's field of view causes the sensor signal to switch on (0/1 signal switch).
- As soon as the sensor can no longer see the object, it switches off (1/0 signal switch) Because of the time delay involved in switching the signal (debouncing), brief disturbance variables do not cause the sensor to switch. Signal switching will not take place if the delay time (debounce time) is longer than the disturbance variable. The debounce time can be configured for rising and falling edges.
- If a time stamp is also being used, the time delay can be corrected as the sensor internally "identifies" the time until each rising or falling edge

+ Reliable detection of objects in harsh environments

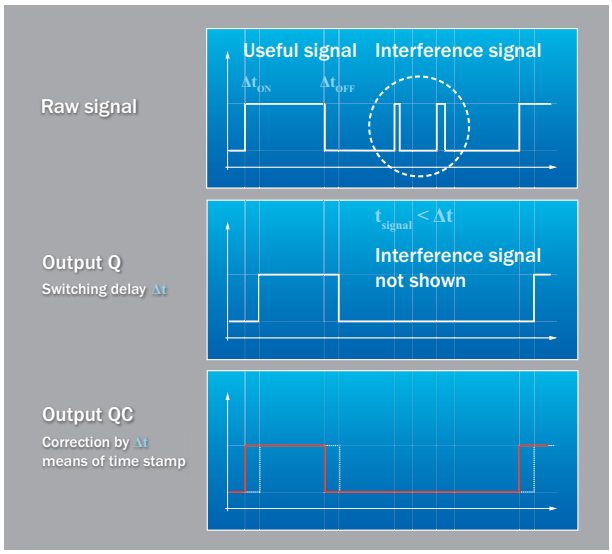

Debouncing in the sensor instead of the PLC

- Debouncing takes place where the signal is picked up
- Debounce times can be implemented independently of cycle times, bus runtimes, and input delays
- Debouncing uses the speed of the sensor's microcontroller (e.g., 5 kHz)
- Precise leading edge and/or trailing edge detection for objects, as disturbance variables bouncing off an object are detected in even the smallest of gaps and do not extend the switching signal
- The sensor is provided with a production-specific debounce value (e.g., 3 ms)
- The sensor debounces interference effects and detection errors, and sends a clean signal back to the PLC

+ Sensor debounces what it really "sees", not the switching signal

+ Increased machine speed

+ More precise detection

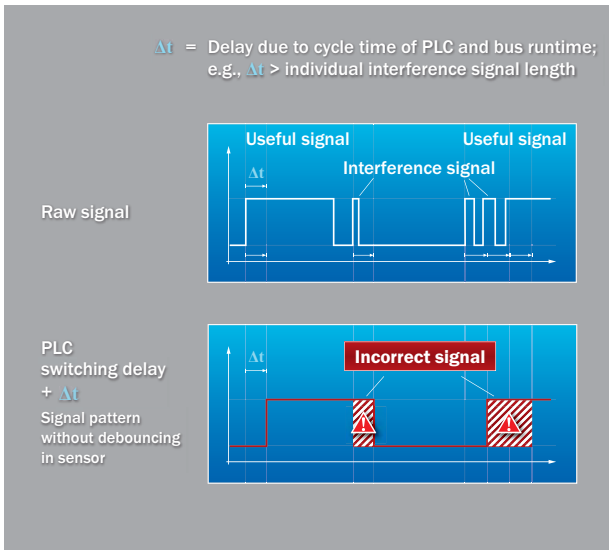

Linking sensors

- To improve reliability, a second signal can be read in on the sensor (IO-Link sensor) as an addition to debouncing
- The two raw signals are compared and only the signal that is cleaned by means of the logic is output to the PLC
- The two raw signals can be debounced independently of one another

+ Maximum signal quality combined with reliable detection in harsh environments

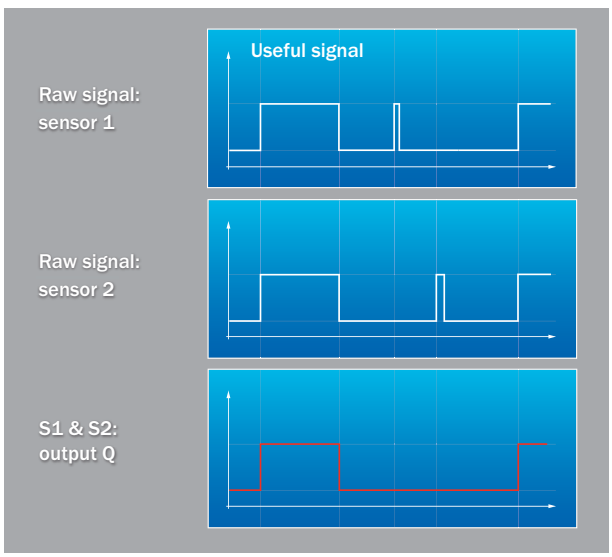

C

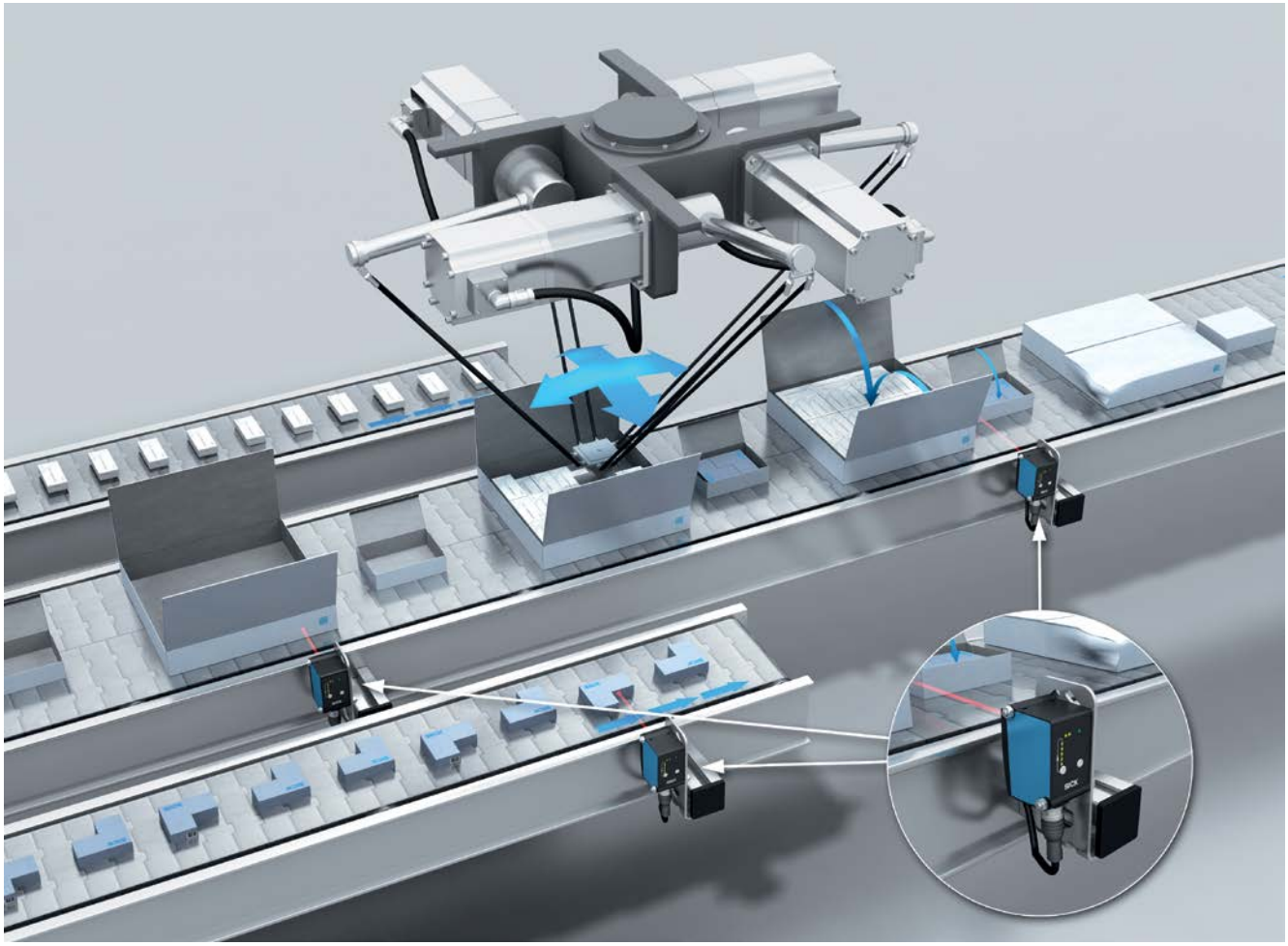

Profile recognition and verification

Sometimes it is necessary to check whether an object is in the correct position on the belt or whether it is the right shape. If the conveying equipment is moving at high speeds, however, conventional detection methods that use a distance sensor and contour analysis in the control system require complex technology for this type of application.
These systems are often limited by the control system's computing capacity and the speed of the network. Smart sensors, however, measure the actual profile directly and with high precision. They then evaluate the result by comparing the shape and measured values with a desired profile that has been configured or taught in. The control system simply receives a binary signal to enable further action to be taken.

Fields of application:

- Systems and machines that require profile recognition; for example, as a means of enhancing production quality or increasing the number of cycles
- Profile measurement for position detection in systems and machines
- Sorting by means of product features in systems and machines
- High-speed profile verification in systems and machines, without significant demands being placed on the PLC

C

Object position detection

- The sensor receives the corner points of the object's profile by means of a teach-in process
- The tolerances are defined using configuration settings (e.g., ± 5 mm)
- While the machine is operating, the sensor simply tells the control system whether the position of the object is right or wrong

Use of standard sensors in a way that provides an alternative to high-precision sensors (with analog output and an analog PLC input card)

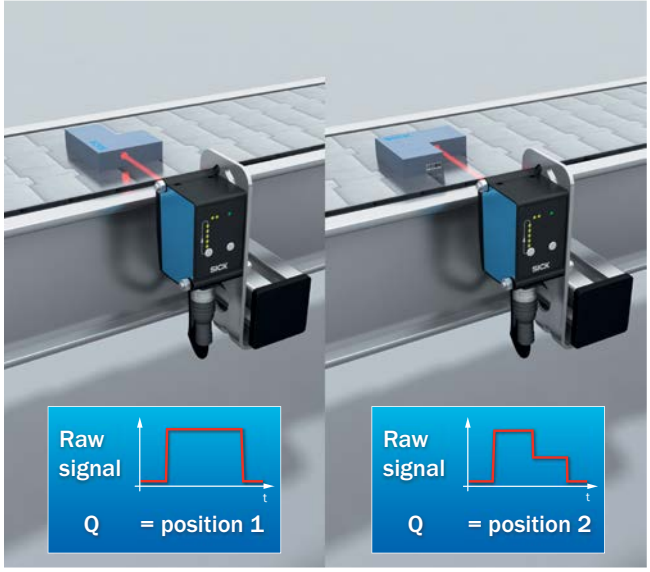

Differentiation between types of packaging

- The sensor receives multiple corner points of the profile for the types of packaging by means of a teach-in process or configuration settings
- The tolerances for the relevant profiles are defined using configuration settings
- While the machine is operating, the sensor tells the PLC which profile has been recognized

Increased machine flexibility

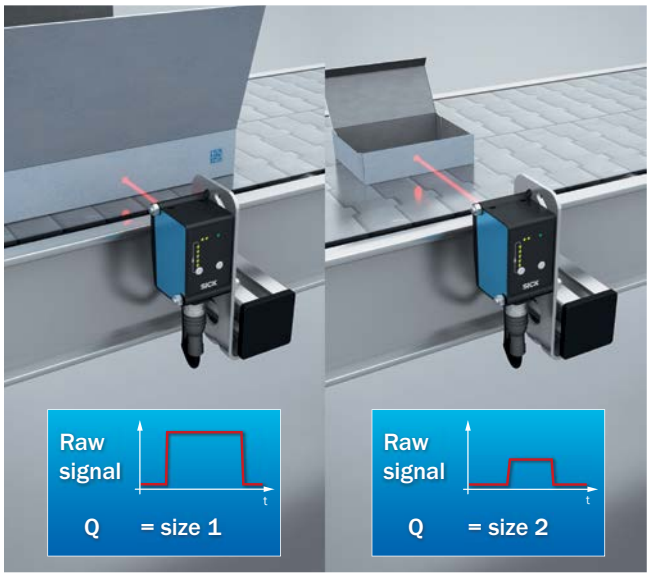

Detecting deviations in shapes and product errors

- Profile corner points on the packaging or box are entered using the PLC's configuration tool
- The tolerances are defined using configuration settings (e.g., ± 1 mm)
- While the machine is operating, the sensor simply detects the deviation in shape and reports the packaging error to the control system

Optimized allocation of PLC resources

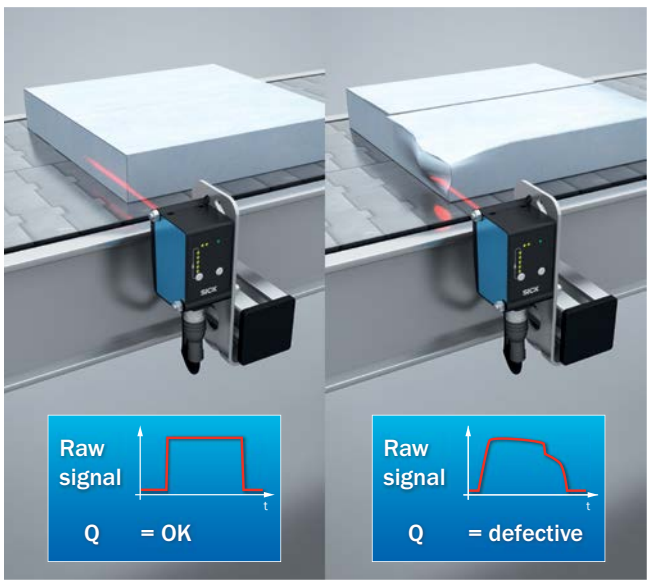

C

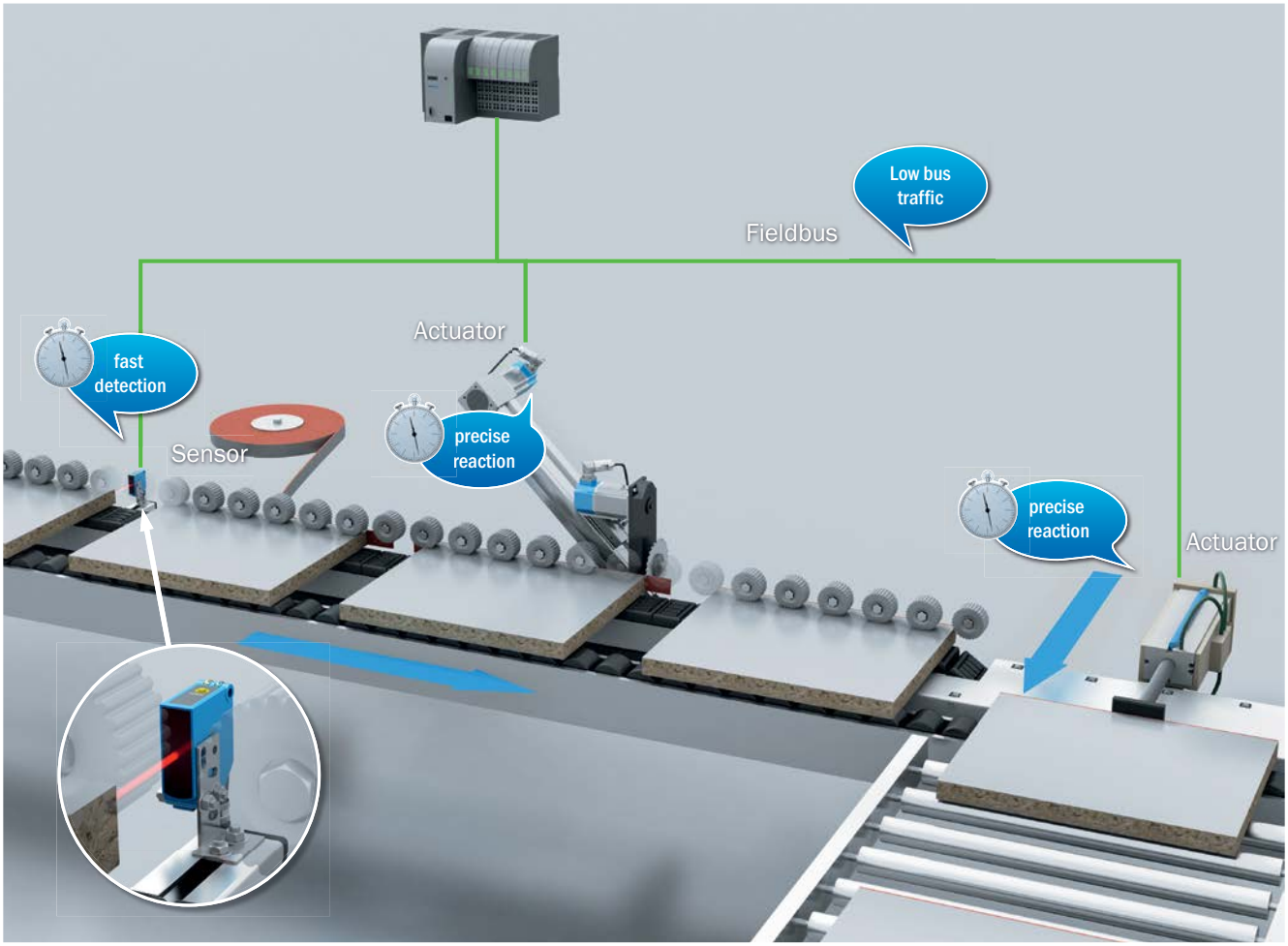

Product track and trace using timestamps

The fast, precise process of product detection during production can be linked to a time value. The result is a highly accurate method of specifying a position based on timestamping.
The time at which the product is detected is precisely synchronized with the automation system's real time. This synchronization typically takes place in the PLC. Areas of inaccuracy (jitter) that occur when the switching signal is being transmitted to the PLC (e.g., on the bus) and when a program is being executed are added together.
Synchronization with real time takes place in the sensor, not in the PLC.

Fields of application:

- Production lines with high productivity levels and high production speeds
- Precise production systems and machines
- Functional synchronization with sensor/actuator units

W4S-3 . . . . . F-260	W12-3 . . . . . G-528
W4S-3 Glass F-272	W12G G-520

8015327/2014-02-08
Subject to change without notice

Fast detection

- Every object that enters a sensor's field of view generates a rising/falling edge and timestamps that are set internally
- If the signal proves to be the result of correct detection (after debouncing, for example), then the relevant time stamp is transmitted to the control system for signal change purposes

Increase in machine speed thanks to more precise detection

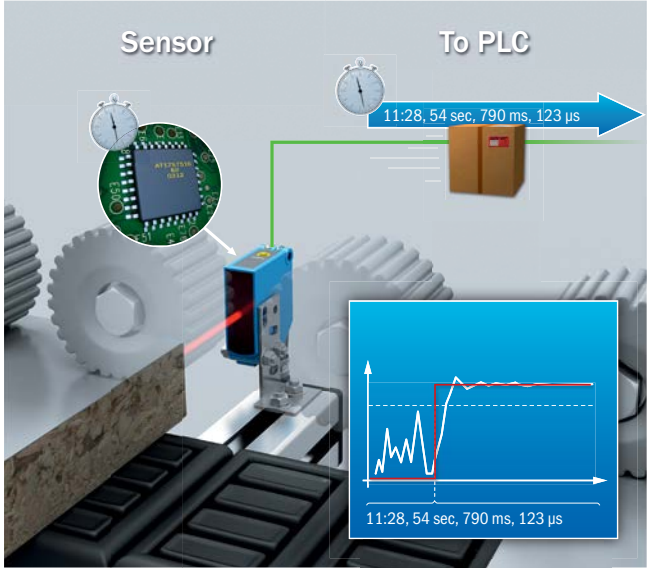

C

PLC calculations

- The PLC receives the sensor time stamp and calculates the actuator time stamp based on this information. The distance between the sensor and actuator corresponds to the difference between the sensor and actuator time. The PLC cycle time that is affected by jitter and the bus runtime are not taken into account when the actuator time stamp is calculated.

Optimized signal processing reduces strain on the network structure

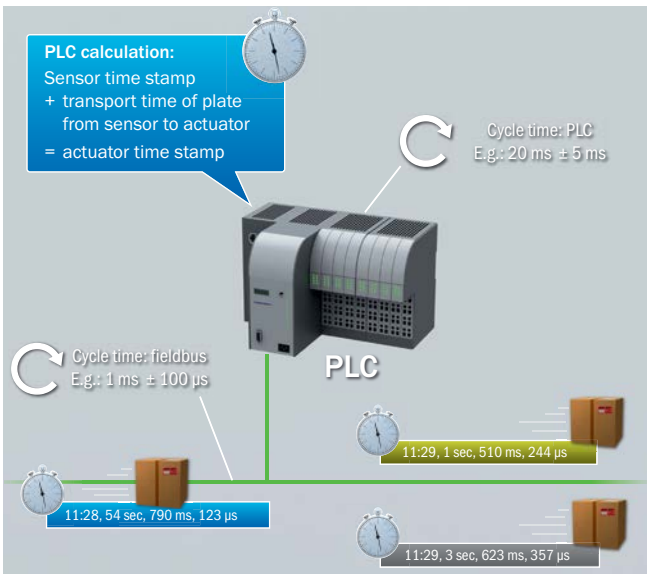

Precise reaction of actuators

- The actuator is informed early on about the time at which it has to execute a desired action. For this purpose, a rising edge for controlling a valve, for example, plus the associated timestamp are transmitted to the actuator. Another timestamp and the "falling edge" signal are used to reset the valve.
- In the case of a pneumatic cylinder, an analog positioning sensor (e.g., MPA) continually monitors the throughput time, for example. If the environmental conditions change and the throughput time slows down, the actuator can automatically correct the start time so that the action can be performed at the right point.

Functional synchronization with sensor/actuator units

Guaranteed machine performance

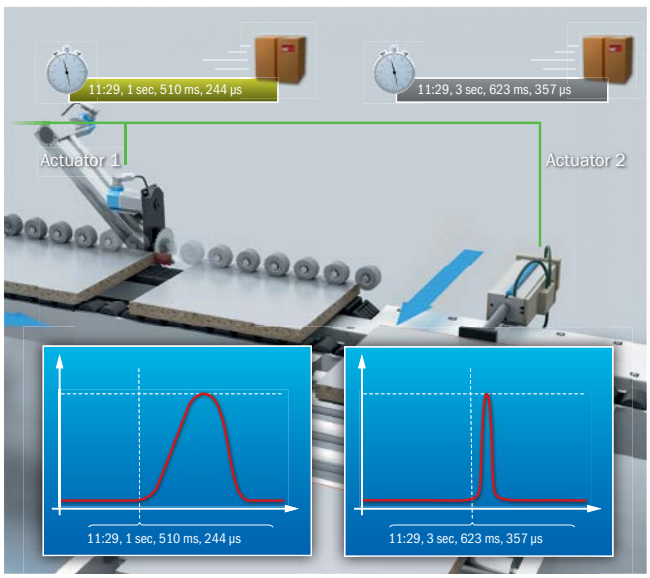

D

Typical applications

This chapter describes typical applications for photoelectric sensors. Arranged according to industry, you will find application examples with a brief description of the typical application as well as a direct product recommendation from our varied product portfolio.

8015327/2014-02-08
Subject to change without notice

D

Typical applications

D

Application overview

	MultiTask photoelectric sensors					Miniature photoelectric sensors							
	MultiLine Sensor	MultiPac	Reflex Array	TranspaTect	ZoneControl	G6	W2 Flat	W2S-2	W4-3	W4-3 Glass	W4S-3	W4S-3 Inox	W100 Laser
Automotive and parts supplier													
Presence and type checking for seat underframe parts													
Part detection		■											
Part detection in a crossbar robot													
Vehicle protrusion monitoring													
Collision prevention at robot grippers													
Quality check using photoelectric sensors		■											
Robot guidance for installation of windshields													
Skid detection at the lift station entry			■										
Type check for car body parts													
Monitoring the feeder clips			■										
Print													
Presence monitoring and counting process									■		■		
Sheet presence and position monitoring									■		■		
Detection of paper edges									■		■		
Paper tear monitor									■		■		
Electronics													
Detecting circuit boards	■												
Device detection in gripper								■					
Object detection and intelligent identification													
Wire bonder automation solutions								■					
Beverage													
Detection of single trays				■									
Detecting PET cases		■											
W4S-3 Inox in a bottling plant												■	
Wine bottling plant: WLL180T determines the filling level													
Wood													
Board detection (application 1)													
Board detection (application 2)													
End of material detection													
Accurate and reliable leading edge detection of profile wood and pallets			■										
Rubber and plastics													
Checking presence and fill level in the singulation system													
Checking the presence and position of trays													
Controlling the conveying line													
Detecting parts in the gripper and the injection molding tool							■						

	Small photoelectric sensors						Compact photoelectric sensors		Cylindrical photoelectric sensors				Fiber-optic sensors and fibers	Page
	W9-3	W9L-3	W12-2 Laser	W12-3	W14-2	W18-3	W27-3	W280L-2 Long Range	GR18S	V18V	V180-2	W15	WLL180T and LL3	
				■										D-86
														D-86
			■											D-86
							■							D-86
				■										D-87
														D-87
				■										D-87
														D-87
				■										D-88
														D-88
	■													D-89
	■			■		■								D-89
	■			■										D-89
	■			■										D-89
														D-90
														D-90
													■	D-90
													■	D-90
														D-91
														D-91
														D-91
													■	D-91
											■			D-92
								■						D-92
	■													D-92
														D-92
													■	D-93
				■										D-93
				■					■			■		D-93
													■	D-93

D

D

	MultiTask photoelectric sensors					Miniature photoelectric sensors							
	MultiLine Sensor	MultiPac	Reflex Array	TranspaTect	ZoneControl	G6	W2 Flat	W2S-2	W4-3	W4-3 Glass	W4S-3	W4S-3 Inox	W100 Laser
Courier, express, postal and cargo													
Level control for slides/chutes						■							
Speed measurement with laser sensors													■
Empty detection													
Leading edge detection			■										
Retail and warehousing													
Tilt-tray sorter off load detection													
Detection of inhomogeneous containers			■										
Pallet detection			■										
Accumulation conveyor/retrofits					■								
Food													
Detection of highly reflective coffee packages	■												
V18V on a conveyor belt													
WTB4-3 for securing apertures									■		■		
Tire													
Automatic wheel separating on conveyor belts					■								
Tire detection		■											
Loop control: loop measurement		■											
Tire separating					■								
Solar													
Detection in harsh environment												■	
Smart wafer presence detection								■					
Glass panel overhang detection									■	■			
Double wafer detection													
Traffic													
Detection of persons for automatic door opening													
Detection of the direction of travel						■							
Separation in security gates													
Machine tools													
Automated parts infeed and outfeed													
Component detection in a crossbar robot													
Tracking the sheet roll													
Detection of assigned tool locations													
End of material detection													
Stamp breakage monitoring		■											
Optical inline quality checking													
Positioning of the sheet pallet													

	Small photoelectric sensors						Compact photoelectric sensors		Cylindrical photoelectric sensors				Fiber-optic sensors and fibers	Page
	W9-3	W9L-3	W12-2 Laser	W12-3	W14-2	W18-3	W27-3	W280L-2 Long Range	GR18S	V18V	V180-2	W15	WLL180T and LL3	
														D-94
														D-94
					■									D-94
														D-94
				■										D-95
														D-95
														D-95
														D-95
														D-96
										■				D-96
														D-96
														D-97
														D-97
						■	■							D-97
							■							D-97
														D-98
														D-98
														D-98
													■	D-98
							■							D-99
									■					D-99
												■		D-99
				■										D-100
			■											D-100
							■							D-100
							■							D-100
											■			D-101
		■												D-101
			■											D-101
				■										D-101

D

Presence and type checking for seat underframe parts

Besides the presence of parts, additional features such as holes, boreholes and cutouts must be detected at the turntable for type testing. The WTB12-3 small photoelectric sensor is used for quality assurance and type testing. The pin-point technology produces a highly visible light spot, which simplifies alignment and enables precise detection.

Recommended products

W12-3 . . . . . G-528

D

Part detection

Two redundant receiver arrays are used to check that the side panels are present. The MultiPac compact photoelectric sensor has been developed specially to detect complex objects such as bright metal parts. The powerful LED produces a highly visible light spot and makes for easy alignment.

Recommended products

MultiPac E-130

Part detection in a crossbar robot

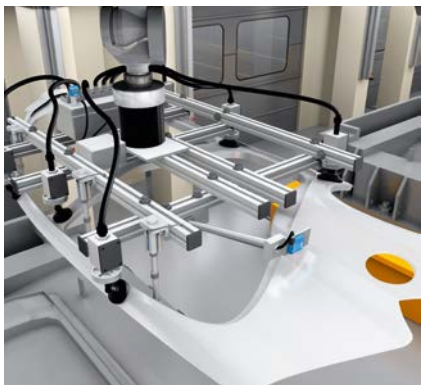

The WT12L-2 small photoelectric sensor checks whether the part is located in the gripper of the robot and whether the part has been removed from the press tool. This prevents mechanical damage to the press.

Recommended products

W12-2 Laser G-510

Vehicle protrusion monitoring

When lifting the vehicle, it is essential to rule out contact that could cause damage to the body. The WTB27-3 compact photoelectric sensor detects the position of the skid and recognizes any protrusion of the vehicle.

Recommended products

W27-3 . . . . . H-616

Collision prevention at robot grippers

The WTB12 small photoelectric sensor checks whether the seat is at the correct position so that the robot can grip it accurately. This prevents any collision between the robot and the seat.

Recommended products

W12-3 . . . . . G-528

Quality check using photoelectric sensors

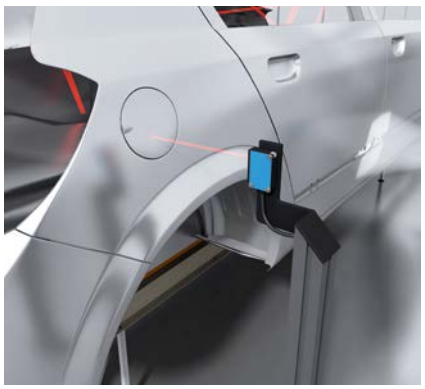

The MultiPac MultiTask photoelectric sensors were developed specially for use with a reflective, bright surfaces. Two independent receiver arrays provide redundant detection, which enables even the most complex applications to be solved reliably and ensures high system availability.

Recommended products

MultiPac E-130

Robot guidance for installation of windshields

The robot takes the windshield from the turntable. Four W12-3 small photoelectric sensors ensure that the gripper is positioned precisely and that the windshield is picked up without tension. The robot then travels to the approximate position over the windshield cutout in the body. It moves its gripper over the installation point until the OD short range distance sensors (displacement) register the exact distance. The windshield is then inserted precisely.

Recommended products

W12-3 . . . . . G-528

Skid detection at the lift station entry

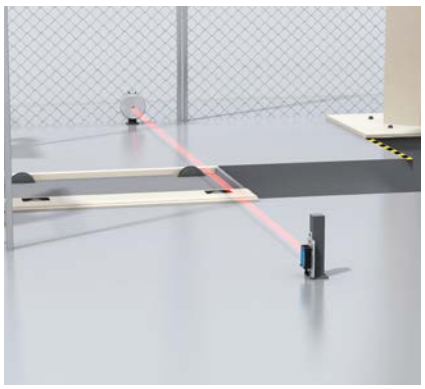

The skid with the body is detected prior to entering the lift using the Reflex Array MultiTask photoelectric sensor. The photoelectric sensor produces a line, which is used to detect the different skids. As a result, the position tolerances are compensated by up and down movement of the skid on the roller conveyor.

Recommended products

Reflex Array E-134

Type check for car body parts

Besides the presence of parts, additional features such as holes, boreholes or cutouts must be detected for type testing. The Inspector vision sensor detects several parts simultaneously. Several features can be taught and a variety of testing tasks defined. W12-3 small photoelectric sensors with pin-point technology use a small light spot to detect even the smallest gaps without the limiting laser class. When all parts are inserted correctly and completely, the turntable is enabled for further processing.

Recommended products

W12-3 . . . . . G-528

D

Monitoring the feeder clips

Fast and reliable monitoring of closed feeder clips at feeders is possible with only one Reflex Array MultiTask photoelectric sensor. The 50-mm line detects any deviation from the correct position, thus preventing damage to the placement head and enhancing machine availability.

Recommended products

Reflex Array E-134

Presence monitoring and counting process

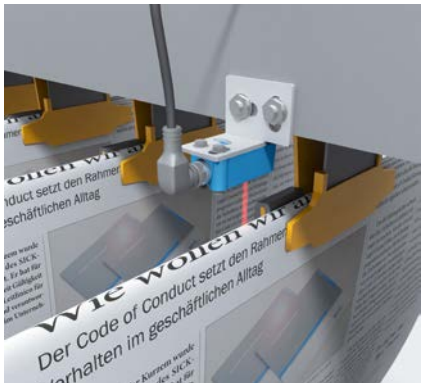

WTB4-3 and WTB9-3 miniature and small photoelectric sensors detect the „shoulders“ of the copies and check that they are present. Noncontact and wear-free copy counting takes place at the same time.

Recommended products

W4-3 . . . . . F-238
W4S-3 . . . . . F-260
W9-3 . . . . . G-448

Sheet presence and position monitoring

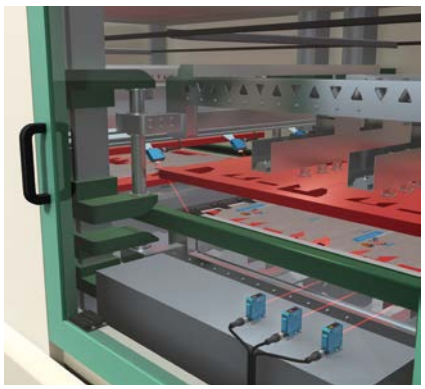

WTB4-3, WTB9-3, WTB12-3 or WT18-3 miniature or small photoelectric sensors reliably detect the presence of a print sheet or paper sheet regardless of their colors. They forward this information to the controller of the printing machine in the form of a control signal. This allows detection of a non-synchronous paper feed and monitors the correct paper flow.

Recommended products

W4-3 . . . . . F-238
W4S-3 . . . . . F-260
W9-3 . . . . . G-448
W12-3 . . . . . G-528
W18-3 . . . . . G-556

Detection of paper edges

WTB4-3, WTB9-3 or WTB12-3 fast miniature and small photoelectric sensors use a precise light spot to detect the positions of the paper front and back edges, regardless of the color of the paper. This determines the length of the paper sheet precisely and eliminates any background disturbances.

Recommended products

W4-3 . . . . . F-238
W4S-3 . . . . . F-260
W9-3 . . . . . G-448
W12-3 . . . . . G-528

Paper tear monitor

The WTB4-3, WTB9-3 or WTB12-3 miniature and small photoelectric sensors detect paper tears fast and reliably. Equally important is the absolutely reliable detection of the paper web, even with varying surface reflections. This prevents unnecessary machine downtime. Background suppression ensures that the rear web has no impact on the paper tear check of the front web.

Recommended products

W4-3 . . . . . F-238
W4S-3 . . . . . F-260
W9-3 . . . . . G-448
W12-3 . . . . . G-528

Detecting circuit boards

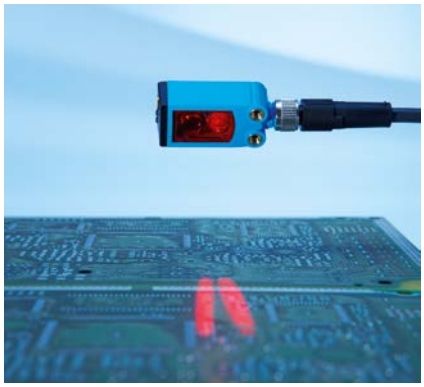

Circuit boards must be reliably detected at many different points along a production line. Standard photoelectric proximity sensors that rely on a punctiform light spot do not always detect circuit boards reliably because any openings in the circuit board will result in signal interruptions. With its two line-shaped light spots, the MultiLine sensor compensates for the openings or other factors (reflective surface). As a result, the circuit boards are detected reliably without any signal interruptions.

Recommended products

MultiLine Sensor E-124

Device detection in gripper

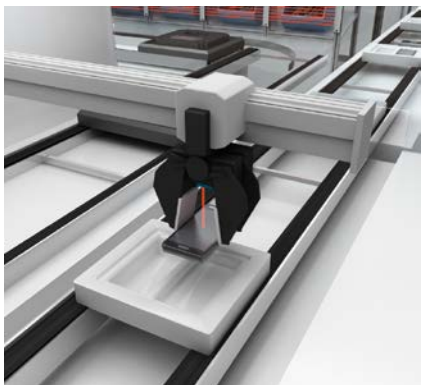

Grippers often make large movements to grab their objects. The ideal sensors to mount on the gripper must be small and light-weight. The sub-miniature (7.7 x 21.8 x 13.5 mm) WT2S-2 photoelectric proximity sensor is the answer.

Recommended products

W2S-2 . . . . . F-216

Object detection and intelligent identification

An elegant solution comprised of the WLL180T-2 fiber-optic sensor with the LL3-TS40 fiber-optic cable creates the light array which provides real-time position data. The DFS60 incremental encoder reports the belt position. At the same time, the CLV620, featuring SMART620 code reconstruction, reads even damaged bar codes on the PCB, with the highest read rates in its class. It comes complete with Serial, Ethernet TCP/IP, and CAN network support. An optional expansion interface is available for OEMs requiring custom solutions.

Recommended products

WLL180T and LL3 . . . . . J-798

Wire bonder automation solutions

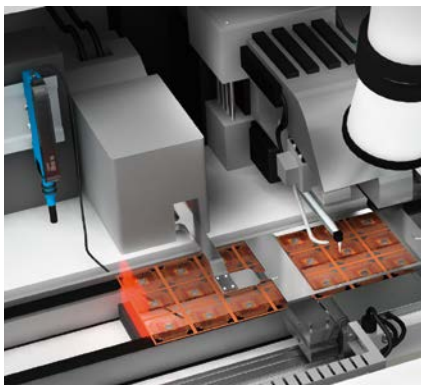

Here, the fiber-optic solution works best. The area near the bonding head is hot. The WLL180 fiber-optic sensor with a 16-µs response time together with the precise light array of the LL3-DH fiber cable provide a precise edge detection signal to the controller. The grippers must move fragile substrates at very high speeds with high precision to minimize bonding head idle time. The dual TTK70 linear encoder read heads operate at speeds up to 10 m/s with µm accuracy, contributing substantially to machine throughput. The W2S photoelectric proximity sensor with diffused light spot ensures the absence of substrate before allowing the cassette to move to the next slot.

Recommended products

WLL180T and LL3. . . . . J-798 W2S-2 . . . . . F-216

Detection of single trays

The new MultiTask sensor TranspaTect needs no reflector to detect transparent object – it uses the machine background as a reference surface instead. This results in a new freedom in machine design. At the same time AutoAdapt function ensures a smooth production process.

Recommended products

TranspaTect E-142

Detecting PET cases

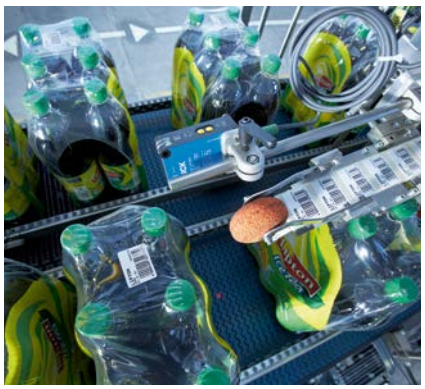

The transport of the cases is monitored and controlled with photoelectric sensor. Therefore the transport speed is increased or decreased – depending on the accumulated packages on the conveyor line. When a case is not detected, the controller receives no signal, and the speed of the conveyor belt is maintained or increased. Are still cases present, damage to the container and eventually stops can be the result. The MultiTask sensor MultiPac with its redundant detection system detects the different cases without signal interruptions.

Recommended products

MultiPac E-130

W4S-3 Inox in a bottling plant

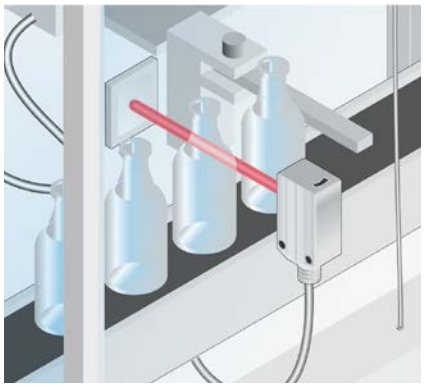

Recognition of PET and glass bottles under very harsh ambient conditions. The all around solution – reliable recognition of all packaging in the food and beverages market. Simple setting via Metal Membrane Teach. High reliability due to automatically tracking switching threshold.

Recommended products

W4S-3 Inox F-298

Wine bottling plant: WLL180T determines the filling level

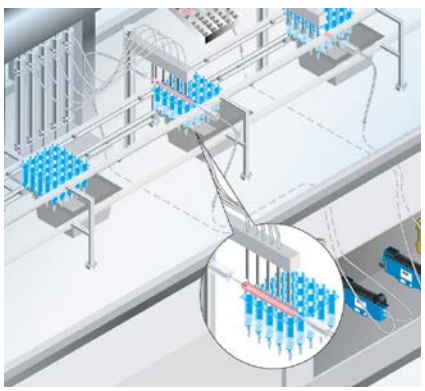

The filling tube, which is fitted with a filling level fiber-optic cable, is inserted down into the bottle neck, and filling begins. Once the desired level has been reached, the WLL180T switches and the filling process stops immediately.

Recommended products

WLL180T and LL3 . . . . . J-798

D

Board detection

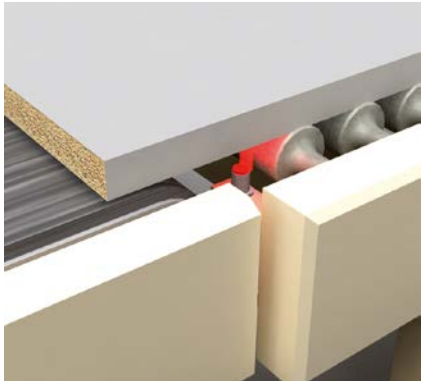

VTB180-2 photoelectric proximity sensors can be used for versatile detection tasks in automation technology. The small transition zone from the sensing distance to the background allows objects to be precisely detected. Interferences outside of the working area will be reliably ignored.

Recommended products

V180-2 . . . . . I-742

D

Board detection

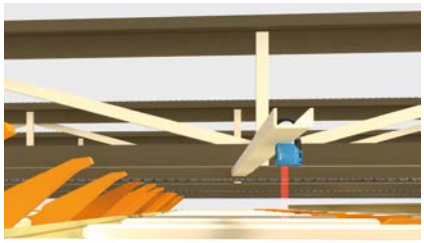

The compact photoelectric sensor W280L-2 Long Range recognizes boards thanks to the extremely high sensing range of up to 4 m without a reflector from a distance. In addition, a protection system prevents the W280L-2 Long Range impairments caused by reflections from the background, such as by shiny metal surfaces, windows or safety vests and allows the opposing mounting of the sensors without any interference.

Recommended products

W280L-2 Long Range H-666

End of material detection

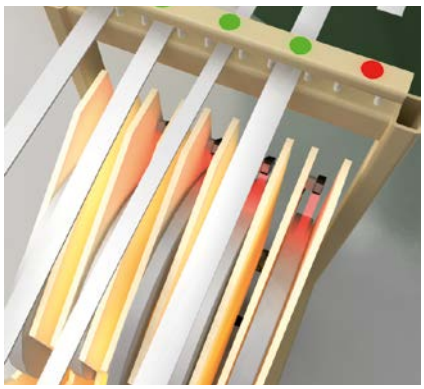

The end of the material is reliably detected with the compact and versatile W9-3 photoelectric proximity sensors. The sensing distance ranges from 30 to 250 mm. Precise background suppression makes the WTB9-3 immune to ambient light sources and is easy to adjust.

Recommended products

W9-3 . . . . . .G-448

Accurate and reliable leading edge detection of profile wood and pallets

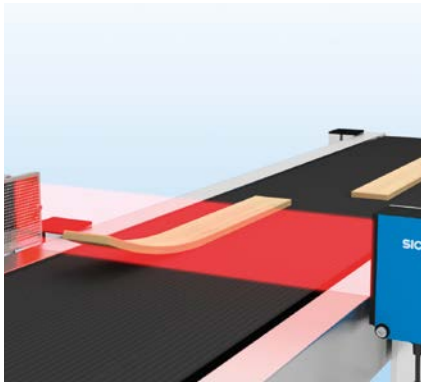

Due to the high conveying speed and the length of the profile wood, the wood does often not lie evenly on the conveyor belt. Thanks to its broad light band the Multi-Task sensor Reflex Array reliably detects profile wood and pallets – regardless of their position.

Recommended products

Reflex Array. E-134

Checking presence and fill level in the singulation system

To ensure that the vibration drives of a bowl feeder and the linear conveyors connected to it are not continually in operation, the presence of the material to be conveyed must be checked at various points in the singulation system. To ensure this occurs, all the material placed on the linear conveyor is detected using the rugged and easily adjustable WFL fork sensor. The WLL180 fiber-optic sensor is even able to monitor the presence of parts on the loading pallet when the space available is severely limited. The UP56 ultrasonic level sensor is used to check how full the bowl feeder is.

Recommended products

WLL180T and LL3 . . . . . J-798

Checking the presence and position of trays

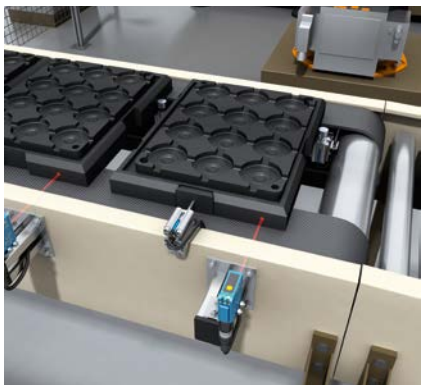

To control the conveying line, it is necessary to check whether the trays to be transported are present and whether they are in the correct position. The WTB12-3 small photoelectric sensor is used for this purpose. In addition to detecting the trays, this photoelectric sensor can also detect the position of the trays using the background suppression function.

Recommended products

W12-3 . . . . . G-528

Controlling the conveying line

The WL15 small photoelectric sensor reliably detects the presence of the foamed block in order to control the downstream conveying line. The WL15 or GL18S are designed for highly flexible mounting using M18 front mounting plastic nuts and a snap ring or side attachment. When it comes to mounting on an aluminum profile, the WL12-3 small photoelectric sensor is the perfect choice.

Recommended products

W12-3 . . . . . G-528
W15 . . . . . I-766
GR18S I-698

Detecting parts in the gripper and the injection molding tool

There is very limited room available for sensors in the robot gripper and the injection molding tool. For this reason, the W2 Flat miniature photoelectric sensor is the ideal choice for detecting inserts and finished parts so that they can then be placed in the gripper. The WLL180T fiber-optic sensor, featuring high temperature-resistant LL3-DH03 fibers, is perfect for use in injection molding tools.

Recommended products

W2 Flat. F-208
WLL180T and LL3. . . . . J-798

Level control for slides/chutes

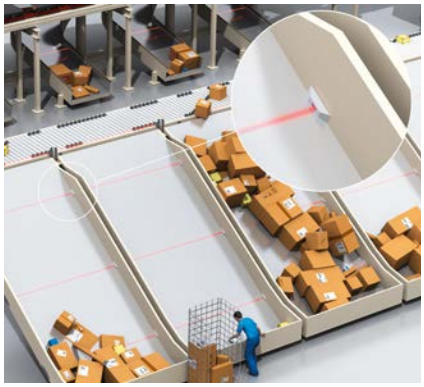

Cost-effective photoelectric red light sensors are used to monitor the filling level of slides. While the PLC knows the exact volume of the individual parcels in a slide, it has no information on the actual space still available in the slide since the parcels occupy it in an irregular way. Several sensors installed along the edge of the slide provide the PLC with the pre-alarm and alarm signals required to manage and prioritize the subsequent loading activities. PinPoint LEDs generate an extremely bright, precise light spot.

Recommended products

G6 . . . . . F-196

D

Speed measurement with laser sensors

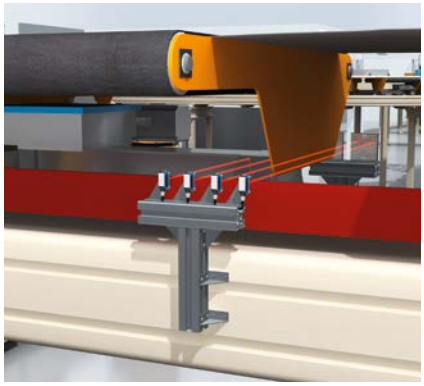

Laser sensors are used to measure speed on sorters without rotating axes. Robust, high-performance photoelectric laser sensors create light barriers and detect a part of a cross belt or tilt-tray belt as it passes through the laser beam to provide the controller with a reliable signal.

Recommended products

W100 Laser F-412

Empty detection

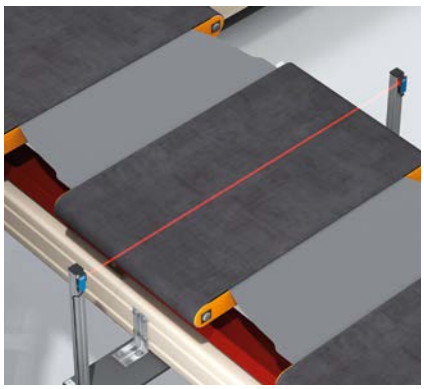

Empty detection is essential in avoiding double occupation of cells. If undetected, this condition inevitably results in incorrect deliveries and additional costs. A cost-effective W14-2 photoelectric sensor is used to check whether the cell is empty.

Recommended products

W14-2 . . . . . G-544

Leading edge detection

Leading edge detection with MultiTask photoelectric sensors is required to merge items, to detect the handover status to or off the sorter cells, or for other types of simple belt control tasks. MultiTask photoelectric sensors detect the leading edge of an item. The speed of individual belt segments is then controlled to create the gaps between the items. The Reflex Array multi-task photoelectric sensor with its light band is then used when objects with no clearly defined leading edge have to be detected reliably.

Recommended products

Reflex Array E-134

Tilt-tray sorter off load detection

On automatic tilt-tray sorting systems, WL12-3 sensors are mounted at the divert lane entry point to verify the lane and count items that are diverted through it.

Recommended products

W12-3 . . . . . G-528

Detection of inhomogeneous containers

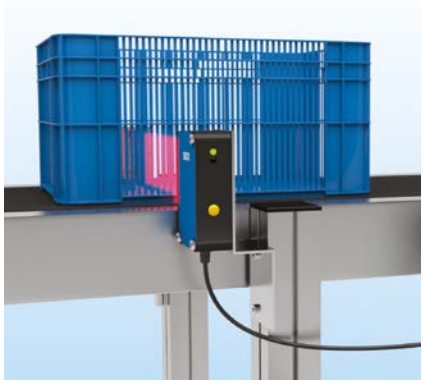

Inhomogeneous containers such as lattice boxes must also be detected reliably – there should be no multiple switchings. The 50-mm light band of the MultiTask photoelectric sensor Reflex Array allows precise leading edge detection even of inhomogeneous objects.

Recommended products

Reflex Array E-134

Pallet detection

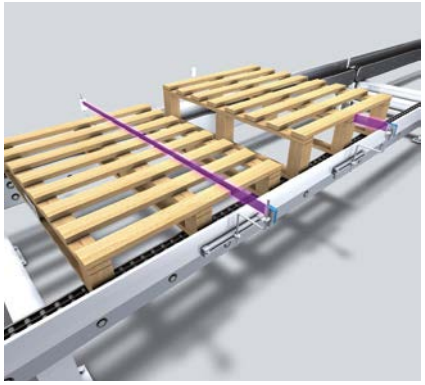

Reliable pallet detection is ensured with the MultiTask photoelectric sensor Reflex Array. Its 50 mm light band can compensate for different pallet heights.

Recommended products

Reflex Array E-134

Accumulation conveyor/retrofits

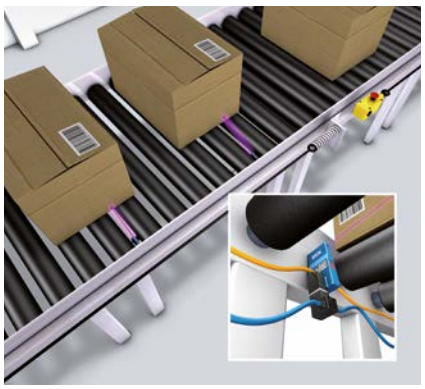

Parcels are more efficiently accumulated along conveyor lines to reduce backpressure, jams and product damage using ZoneControl sensors and logic modules. The sensors are mounted between the rollers of multiple conveyor zones where they are protected from damage.

Recommended products

ZoneControl E-148

D

Detection of highly reflective coffee packages

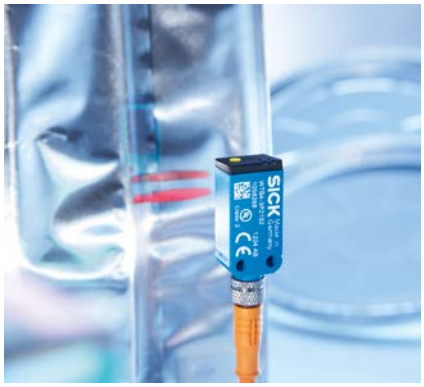

In the production line, the reflecting coffee packages have to be detected reliably in different positions. The multi-line sensor reliably detects the leading edge of the coffee packaging without signal interruption.

Recommended products

MultiLine Sensor E-124

D

V18V on a conveyor belt

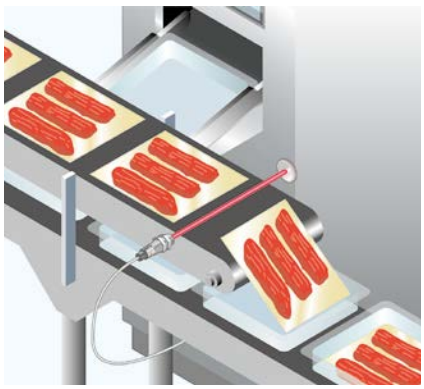

The VL18V retro-reflective photoelectric sensor for clear material detection triggers the portioning belt for synchronizing the feed belt (packaging/transparent belts).

Recommended products

V18V I-732

WTB4-3 for securing apertures

Task: to ensure that the aperture is sealed by the boxes. Solution: A WTB4-3 sensor with self monitoring function. If the aperture is not sealed or if there is a sensor error, a message is sent to the control sytem.

Recommended products

W4-3 . . . . . F-238

W4S-3 . . . . . F-260

Automatic wheel separating on conveyor belts

The ZoneControl sensor controls the wheel feed to the assembly station. The sensor is designed for so-called „Accumulating roller conveyors“. It is equipped with solenoids. The conveyor is divided into segments with a ZoneControl sensor with adjacent reflectors at the end of each section. The internal logic of the sensors ensures a controlled material flow to start or stop wheel feeding to the defined segments.

Recommended products

ZoneControl E-148

Tire detection

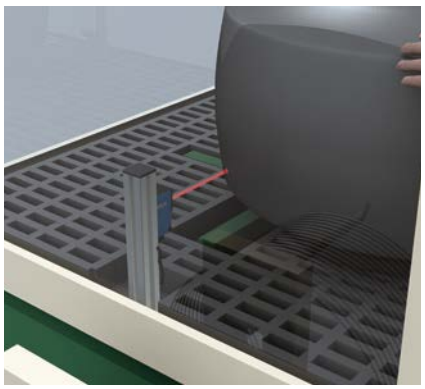

The tires must be detected at the hand-over point in order to be handled by the linear robot. This is done using a Multitask photoelectric sensor MultiPac. It detects the tires reliably.

Recommended products

MultiPac E-130

Loop control: loop measurement

Loop measurement enables decoupling of processes such as calendering and material infeed and out-feed when replacing the bobbin. Retro-reflective sensors (e.g., WL12, WL18 or WL27) installed on the top or bottom enable loop measurement.

Recommended products

W12-3 . . . . . .G-528
W18-3 . . . . . .G-556
W27-3 . . . . . .H-616

Tire separating

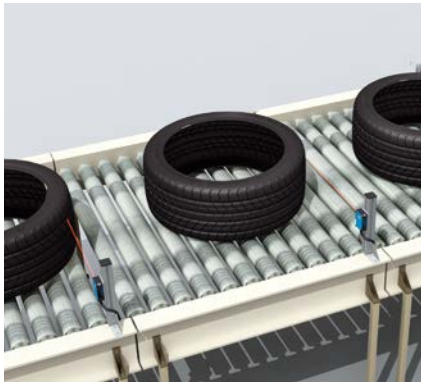

MultiTask photoelectric sensors MultiPac detect tires in the individual sections of the roller conveyor. The switching signal serves to control the roller conveyor. This ensures that the tires are separated and forwarded at identical intervals.

Recommended products

MultiPac E-130
ZoneControl E-148

D

Detection in harsh environment

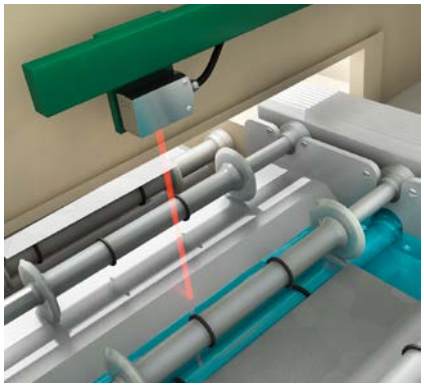

After wire sawing, the wafers are covered with abrasive coolant that will damage any unprotected device, and can obscure sensor windows. The WTB4S-3V photoelectric sensor is imperious to contamination. With the optional IO-Link interface, sensor window contamination can be continuously monitored, reducing machine downtime.

Recommended products

W4S-3 Inox F-298

D

Smart wafer presence detection

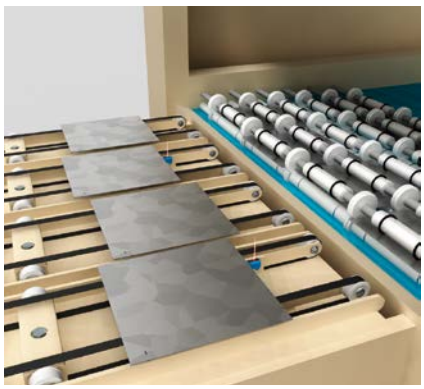

Sometimes the machine operator needs an unobstructed view. The ideal location for presence sensors in this instance is beneath the wafers, looking up into ambient light. Thanks to SICK's unmatched background suppression algorithms, both the operator and the W2S-2 photoelectric sensor can work without interference.

Recommended products

W2S-2 . . . . . F-216

Glass panel overhang detection

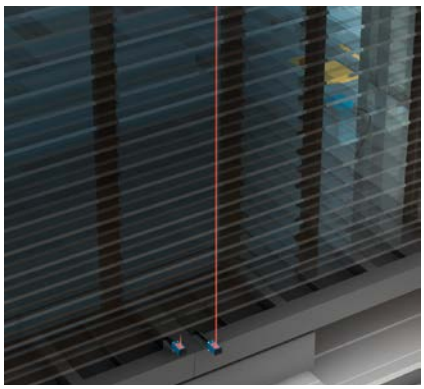

The WTV4-3 photoelectric proximity sensor monitors the often difficult to detect glass as the buffer loads/unloads. After the process, the glass may not reload into the magazine correctly, breaking the glass in transport. A WLG4 photoelectric retro-reflective sensor guards against overhanging panels.

Recommended products

W4-3 . . . . . .F-238 W4-3 Glass F-254

Double wafer detection

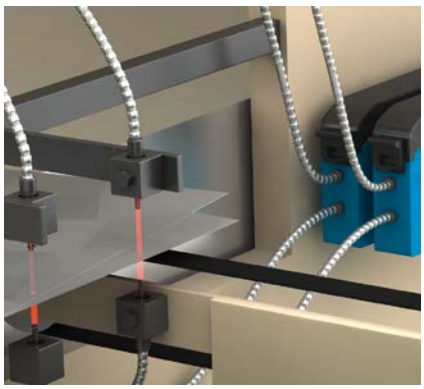

Wafers are light and thin, and stick easily, especially during the cleaning process. Stuck wafers must be detected quickly, as they will likely break and damage others. SICK's WLL180T fiber-optic sensor coupled with wide bandwidth fibers LL3-TW01, use a 1450 nm infrared beam to penetrate the wafer, instantly detecting stacked wafers.

Recommended products

WLL180T and LL3 . . . . . J-798

Detection of persons for automatic door opening

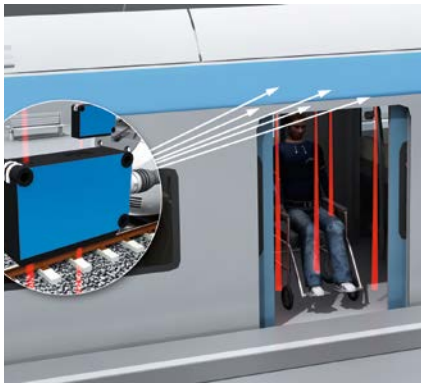

The position of pushbuttons for doors in public transportation vehicles are often not designed for the needs of wheelchair users. To accommodate individuals in wheelchairs, the WTB27-3 compact photoelectric sensor is mounted above the door to accurately detect when a wheelchair user approaches the door. The sensing range can be adjusted to reliably detect objects close to the ground (e.g., footrest). The door then opens on time and the wheelchair user can pass unhindered.

Recommended products

W27-3 . . . . . H-616

Detection of the direction of travel

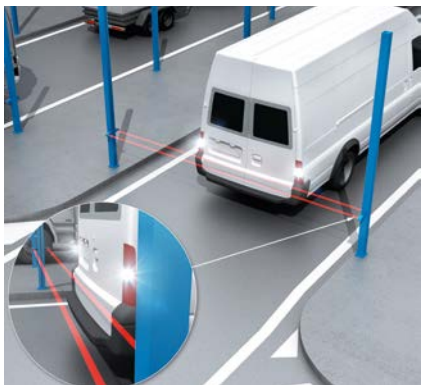

Toll stations must be able to reliably detect when a vehicle reverses out of the single lane. Acquiring this data ensures the proper toll amount has been paid. Two series-mounted GSE6 photoelectric sensors with a switching frequency of 1 kHz and an infrared light identify the contours of the vehicle very quickly. Even the travel direction of vehicles moving at high speeds is reliably measured.

Recommended products

G6 . . . . . F-196

GR18S. I-698

Separation in security gates

At public transportation stations, automatic access systems ensure that only people with valid tickets are transported. Multiple WL15 cylindrical photoelectric sensors are mounted on an access system. Combined with a downstream controller, the system ensures that only one person passes the turnstile per opening process. The WL15 uses the reflection principle and therefore, only has to be wired on one side of the turnstile, which saves time and money.

Recommended products

W15. . . . . I-766

D

Automated parts infeed and outfeed

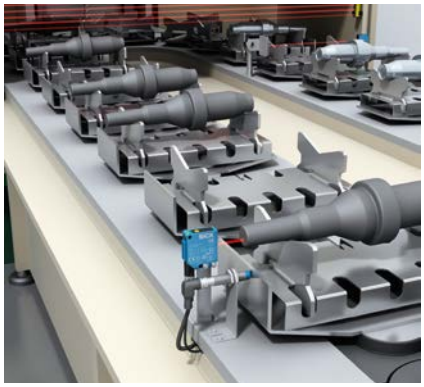

The conveyor feeds in new workpieces and discharges machined ones simultaneously. The individual workpieces and empty workpiece carriers are made available. The IME inductive proximity sensor detects the position of the workpiece carrier. The WL12-3 small photoelectric sensor monitors whether a workpiece is placed on the carrier. Both signals are used to control the process.

Recommended products

W12-3 . . . . . G-528

D

Component detection in a crossbar robot

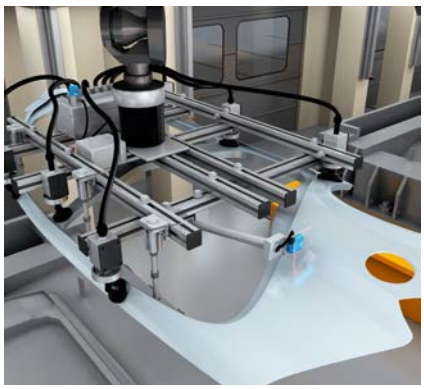

The WT12L-2 small photoelectric sensor checks whether the component is located in the gripper of the robot and whether the component has therefore been removed from the press tool. This prevents mechanical damage to the press.

Recommended products

W12-2 Laser G-510

Tracking the sheet roll

The WTB27-3 photoelectric proximity sensor monitors the presence of the sheet roll at various points throughout the industrial manufacturing process. It is immune to ambient light and optical reflections. The continuous flow of material while the plate shears are operating is monitored reliably.

Recommended products

W27-3 . . . . . H-616

Detection of assigned tool locations

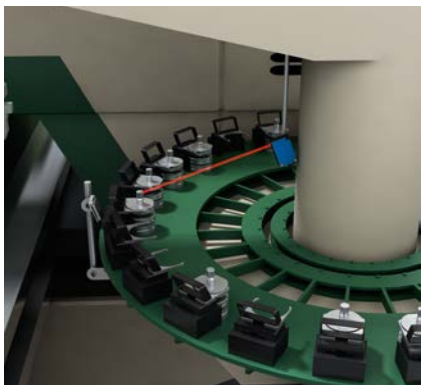

The machining process on a punching machine requires different tools, which are provided by a tool magazine. The assignment of the tool magazine location and the correct positioning of a tool holder are reliably detected using the W27-3 compact photoelectric sensor.

Recommended products

W27-3 . . . . . H-616

End of material detection

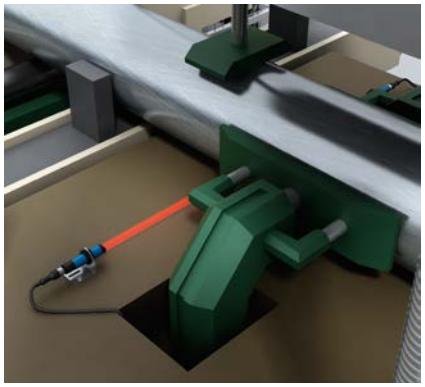

A VSE180-2 cylindrical photoelectric sensor detects the presence of the raw material in the saw. Its digital signal is used to control the machine in harsh environments.

Recommended products

V180-2 . . . . . I-742

Stamp breakage monitoring

In press or stamping tools, the inductive proximity sensor IQ Flat detects whether the metal workpiece is correctly positioned. The small photoelectric sensor WTB9L-3 – mounted outside of the tool – precisely detects workpiece characteristics. The stamp breakage monitoring works for shiny surfaces too: with the MultiTask photoelectric sensor MultiPac.

Recommended products

W9L-3 . . . . . G-470 MultiPac E-130

Optical inline quality checking

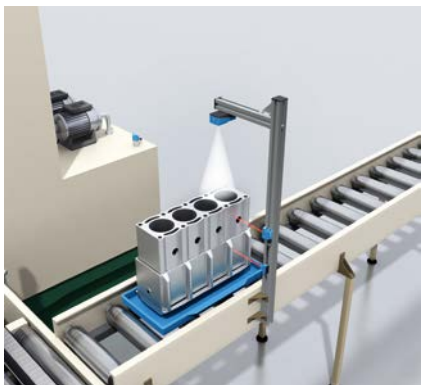

For full quality checking, correct processing of the motor block must be checked. The Inspector vision sensor checks that the holes and cutouts are present and correct. The precise light spot of the WT12L-2 reflection photoelectric sensor detects even the smallest holes on the motor block.

Recommended products

W12-2 Laser. G-510

Positioning of the sheet pallet

A WSE12-3 small photoelectric through-beam sensor or a WTB12-3 photoelectric proximity sensor precisely detect the presence of the sheet pallet or the position of the pallet edge thanks to a fast switching frequency. They ensure that the vacuum nozzle or the transfer carriage of the material infeed can place the sheets correctly and that there is always a gap between the material lift and the interim shelf. This eliminates collisions and reduces downtime.

Recommended products

W12-3 . . . . . .G-528

E

Detecting, verifying, positioning, counting – photoelectric sensors from SICK

SICK's vast range of photoelectric sensors offer precise optics and advanced technology, creating market-leading solutions with sensor intelligence. By using the latest ASIC and LED technologies, these sensors offer the highest level of operational reliability regardless of any interference factors. Additional sensor information can be used to simplify modern production processes.

This extensive range of photoelectric sensors is used in many automation applications around the world.

8015327/2014-02-08

E

MultiTask photoelectric sensors




Focusing on efficiency: SICK MultiTask photoelectric sensors offer optimum performance at low investment costs

E

Reliable gapless sensing: DeltaPac from SICK perfects production

Products can be counted and detected on the belt in a way that was not possible before. Without gaps. Without delays. DeltaPac accurately detects the transition between successive packaging items or workpieces. This ensures faster, smarter, more economical, and more reliable production. In other words: DeltaPac is a patented technological world first, implemented in a unique way.
DeltaPac closes every gap. It eliminates product separation on the belt and reduces downtime caused by collisions. DeltaPac is an energy-efficient solution that increases production and requires less hardware, opening up new applications for systems engineering. Its control systems ensures users are always aware of what is happening in the system. DeltaPac: The new, uniquely efficient photoelectric sensor from SICK.

DELTA-S

DeltaPac E-114

- Zero gap detection

MultiLine Sensor: The detection of complex, textured objects made easy

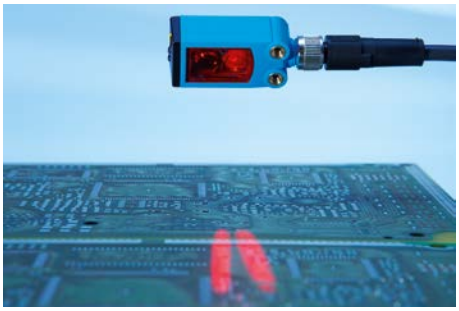

The MultiLine sensor meets customer requirements in ways that optical sensors were previously incapable of handling. With an unprecedented level of detection reliability, this sensor can reliably detect objects with an extraordinarily wide range of holes, cutouts, reflective or transparent areas, or contours. This is made possible thanks to an innovative multi-sensor principle, which evaluates two visible light lines independently of one another. The sensor output remains switched on even when a section of or an entire light line of the sensor leaves the object.
A further benefit is the fact that it is not necessary to keep resetting the sensor to handle different detection tasks. If you need to detect coffee packaging, soup packets, or chocolate bars from above – the MultiLine sensor is the optimum solution.

MultiLine Sensor . . . E-124

- Detecting perforated objects
- Detecting uneven, shiny objects
- Detecting objects wrapped in film

MultiPac: For extreme detection

When it comes to optical sensors, detecting very shiny, highly reflective, and uneven surfaces, such as metal, presents just as much of a challenge as detecting packaging units wrapped in film. The optimum solution is the MultiPac sensor from SICK. Its secret is based around three key features: Two completely separate receiver systems double the sensor's detection capability, a high-performance LED generates an extremely high light intensity, and the detection algorithm controls the complex evaluation process. So simple, yet so impressive. The sensor can be mounted up to 500 mm above the conveying line, enabling an extremely wide range of packaging unit types and heights to be detected with only one fixed sensor position. With different packaging unit heights, the mechanical position adjustment that was often required becomes unnecessary, significantly reducing effort and expense for users.

MultiPac E-130

- Detecting uneven, shiny objects
- Detecting objects wrapped in film

Reflex Array: The photoelectric sensor with the light array – multifaceted and economical

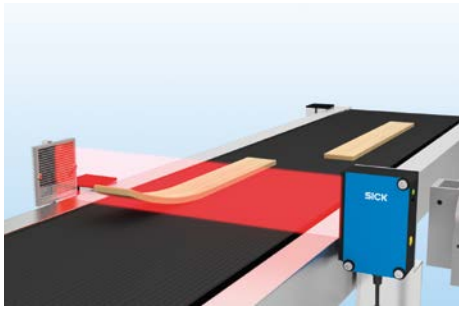

The detection of misshapen or uneven objects, or objects of varying height presents a particular challenge. Reliably detecting the leading edge in such cases generally requires the installation of two photoelectric sensors positioned one on top of the other or the use of a light grid. This of course results in high installation costs. With the Reflex Array sensor, however, SICK offers a cost-effective alternative: A housing and a connecting cable, while also ensuring reliable detection, regardless of position, of all objects within its innovative light array. Other features include the capability to detect transparent objects and the prevention of multiple switching when detecting perforated objects. Four variants of the Reflex Array photoelectric sensor are available for a wide range of requirements with regard to detection height and minimum object size.

Reflex Array. E-134

- Detecting transparent objects
- Detecting perforated objects
- Detecting objects with position tolerances

TranspaTect: Detecting transparent objects in a new dimension

Need to detect transparent objects? Only possible with a reflector.
This response is now a thing of the past. New technology allows the TranspaTect photoelectric proximity sensor to detect transparent trays and bottles without any reflectors, instead using the system itself as a reference surface. All you need is a stable, matte background, such as a machine element. The TranspaTect can also reliably detect very shiny, highly reflective, and uneven surfaces. This not only saves time and costs, it also opens up new machine design possibilities. In addition, continuous threshold adaptation guarantees optimum operational safety with respect to industrial contamination, e.g., for packaging processes in the food, beverage, and pharmaceutical industries. TranspaTect clearly and reliably identifies transparent objects.

TranspaTect E-142

- Detecting uneven, shiny objects
- Detecting transparent objects

The green light for accumulation conveyors

SICK ZoneControl solutions control product flow

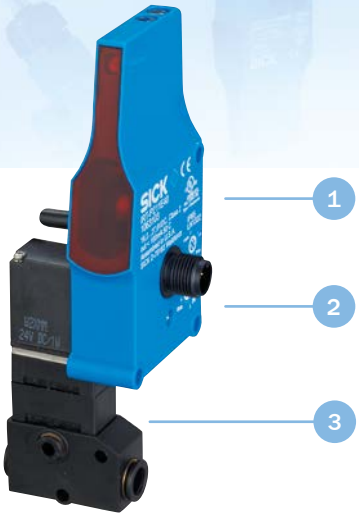

The three key features of a ZoneControl solution

In towns and cities, traffic lights are mainly responsible for controlling the flow of vehicles on the roads. ZoneControl solutions from SICK fulfill a very similar role when it comes to controlling the flow of products on accumulation conveyors – and all without the need for a programmable logic controller (PLC) or another type of external control system. Accumulation conveyors briefly hold a product before re-releasing it for the next phase in the production process. This must involve zero pressure accumulation (ZPA) in order to prevent damage or products falling from the belt.
Three product families ensure that everything runs smoothly during the ZPA process. ZoneControl solutions are commissioned via plug-and-play and are extremely straightforward: Simply connect the ZoneControl products in a series, install the sensor, and then connect it to the pneumatic line or motorized rollers. There is no need to configure a PLC, use a laptop, or carry out expensive field wiring.

1 **Sensor**
- Reliably detects the conveyed product

2 **Integrated logic**
- No PLC, no laptop
- Sensors are connected in series

3 **Direct transmission to the conveying equipment**
- Pneumatic drive or
- Motorized rollers

Variants

Each of these ZoneControl products are connected in a series and operate according to one of two feed logics, depending on the application in question: **Single feed** (with or without sleep function) or **block feed** (slug).
Whether the accumulation conveyor is powered **pneumatically** or by **motorized rollers**, ZPA is incredibly simple with ZoneControl solutions from SICK.

In order to satisfy various installation situations, four different sensor variants are available:
- **Between the rollers** of the conveyor, **R/IR** from page E-148
- **Over the conveyor**, **WLR** from E-160
- **On the side frame** of the conveyor, **ZLM** from page E-164

Special options are also available for mounting each sensor on the accumulation conveyor.

R/IR

WLR

ZLM

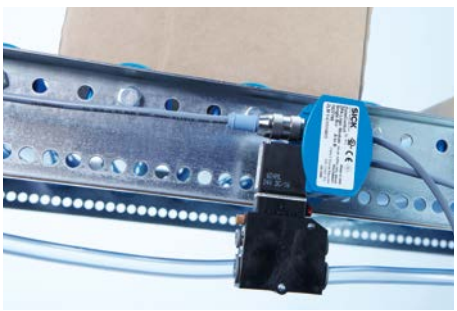

www.sick.com/zonecontrol

Conveying logic

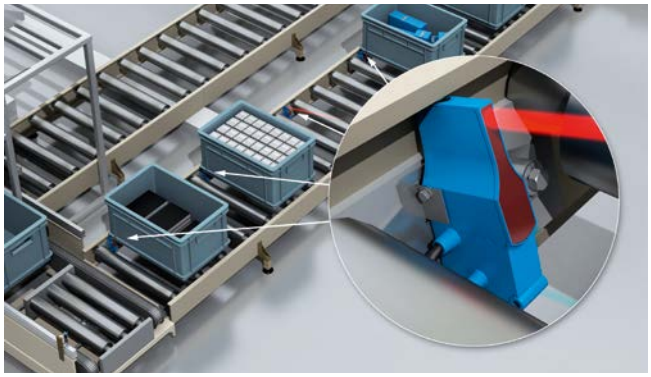

In the case of **single feed** (with or without sleep function), the conveyed product that has been detected is stopped and prevented from being transported further until the next zone is free.
If there are two successive zones, the downstream section is brought to a halt in sleep mode if no products are detected for nine seconds.

Block feed (slug) allows a larger quantity of products to travel downstream, typically to the picking zone. In this case, no zone is stopped in the accumulation conveyor until the conveyed product has reached the last downstream section.

Two successive sensors detect the conveyed product in different zones:

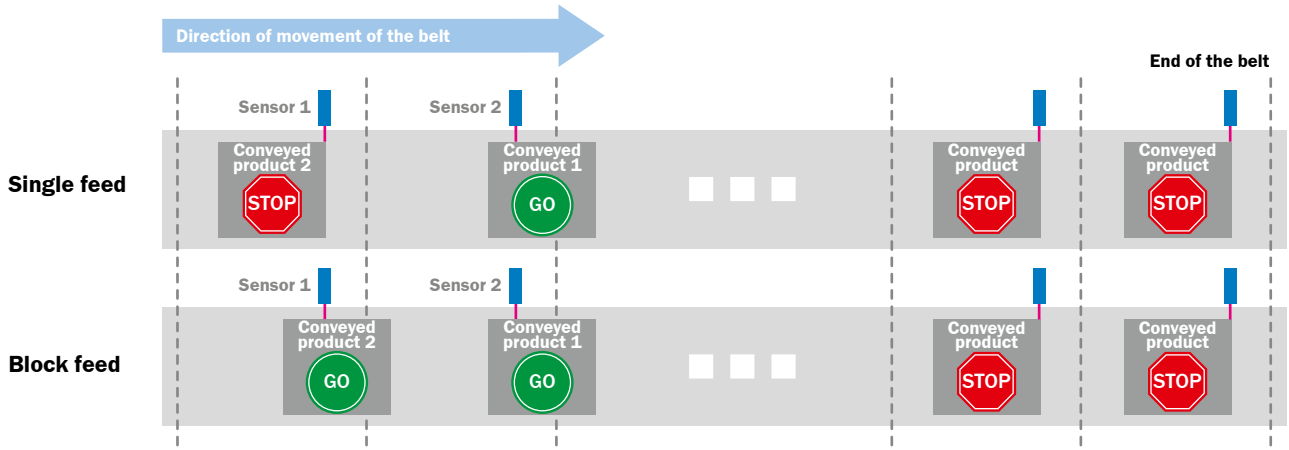

E

Overview

				Mounting			Single feed logic		Type of release		Product features					Page
	1 Sensor	2 Logic unit	3 Valve [1]	Between the rollers	On the side frame	Over the conveyor	Single feed	Block feed	Single release	Slug release	Max. sensing range (mm)	Enclosure rating	AC (alternating current)	Compatible with motorized rollers	Connection to external valve	
R	■			■							900	IP 67	■			E-148
IR	■	■	■	■			■		■	■	900	IP 65		■	■	E-148
WLR	■	■				■	■	■	■	■	9,000	IP 67	■		■	E-160
ZLM		■	■		■		■	■	■	■	... [1]	IP 65				E-164

[1] Connection to all discrete DC sensors.

Overview of MultiTask photoelectric sensors

	Housing properties				Sensor properties										
	Material		Enclosure rating												
	Plastic	Metal	IP 66	IP 67	Photoelectric proximity sensor	Multi-background suppression	Background suppression	Foreground suppression	Photoelectric retro-reflective sensor	Reflex Array	MultiLine	MultiPac	IO-Link	AutoAdapt	
DeltaPac NEW															
WTD20	■			■	■								■		
MultiLine Sensor															
MultiLine	■		■	■	■	■					■				
MultiPac															
WTB27-3 MultiPac	■		■	■	■		■					■			
Reflex Array															
WL27-3 Reflex Array	■			■						■				■	
TranspaTect NEW															
WTF12G-3		■		■	■			■						■	
ZoneControl NEW															
R	■			■	■		■								
IR	■			■	■		■								
WLR210	■								■						
ZLM	■														

E

Photoelectric proximity sensors

	Maximum sensing range	Dimensions (W x H x D)	Page
DeltaPac	30 mm ... 40 mm	42 mm x 42 mm x 45 mm	E-114
MultiLine Sensor	5 mm ... 120 mm	16 mm x 39.5 mm x 12 mm	E-124
MultiPac	30 mm ... 500 mm	24.6 mm x 80.6 mm x 54.8 mm	E-130
TranspaTect	150 mm .... 700 mm	15.6 mm x 48.5 mm x 42 mm	E-142
R	60 mm ... 900 mm	20.6 mm x 99.2 mm x 48.9 mm	E-148
IR	60 mm ... 900 mm	59.9 mm x 151.9 mm x 48.9 mm	E-148
Reflex Array	0 m ... 4.5 m	24.6 mm x 80 mm x 54.2 mm	E-134

	Optical properties							Special applications							Page
	Type of light/Light sender			Light spot geometry		Technology									
	LED infrared light	LED red light	PinPoint LED red light	Line-shaped light spot	Light array	SIRIC®	Delta-S-Technology®	ZoneControl	Detecting transparent objects	Detecting perforated objects	Detecting uneven, shiny objects	Detecting objects wrapped in film	Detecting objects with position tolerances	Zero gap detection	
			■			■	■							■	E-114
			■	■		■				■	■	■			E-124
			■			■					■	■			E-130
			■		■	■			■	■	■		■		E-134
			■						■		■	■			E-142
	■					■		■							E-148
	■					■		■							E-148
		■						■							E-160
								■							E-164

E

Photoelectric retro-reflective sensors

	Maximum sensing range	Dimensions (W x H x D)	Page
WLR210	0 m ... 9 m	45 mm x 73.7 mm x 48.6 mm	E-160

Product family overview

		
	DeltaPac	**MultiLine Sensor**
	Bridging the Gap	Two is better than one
Technical data overview		
Dimensions (W x H x D)	42 mm x 42 mm x 45 mm	16 mm x 39.5 mm x 12 mm
Sensing range max.		
Delta-S-Technology®	30 mm ... 40 mm	–
Photoelectric proximity sensor	–	5 mm ... 120 mm
Reflex Array	–	–
Light source	PinPoint LED	PinPoint LED
Type of light	Visible red light	Visible red light
Enclosure rating	IP 67	IP 66, IP 67
Housing material	Plastic	Plastic
At a glance		
	• Delta-S-Technology®: four PinPoint emitters and two energy scales combined with SIRIC® and distance measurement technology • Direction-independent object contours with radius up to 20 mm • For conveyor speeds up to 3 m/s or production capacities up to 200.000 packages per hour • Pre-configured sensors and individual setting via IO-Link • Compact housing (42 mm x 42 mm x 45 mm) with an IP 67 enclosure rating	• Two logical and intelligently linked sensors with background suppression in one miniature housing offer the highest ruggedness for object detection • Consistent, reliable detection of structures and perforated objects such as e-cards • Consistent, reliable detection of reflective and irregular objects such as blister packs and soup sachets on conveyor belts • Maximum sensing range 120 mm • Simple adjustment via teach-in button
Detailed information	➜ E-114	➜ E-124

E

			
	MultiPac	**Reflex Array**	**TranspaTect**
	MultiPac – for extreme detection	The sensor with the light band: multifaceted and economical	One thing is clear – no reflector needed
	24.6 mm x 80.6 mm x 54.8 mm	24.6 mm x 80 mm x 54.2 mm	15.6 mm x 48.5 mm x 42 mm
	–	–	–
	30 mm ... 500 mm	–	150 mm ... 700 mm
	–	0 m ... 4.5 m	–
	HighPower LED	PinPoint LED	PinPoint LED
	Visible red light	Visible red light	Visible red light
	IP 66, IP 67	IP 67	IP 66, IP 67
	Plastic	Plastic	Metal
	• Two redundant receiver arrays from SICK • The newest SICK chip technology • Intense, visible red HighPower LED • Sensing distance up to 500 mm • Fast and precise commissioning thanks to the highly visible light spot	• Detects objects > 12 mm within a 50 mm light array, regardless of position • Sensing range for detection from 0 m to max. 4.5 m • Minimum distance of 0.5 m between sensor and reflector for all variants • PinPoint technology for intense red light • Automatic adjustment of the switching threshold when there is contamination	• High-performance SICK technology • No reflectors required • Existing machine parts are used as reference target • AutoAdapt for continuous threshold adaptation in contaminated conditions • PinPoint LED with bright and precise light spot • Easy-to-use teach-in button • Status LEDs visible from all sides • Rugged metal housing (PTFE coating available on request)
	➜ E-130	➜ E-134	➜ E-142

E

Product family overview

ZoneControl

Zero Pressure Accumulation made easy

Technical data overview	
Dimensions (W x H x D)	20.6 mm x 99.2 mm x 48.9 mm 50 mm x 147.4 mm x 48.9 mm 59.9 mm x 151.9 mm x 48.9 mm
Light source	LED
Type of light	Infrared light
Enclosure rating	IP 67 / IP 65
Housing material	Plastic
At a glance	
	• Three mounting versions: betweeen the rollers (IR/R), side frame mount (ZLM) and over the conveyor (WLR) • Three types of logic: single accumulation, single accumulation with sleep, block (slug) accumulation • Up to 50 ZoneControl solutions can be cascaded in one string • Fully animated simulation to ease selection and implementation • Standard zone lengths of 1m (3ft) or 2m (6 ft)
Detailed information	➜ E-148

E

		
	WLR	**ZLM**
	Zero Pressure Accumulation made easy	Side-mounted conveyor module with zone control intelligence
	45 mm x 73.7 mm x 48.6 mm	31 mm x 110 mm x 83 mm 30 mm x 110 mm x 70 mm 31 mm x 93 mm x 74 mm 31 mm x 105 mm x 74 mm
	LED	–
	Visible red light	–
	IP 67	IP 40
	Plastic	Plastic
	• Connects to any 9.4 mm DIN valve • Single or slug accumulation • Ideal for pneumatic actuators or motor-driven rollers • Daisy chain connection cables included for zone lengths of 1m (3 ft) and 2 m (6 ft) • AC power options	• Connects to any discrete DC voltage sensor • Single or slug accumulation • Ideal for pneumatic actuators • Daisy chain connection cable included for zone lengths of 1m (3ft) or 2m (6 ft) • Bolt-on or clip-on installation into the conveyor's side frame
	➜ E-160	➜ E-164

E

E

Bridging the Gap

Product description

For higher efficiency and quality in the packaging industry, the DeltaPac MultiTask photoelectric sensor utilizes Delta-S-Technology®, which combines four PinPoint emitters and two receivers with SIRIC® and distance measurement technology. The photoelectric sensor detects object contours with radii between 1 and 20 mm – independent of the direction and irrespective of the object's surface color –with the highest level of immunity to active and passive interference. The operating distance is between 30 and 40 mm to the front edge of the object. This means that packages do not need to be manually separated. Collisions are avoided. For better space and time utilization. The DeltaPac provides information about how many packages are present in the process for full production monitoring. The photoelectric sensor is available as a pre-configured device for fast and error-free commissioning. IO-Link, which is also available, enables tailored configuration and adaptation to match the desired application.

At a glance

- Delta-S-Technology®: four PinPoint emitters and two energy scales combined with SIRIC® and distance measurement technology
- Direction-independent object contours with radius up to 20 mm
- For conveyor speeds up to 3 m/s or production capacities up to 200.000 packages per hour
- Pre-configured sensors and individual setting via IO-Link
- Compact housing (42 mm x 42 mm x 45 mm) with an IP 67 enclosure rating

Your benefits

- Selective process optimization: information about the number of packages in the process enables better production monitoring
- Better space utilization: no mechanical devices are required to isolate packages, reducing the width of packaging systems and saving space
- Better time management: packages run in push-push mode, which prevents collisions and toppling, and reduces machine downtime
- Stable production for enhanced energy consumption
- Fast and intuitive commissioning due to pre-configuration
- Configuration via the IO-Link enables users to customize features based on the applications
- Space-saving mounting due to compact housing

→ **www.mysick.com/en/DeltaPac**
For more information, just enter the link or scan the QR code and get direct access to technical data, CAD design models, operating instructions, software, application examples and much more.

Additional information

Detailed technical data

Features

Sensor principle	Delta-S-Technology®
Dimensions (W x H x D)	42 mm x 42 mm x 45 mm
Housing design (light emission)	Rectangular
Sensing range max.	30 mm ... 40 mm [1] (depending on type)
Type of light	Visible red light
Light source [2]	PinPoint LED
Light spot size (distance)	4 x Ø 1 mm (30 mm)
Wave length	635 nm
Optimized parameterization for the following objects	Folding box or stacked empty packages / rounded, rounded out and prism shaped packaging, such as beverage cartons and soft packaging (depending on type)

[1] The sensing range max. refers to the object leading edge. The individual object leading edges must be within the operating range.

[2] Average service life of 100,000 h at T_A = +25 °C.

Mechanics/electronics

Supply voltage [1]	10 V DC ... 30 V DC
Ripple [2]	≤ 5 V_{pp}
Power consumption	≤ 70 mA [3]/≤ 160 mA (depending on type)
Output type	NPN/PNP (depending on type)
Output current $I_{max.}$	≤ 2 x 100 mA
Connection type	Cable, 2 m [4]/Male connector, M12 (depending on type)
Circuit protection	A [5], B [6], C [7]
Protection class	III
Weight	130 g
IO-Link	–/✔ (COM2) (depending on type)
Housing material	Bayblend
Enclosure rating	IP 67
Ambient operating temperature	–40 °C ... +55 °C
Ambient storage temperature	–40 °C ... +75 °C
Productivity max.	≤ 40,000 Stk./h/≤ 200,000 Stk./h/≤ 54,000 Stk./h (depending on type)
Object speed max.	0.6 m/s/1.2 m/s/3 m/s (depending on type)
Radius of the object contour	1 mm ... 20 mm (depending on type)
Switching accuracy	≤ 2 x radius
Repeatability (T_a not constant)	Typ. < 1 mm
Object width min.	≥ 10 mm/≥ 30 mm/≥ 20 mm (depending on type)
Object height min.	30 mm /50 mm (depending on type)

[1] Limit values, reverse-polarity protected, operation in short-circuit protected network: max. 8 A.

[2] May not exceed or fall short of V_S tolerances.

[3] At 24 V.

[4] Do not bend below 0 °C.

[5] A = V_S connections reverse-polarity protected.

[6] B = inputs and output reverse-polarity protected.

[7] C = interference suppression.

Ordering information

Other models available at www.mysick.com/en/DeltaPac

WTD20E, for folded boxes

- **Object speed max.:** 0.6 m/s
- **Productivity max.:** ≤ 40,000 Stk./h
- **Switch on delay Q_1 & Q_2:** ≤ 80 ms
- **Time delay off Q_1:** ≤ 80 ms
- **Pulse length (Q2):** ≤ 20 ms
- **Background suppression:** ≥ 60 mm
- **Object height min.:** 30 mm (The object heigh min. is relevant only for the installation of DeltaPac above the conveyor belt.)
- **Current consumption:** ≤ 70 mA

Object width min.	Radius of the object contour	Key feature of the object	Sensing range	Output type	Connection	Connection diagram	Model name	Part no.
≥ 10 mm	1 mm ... 2 mm	Edge	30 +/- 2 mm	NPN	Cable, 4-wire, 2 m, PVC	Cd-242	WTD20E-W1145	1065773
				PNP	Connector M12, 4-pin	Cd-243	WTD20E-V2445	1065772

E

WTD20E, IO-Link for folded boxes

- **Object speed max.:** 0.6 m/s
- **Productivity max.:** ≤ 200,000 Stk./h
- **Switch on delay Q_1 & Q_2:** 0 ms ... 255 ms
- **Time delay off Q_1:** 0 ms ... 255 ms
- **Pulse length (Q2):** 0 ms ... 63 ms
- **Background suppression:** ≥ 60 mm
- **Object height min.:** 30 mm (The object heigh min. is relevant only for the installation of DeltaPac above the conveyor belt.)
- **Current consumption:** ≤ 70 mA

Object width min.	Radius of the object contour	Key feature of the object	Sensing range	Output type	Connection	Connection diagram	Model name	Part no.
≥ 10 mm	1 mm ... 2 mm	Edge	30 +/- 2 mm	PNP, IO-Link	Connector M12, 4-pin	Cd-244	WTD20EC-V2449	1064783

WTD20E, rounded, rounded out and prism shaped packaging

- **Object speed max.:** 1.2 m/s
- **Productivity max.:** ≤ 54,000 Stk./h
- **Switch on delay Q_1 & Q_2:** ≤ 60 ms
- **Time delay off Q_1:** ≤ 60 ms
- **Pulse length (Q2):** ≤ 20 ms
- **Background suppression:** ≥ 80 mm
- **Object height min.:** 50 mm (The object heigh min. is relevant only for the installation of DeltaPac above the conveyor belt.)

Object width min.	Radius of the object contour	Key feature of the object	Sensing range	Output type	Current consumption	Connection	Connection diagram	Model name	Part no.
≥ 30 mm	5 mm ... 20 mm	Rounded edges, rounded out body and prism shaped	30 mm ... 40 mm	NPN	≤ 70 mA	Cable, 4-wire, 2 m, PVC	Cd-242	WTD20E-W1114	1064779
≥ 20 mm	2 mm ... 5 mm		30 mm ... 40 mm	PNP	≤ 160 mA	Connector M12, 4-pin	Cd-243	WTD20E-V2414	1064778

WTD20E, IO-Link for rounded, rounded out and prism shaped packaging

- **Object speed max.:** 3 m/s
- **Productivity max.:** ≤ 200,000 Stk./h
- **Switch on delay Q_1 & Q_2:** 0 ms ... 255 ms
- **Time delay off Q_1:** 0 ms ... 255 ms
- **Pulse length (Q2):** 0 ms ... 63 ms
- **Background suppression:** ≥ 80 mm
- **Object height min.:** 50 mm (The object heigh min. is relevant only for the installation of DeltaPac above the conveyor belt.)
- **Current consumption:** ≤ 70 mA

Object width min.	Radius of the object contour	Key feature of the object	Sensing range	Output type	Connection	Connection diagram	Model name	Part no.
≥ 20 mm	2 mm ... 20 mm	Rounded out body and prism shaped	30 mm ... 40 mm	PNP, IO-Link	Connector M12, 4-pin	Cd-244	WTD20EC-V2419	1064782

Dimensional drawings

Dimensions in mm (inch)

E

WTD20E-V, cable

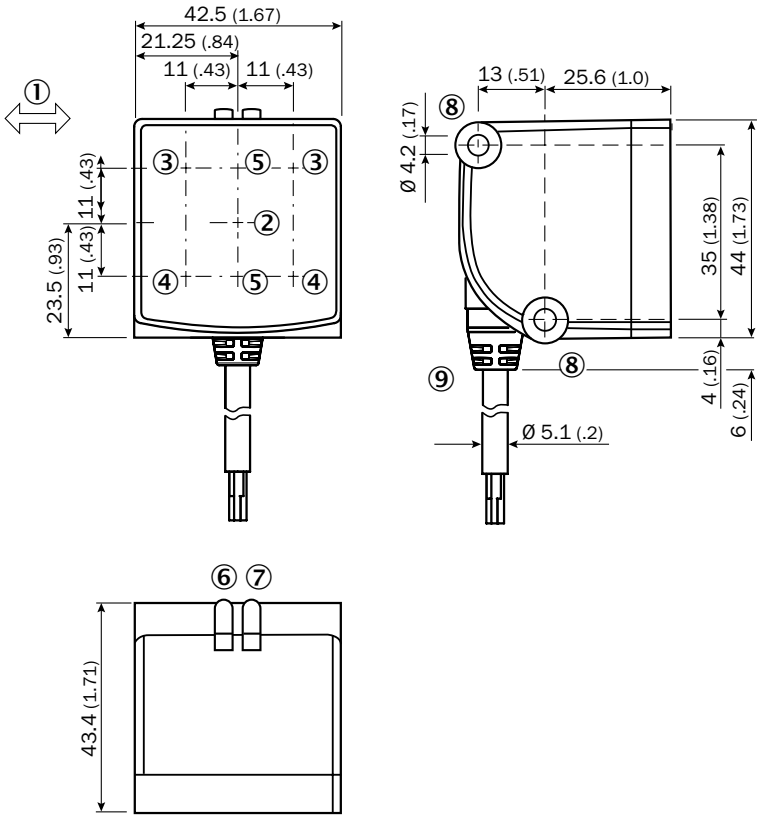

① Standard direction
② Center of optical axis, sender
③ Center of optical axis, receiver (first energy scale)
④ Center of optical axis, receiver (second energy scale)
⑤ Optical axis, receiver
⑥ LED indicator orange:
status of received light beam, presence signal Q1
⑦ Status indicator LED green: power on
⑧ Mounting hole
⑨ Connection (rotatable)

WTD20E-V/W11xx, connector

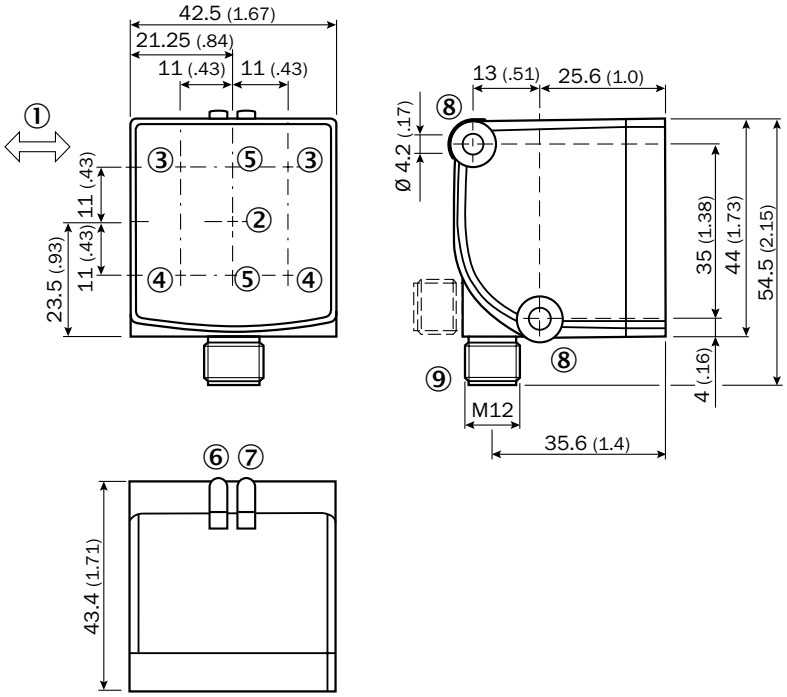

① Standard direction
② Center of optical axis, sender
③ Center of optical axis, receiver (first energy scale)
④ Center of optical axis, receiver (second energy scale)
⑤ Optical axis, receiver
⑥ LED indicator orange:
status of received light beam, presence signal Q1
⑦ Status indicator LED green: power on
⑧ Mounting hole
⑨ Connection (rotatable)

E

Sensing range in detail

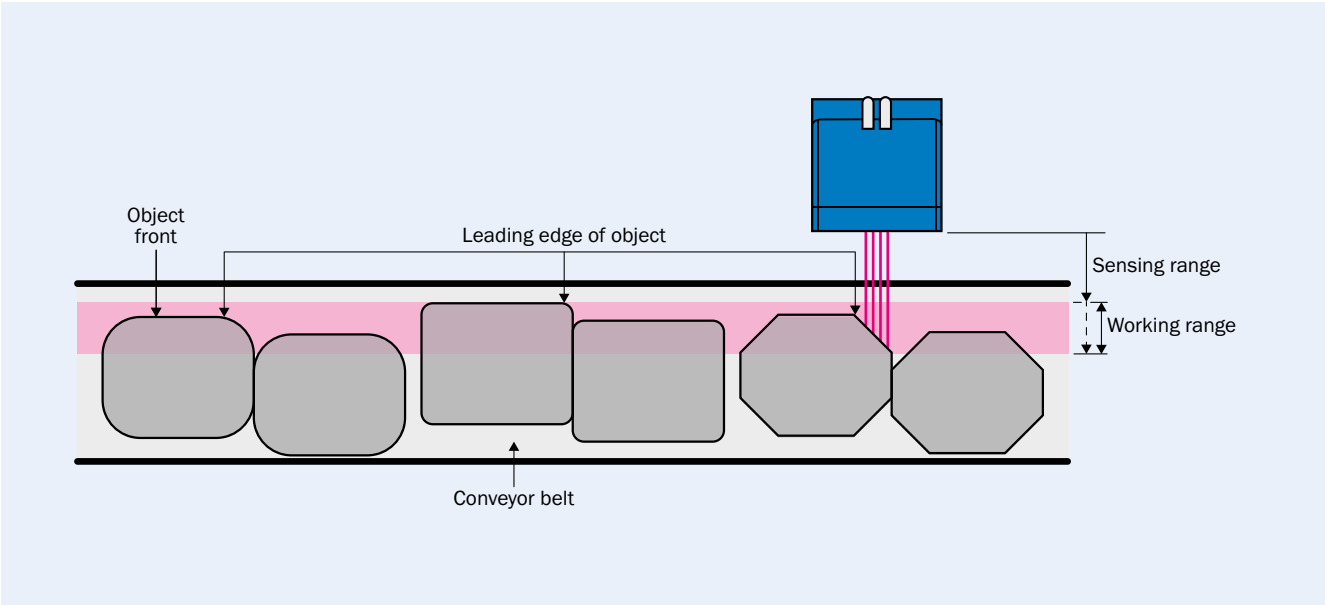

Productivity key figures

WTD20E-V/Wxx4x, edge, productivity

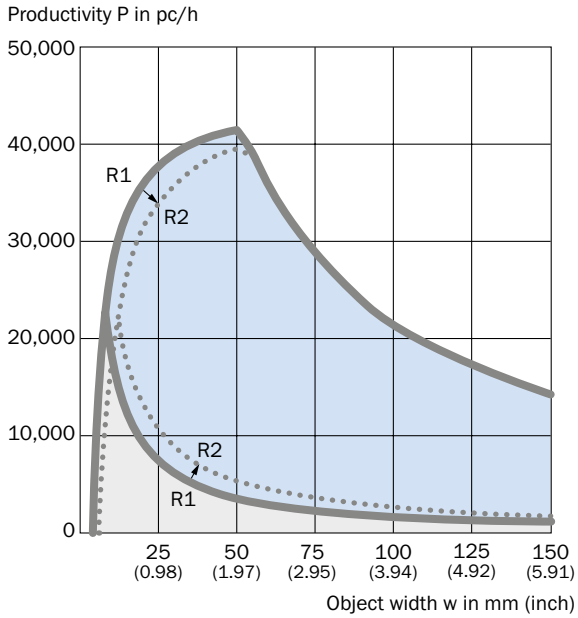

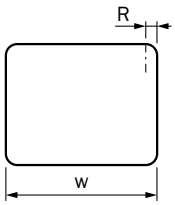

Parameter example, dimensions in mm (inch)

Object width	Object radii	Productivity min.	Productivity max.
25 (0.98)	1 (0.04)	7,500 pc/h	38,000 pc/h
75 (2.95)	2 (0.08)	3,500 pc/h	28,500 pc/h

= R1, Radii of 1 mm
= R2, Radii of 2 mm
= Working range
= Maximal working range

WTD20E-V/Wxx4x, edge, speed

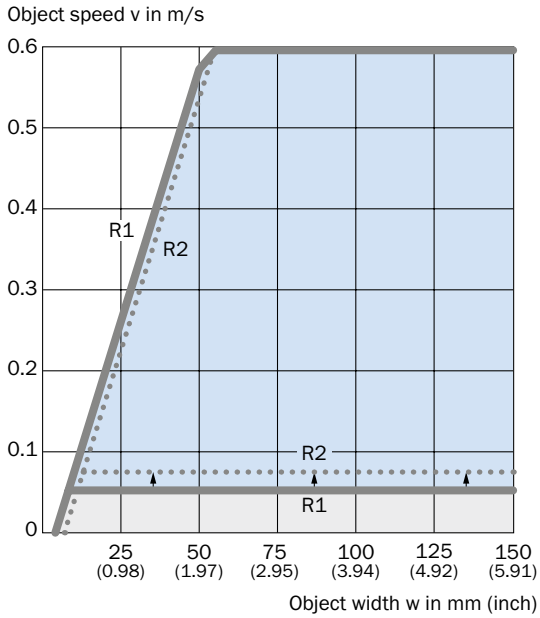

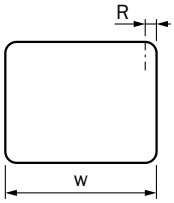

Parameter example, dimensions in mm (inch)

Object width	Object radii	Object speed min.	Object speed max.
25 (0.98)	1 (0.04)	0.05 m/s	0.26 m/s
75 (2.95)	2 (0.08)	0.08 m/s	0.6 m/s

= R1, Radii of 1 mm
= R2, Radii of 2 mm
= Working range
= Maximal working range

WTD20E-V/Wxx1x, rounded edges, productivity

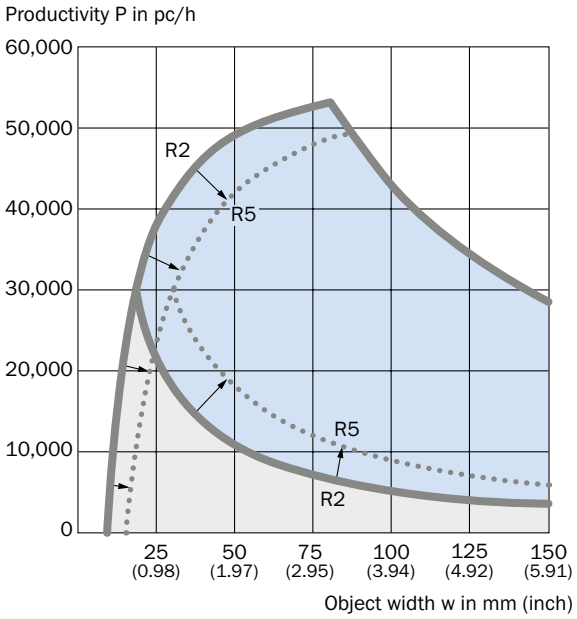

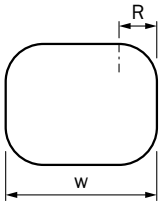

Parameter example, dimensions in mm (inch)

Object width	Object radii	Productivity min.	Productivity max.
75 (2.95)	2 (0.08)	7,000 pc/h	53,000 pc/h
125 (4.92)	5 (0.20)	7,000 pc/h	34,500 pc/h

E

= R2, Radii of 2 mm
= R5, Radii of 5 mm
= Working range
= Maximal working range

WTD20E-V/Wxx1x, rounded edges, speed

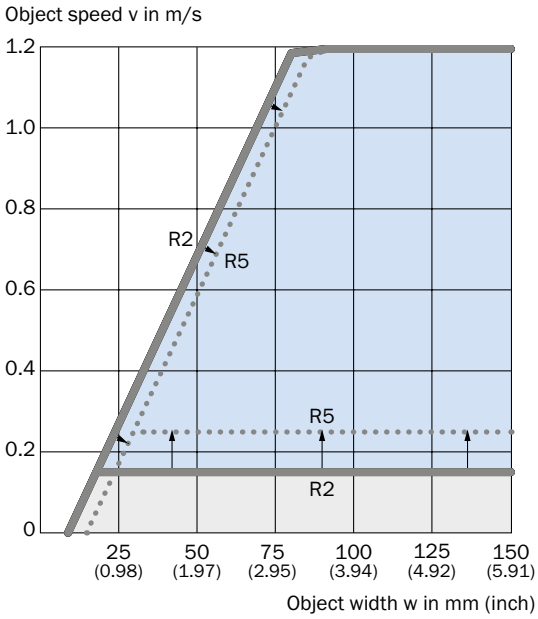

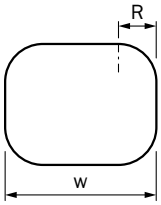

Parameter example, dimensions in mm (inch)

Object width	Object radii	Object speed min.	Object speed max.
75 (2.95)	2 (0.08)	0.15 m/s	1.1 m/s
125 (4.92)	5 (0.20)	0.25 m/s	1.2 m/s

= R2, Radii of 2 mm
= R5, Radii of 5 mm
= Working range
= Maximal working range

WTD20E-V/Wxx1x, rounded out body and prism shaped, productivity

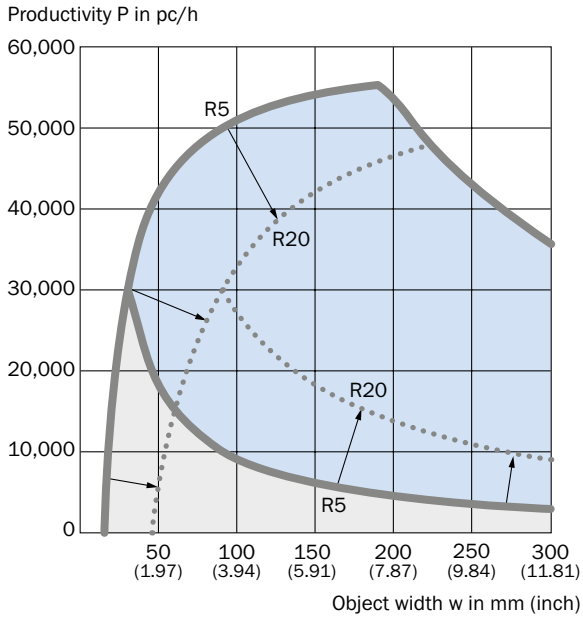

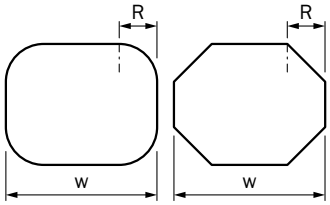

Parameter example, dimensions in mm (inch)

Object width	Object radii	Productivity min.	Productivity max.
200 (7.87)	5 (0.20)	4,500 pc/h	53,500 pc/h
250 (9.84)	20 (0.79)	11,000 pc/h	43,000 pc/h

= R5, Radii of 5 mm
= R20, Radii of 20 mm
= Working range
= Maximal working range

E

WTD20E-V/Wxx1x, rounded out body and prism shaped, productivity, speed

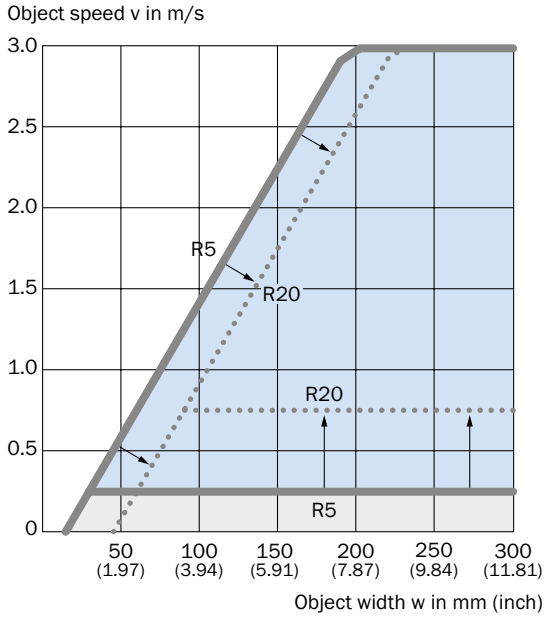

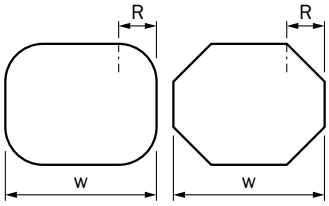

Parameter example, dimensions in mm (inch)

Object width	Object radii	Object speed min.	Object speed max.
200 (7.87)	5 (0.20)	0.25 m/s	3.0 m/s
250 (9.84)	20 (0.79)	0.75 m/s	3.0 m/s

= R5, Radii of 5 mm
= R20, Radii of 20 mm
= Working range
= Maximal working range

Connection diagram

Cd-242

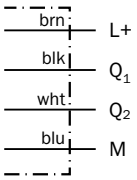

Cd-243

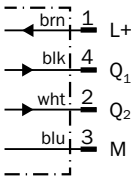

Cd-244

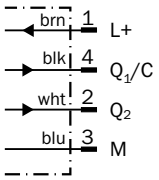

Recommended accessories

Plug connectors and cables

Connecting cable (female connector-open)

- **Cable material:** PVC
- **Connector material:** TPU

E

Figure	Connection type head A	Connection type head B	Connecting cable	Enclosure rating	Model name	Part no.
	Female connector, M12, 4-pin, straight	Cable, open conductor heads	2 m, 4-wire	IP 67	DOL-1204-G02M	6009382
			5 m, 4-wire	IP 67	DOL-1204-G05M	6009866
	Female connector, M12, 4-pin, angled	Cable, open conductor heads	2 m, 4-wire	IP 67	DOL-1204-W02M	6009383
			5 m, 4-wire	IP 67	DOL-1204-W05M	6009867

Connection cable (male-female connector)

- **Cable material:** PVC
- **Connector material:** TPU

Figure	Connection type head A	Connection type head B	Connecting cable	Enclosure rating	Model name	Part no.
	Female connector, M12, 4-pin, straight	Male connector, M12, 4-pin, straight	2 m, 4-wire	IP 67	DSL-1204-G02M	6022567
			5 m, 4-wire	IP 67	DSL-1204-G05M	6022569

Female connector (ready to assemble)

Figure	Connection type head A	Connection type head B	Connector material	Enclosure rating	Model name	Part no.
	Female connector, M12, 4-pin, straight	Screw-type terminals	PBT	IP 67	DOS-1204-G	6007302
	Female connector, M12, 4-pin, angled	Screw-type terminals	PBT	IP 67	DOS-1204-W	6007303

Male connector (ready to assemble)

Figure	Connection type head A	Connection type head B	Connector material	Enclosure rating	Model name	Part no.
	Male connector, M12, 4-pin, straight	Screw-type terminals	PBT	IP 67	STE-1204-G	6009932
	Male connector, M12, 4-pin, angled	Screw-type terminals	PBT	IP 67	STE-1204-W	6022084

Universal bar clamp systems

Figure	Material	Description	Model name	Part no.
	Zinc diecast	Universal bar clamp for mounting bars with 12 mm diameter	BEF-KHS-KH3	5322626
	Zinc plated steel (sheet), Diecast zinc (clamp)	Plate N10 for universal clamp bracket	BEF-KHS-N11N	2071081

E

Test and monitoring tools

Dimensions	Model name	Part no.
1.0 – 7.0 mm	Radius gauge	5328155
7.0 – 15.0 mm	Radius gauge	5328157
15.5 – 25.0 mm	Radius gauge	5328158

Reference materials

Dimensions	Material	Model name	Part no.
10 mm x 55 mm x 40 mm	ABS	Demonstration target	4077622

Cleaning agent

Figure	Description	Model name	Part no.
	Plastic cleaner and care product, anti-static	Plastic cleaner	5600006
	35 cm x 35 cm	Lens cloth	4003553

→ **For additional accessories, please see page L-861**

E

Two is better than one

Product description

The MultiLine sensor: two sensors in one housing with an intelligent logical linking. The MultiLine sensor proves itself in challenging situations as a rugged detector of flat and structured objects with an availability not achieved until now.

At a glance

- Two logical and intelligently linked sensors with background suppression in one miniature housing offer the highest ruggedness for object detection
- Consistent, reliable detection of structures and perforated objects such as e-cards
- Consistent, reliable detection of reflective and irregular objects such as blister packs and soup sachets on conveyor belts
- Maximum sensing range 120 mm
- Simple adjustment via teach-in button

Your benefits

- The MultiLine sensor facilitates faster production sequences since the distances between objects can be reduced
- The sensor position no longer needs to be modified for format changes since the sensor is able to detect objects independently of their position. This saves time and money
- The reliable signal of the sensor from the arriving to the departing edge places less demands on the control software since it no longer needs to be debounced or evaluated
- The MultiLine sensor offers high process reliability because all objects are detected independently of their structure, geometry and surface properties
- And placing the sensor into operation is as easy as pressing a button. A fast and reliable commissioning without complicated operating algorithms is thus given

Additional information

→ **www.mysick.com/en/MultiLine_Sensor**
For more information, just enter the link or scan the QR code and get direct access to technical data, CAD design models, operating instructions, software, application examples and much more.

Detailed technical data

Features

Sensor principle	Photoelectric proximity sensor
Detection principle	Multi-background suppression
Dimensions (W x H x D)	16 mm x 39.5 mm x 12 mm
Housing design (light emission)	Rectangular
Sensing range max.	5 mm ... 120 mm
Sensing range	15 mm ... 120 mm
Type of light	Visible red light
Light source [1]	PinPoint LED
Light spot size (distance)	5 mm x 22 mm (40 mm)/3 mm x 25 mm (40 mm)/(depending on type)
Wave length	650 nm
Adjustment	Single teach-in button
Special feature	Detection of transparent objects

[1] Average service life of 100,000 h at T_A = +25 °C.

Mechanics/electronics

Supply voltage [1]	10 V DC ... 30 V DC
Ripple [2]	< 5 V_{pp}
Power consumption [3]	≤ 30 mA
Output type	PNP/NPN (depending on type)
Output function	Complementary
Switching mode	Light switching /Light/dark-switching (depending on type)
Output current $I_{max.}$	≤ 100 mA
Response time [4]	< 1.2 ms
Switching frequency [5]	400 Hz
Connection type	Male connector [6]/Cable, 2 m [6] (depending on type)
Circuit protection	A [7], C [8], D [9]
Protection class	III
Weight	30 g
Housing material	ABS
Optics material	PMMA
Enclosure rating	IP 66, IP 67
Ambient operating temperature	–40 °C ... +60 °C
Ambient storage temperature	–40 °C ... +75 °C

[1] Limit values, operation in short-circuit protected network max. 8 A.
[2] May not exceed or fall short of V_S tolerances.
[3] Without load.
[4] Signal transit time with resistive load.
[5] With light/dark ratio 1:1.
[6] Do not bend below 0 °C.
[7] A = V_S connections reverse-polarity protected.
[8] C = interference suppression.
[9] D = outputs overcurrent and short-circuit protected.

E

E

Ordering information

Other models available at www.mysick.com/en/MultiLine_Sensor

- **Sensor principle:** photoelectric proximity sensor
- **Detection principle:** multi-background suppression
- **Sensing range max.:** 5 mm ... 120 mm
- **Adjustment:** single teach-in button

Sensing range max.	Light spot size (distance)	Output type	Switching mode	Connection	Connection diagram	Model name	Part no.
5 mm ... 120 m	5 mm x 22 mm (40 mm)	PNP	Light switching	Connector M8, 3-pin	Cd-043	WTB4-3P2192	1058268
			Light/dark-switching	Connector M8, 4-pin	Cd-084	WTB4-3P2292	1062850
	3 mm x 25 mm (40 mm)	NPN	Light/dark-switching	Cable, 4-wire, 2 m	Cd-094	WTB4-3N1192	1059272

Dimensional drawings

Dimensions in mm (inch)

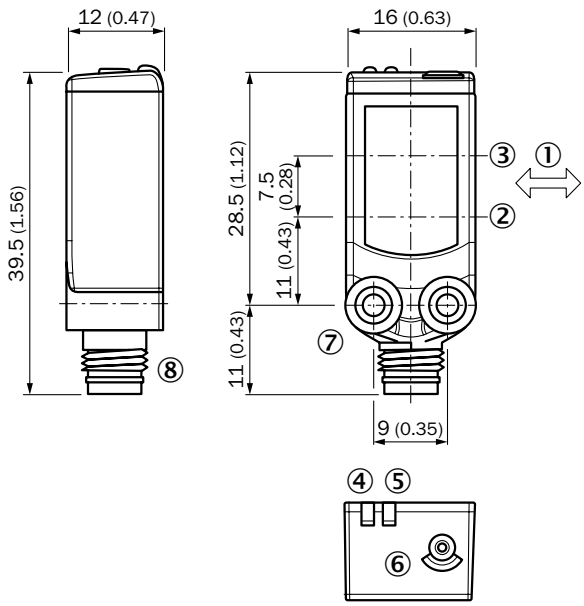

① Standard direction of the material being detected
② Optical axis sender
③ Optical axis receiver
④ Status indicator LED, yellow: Status of received light beam
⑤ Status indicator LED green: power on
⑥ Teach-in button
⑦ Threaded mounting hole M3
⑧ Connection

Adjustments

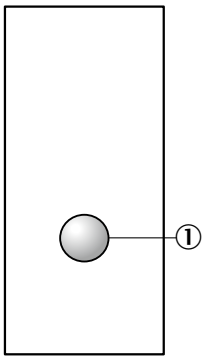

① Teach-in button

Light spot diameter

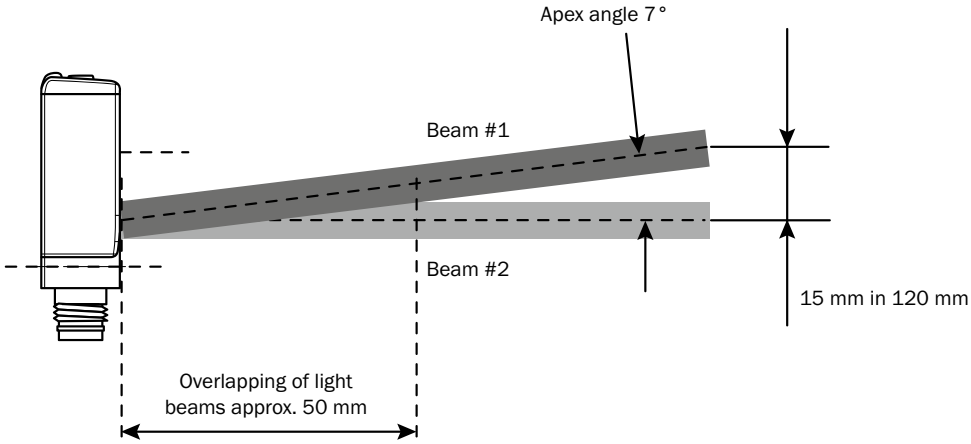

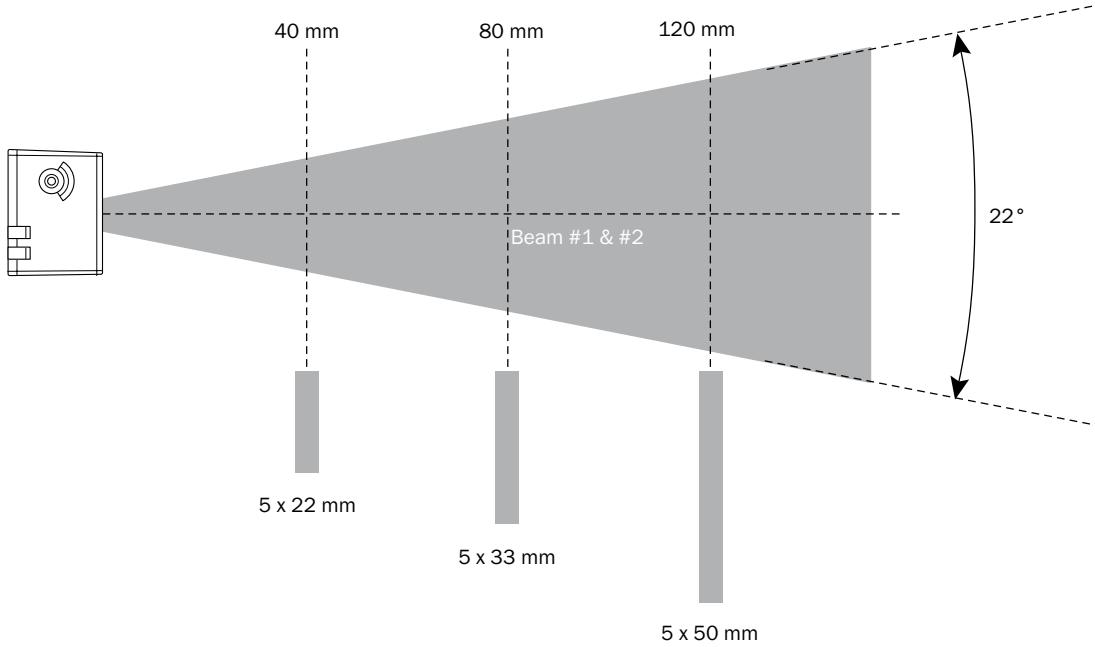

E

Connection diagram

Cd-043

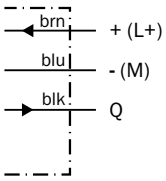

Cd-084

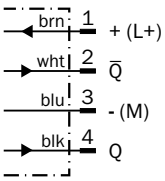

Cd-094

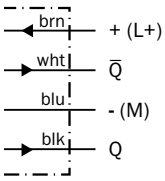

Recommended accessories

Mounting brackets/plates

Mounting brackets

Figure	Material	Description	Model name	Part no.
	Stainless steel 1.4571	Mounting bracket for wall mounting	BEF-W4-A	2051628
		Mounting bracket for floor mounting	BEF-W4-B	2051630

Plug connectors and cables

Connecting cable (female connector-open)

- **Cable material:** PVC
- **Description:** IP 67, IP 69K

E

Figure	Connection type head A	Connection type head B	Connecting cable	Connector material	Model name	Part no.
	Female connector, M8, 3-pin, straight	Cable, open conductor heads	2 m, 3-wire	TPU	DOL-0803-G02M	6010785
			5 m, 3-wire	TPU	DOL-0803-G05M	6022009
	Female connector, M8, 3-pin, angled	Cable, open conductor heads	2 m, 3-wire	TPU	DOL-0803-W02M	6008489
			5 m, 3-wire	TPU	DOL-0803-W05M	6022010
	Female connector, M8, 4-pin, straight	Cable, open conductor heads	2 m, 4-wire	PVC	DOL-0804-G02M	6009870
			5 m, 4-wire	PVC	DOL-0804-G05M	6009872
	Female connector, M8, 4-pin, angled	Cable, open conductor heads	2 m, 4-wire	PVC	DOL-0804-W02M	6009871
			5 m, 4-wire	PVC	DOL-0804-W05M	6009873

Female connector (ready to assemble)

Figure	Connection type head A	Connection type head B	Connector material	Enclosure rating	Model name	Part no.
	Female connector, M8, 3-pin, straight	Screw-type terminals	PBT	IP 67	DOS-0803-G	7902077
	Female connector, M8, 3-pin, angled	Pin penetration	PBT	IP 67	DOS-0803-W	7902078
	Female connector, M8, 4-pin, straight	Screw-type terminals	PBT	IP 67	DOS-0804-G	6009974
	Female connector, M8, 4-pin, angled	Pin penetration	PBT	IP 67	DOS-0804-W	6009975

Male connector (ready to assemble)

Figure	Connection type head A	Connection type head B	Connector material	Enclosure rating	Model name	Part no.
	Male connector, M8, 3-pin, straight	Screw-type terminals	PBT	IP 67	STE-0803-G	6037322
	Male connector, M8, 4-pin, straight	Screw-type terminals	PBT	IP 67	STE-0804-G	6037323

Universal bar clamp systems

Figure	Material	Description	Model name	Part no.
	Zinc plated steel (sheet), Diecast zinc (clamp)	Plate N05 for universal clamp bracket	BEF-KHS-N05	2051611
		Plate N08 for universal clamp bracket	BEF-KHS-N08	2051607

E

Terminal and alignment brackets

Alignment brackets

Figure	Material	Description	Model name	Part no.
	Plastic	Ball clamp bracket	BEF-GH-MINI01	2023160

→ **For additional accessories, please see page L-861**

E

MultiPac – for extreme detection

Product description

The MultiPac photoelectric sensor is designed for challenging applications which require detection of very shiny and irregular targets. Some examples are PET Bottles, food & beverage packets, glass or metal surfaces. These surfaces redirect the emitted light away from the sensor causing signal interruption. Using two independent receivers coupled with the newest chip technology, the MultiPac delivers reliable detection of these targets. Additionally, film wrapped pallets and other targets in the logistics branch can be detected using a higher angle of incidence. This removes the typical mounting restrictions associated with detecting these products. Thanks to its twin detection technology and flexible mounting, the MultiPac eliminates machine downtime due to loss of detection.

At a glance

- Two redundant receiver arrays from SICK
- The newest SICK chip technology
- Intense, visible red HighPower LED
- Sensing distance up to 500 mm
- Fast and precise commissioning thanks to the highly visible light spot

Your benefits

- Redundant receiver arrays provide reliable detection of shiny, gloss, dark, or irregular shaped objects without signal interruptions
- Products can be detected using a higher angle of incidence. This removes the typical mounting restrictions associated with detecting these products.
- In applications involving plastic wrapped bottles, the MultiPac replaces current solutions which require expensive mechanical height adjustment
- Allows overhead detection of product that is transported on a single conveyor belt but seperated into multiple lanes

Additional information

→ **www.mysick.com/en/MultiPac**
For more information, just enter the link or scan the QR code and get direct access to technical data, CAD design models, operating instructions, software, application examples and much more.

Detailed technical data

Features

Sensor principle	Photoelectric proximity sensor
Detection principle	Background suppression
Dimensions (W x H x D)	24.6 mm x 80.6 mm x 54.8 mm
Housing design (light emission)	Rectangular
Sensing range max. [1]	30 mm ... 500 mm
Sensing range	100 mm ... 500 mm
Type of light	Visible red light
Light source	PinPoint LED [2]
Light spot size (distance)	Ø 12 mm (500 mm)
Wave length	625 nm
Adjustment	Double teach-in button

[1] Object with 90 % reflectance (referred to standard white, DIN 5033)
[2] Average service life of 100,000 h at T_A = +25 °C.

Mechanics/electronics

Supply voltage [1]	10 V DC ... 30 V DC
Ripple [2]	≤ 5 V_{pp}
Power consumption [3]	≤ 55 mA
Output type	PNP/NPN (depending on type)
Output function	Complementary
Switching mode	Light/dark-switching
Signal voltage PNP HIGH/LOW	Approx. V_S – 2.5 V / 0 V
Signal voltage NPN HIGH/LOW	Approx. VS / < 2.5 V
Output current $I_{max.}$	≤ 100 mA
Response time [4]	≤ 5 ms
Switching frequency [5]	100 Hz
Connection type	Male connector
Circuit protection	A [6], B [7], C [8]
Protection class [9]	II
Weight	150 g
Housing material	ABS
Optics material	PMMA
Enclosure rating	IP 66, IP 67
Ambient operating temperature	–30 °C ... +60 °C
Ambient storage temperature	–40 °C ... +75 °C

[1] Limit values, operation in short-circuit protected network max. 8 A.
[2] May not exceed or fall short of V_S tolerances.
[3] Without load.
[4] Signal transit time with resistive load.
[5] With light/dark ratio 1:1.
[6] A = V_S connections reverse-polarity protected.
[7] B = inputs and output reverse-polarity protected.
[8] C = interference suppression.
[9] Reference voltage: 50 V DC.

E

E

Ordering information

Other models available at www.mysick.com/en/MultiPac

WTB27-3 MultiPac

- **Connection:** connector M12, 4-pin

Sensing range max. [1]	Output type	Connection diagram	Type	Part no.
30 mm ... 500 mm	PNP	Cd-083	WTB27-3P2483	1056384
	NPN	Cd-083	WTB27-3N2483	1056385

[1] Object with 90 % reflectance (referred to standard white, DIN 5033)

Dimensional drawings

Dimensions in mm (inch)

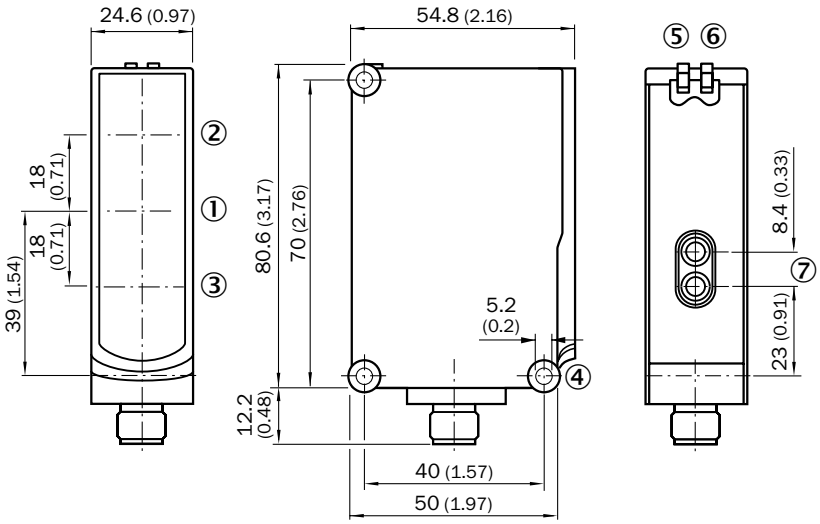

① Optical axis, sender
② Optical axis, receiver 1
③ Optical axis, receiver 2
④ Mounting hole ø 5.2 mm
⑤ Status indicator LED green: power on
⑥ Status indicator LED yellow: Status of received light beam
⑦ Sensing range adjustment: double teach button

Adjustments

Double teach-in button

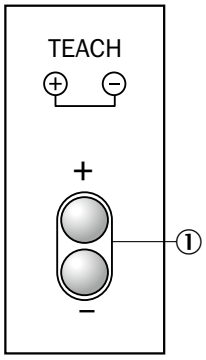

① Double teach-in button

Characteristic curves

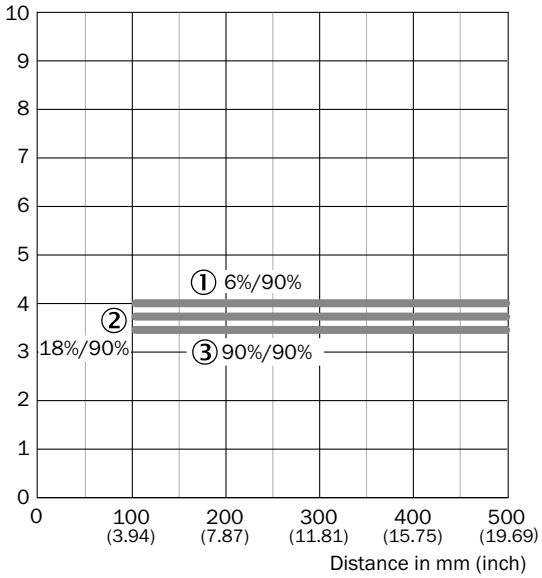

Connection diagram

Cd-083

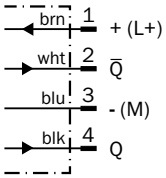

Recommended accessories

Mounting brackets/plates

Mounting brackets

Figure	Material	Description	Model name	Part no.
	Steel, zinc coated	Mounting bracket with hinged arm	BEF-WN-W27	2009122

Terminal and alignment brackets

Figure	Material	Delivery	Model name	Part no.
	Steel, galvanised (plate) Zinc, die-cast (clamp)	Incl. universal bar clamp and mounting material	BEF-KHS-A01	2022458

Plug connectors and cables

Connecting cable (female connector-open)

- **Cable material:** PVC
- **Connector material:** TPU

Figure	Connection type head A	Connection type head B	Connecting cable	Enclosure rating	Model name	Part no.
	Female connector, M12, 4-pin, straight	Cable, open conductor heads	2 m, 4-wire	IP 67	DOL-1204-G02M	6009382
			5 m, 4-wire	IP 67	DOL-1204-G05M	6009866
	Female connector, M12, 4-pin, angled	Cable, open conductor heads	2 m, 4-wire	IP 67	DOL-1204-W02M	6009383
			5 m, 4-wire	IP 67	DOL-1204-W05M	6009867

Device protection (mechanical)

Protective housing/pipes

Figure	Material	Description	Model name	Part no.
	Zinc plated steel (protective housing), Diecast zinc (clamp)	Protective housing for universal clamp	BEF-SG-W27	2039601

→ **For additional accessories, please see page L-861**

E

E

The sensor with the light band: multifaceted and economical

Product description

The Reflex Array is unique. The MultiTask photoelectric sensor detects the leading edge of small, flat, transparent, or uneven objects within its light band, regardless of position. Perforated objects are reliably detected without multiple adjustments. This considerably reduces installation costs and speeds up commissioning. The Reflex Array therefore offers major cost benefits over conventional solutions, which use several individual photoelectric sensors or a small light grid. The Reflex Array is available in four variants with varying detection heights and minimum object sizes.

At a glance

- Detects objects > 12 mm within a 50 mm light array, regardless of position
- Sensing range for detection from 0 m to max. 4.5 m
- Minimum distance of 0.5 m between sensor and reflector for all variants
- PinPoint technology for intense red light
- Automatic adjustment of the switching threshold when there is contamination

Your benefits

- Reduces the installation work required by up to 50% compared to light grids or multiple photoelectric sensors
- Detects objects > 12 mm within a 50 mm light array, regardless of position Three other variants are available for other objects.
- PinPoint technology and optical alignment procedure enables simple and quick commissioning
- Continuous Threshold Adjustment (AutoAdapt) ensures less downtime

Additional information

→ **www.mysick.com/en/Reflex_Array**
For more information, just enter the link or scan the QR code and get direct access to technical data, CAD design models, operating instructions, software, application examples and much more.

Detailed technical data

Features

Sensor principle	Reflex Array
Dimensions (W x H x D)	24.6 mm x 80 mm x 54.2 mm
Housing design (light emission)	Rectangular
Sensing range max.	0 m ... 2 m [1]/0 m ... 4.5 m [2] (depending on type)
Sensing range	0 m ... 2 m [1]/0 m ... 4.5 m [2] (depending on type)
Type of light	Visible red light
Light source [3]	PinPoint LED
Distance sensor to reflector	0.5 m ... 4.5 m
Adjustment	Single teach-in button
Continuous threshold adaption	✔
Special feature	Light band

[1] PL40A.
[2] PL80A.
[3] Average service life of 100,000 h at T_A = +25 °C.

Mechanics/electronics

Supply voltage [1]	10 V DC ... 30 V DC
Ripple [2]	≤ 5 V_{pp}
Power consumption [3]	≤ 35 mA
Output type	PNP
Output function	Complementary
Switching mode	Light/dark-switching
Signal voltage PNP HIGH/LOW	Approx. V_S – 2.5 V / 0 V
Output current $I_{max.}$	≤ 100 mA
Response time [4]	≤ 2.5 ms
Switching frequency [5]	200 Hz
Connection type	Cable with connector, M12, 270 mm [6]/Cable, 2 m [6]/Male connector, M12 (depending on type)
Circuit protection	A [7], B [8], C [9]
Protection class [10]	II
Weight	130 g
Housing material	ABS
Optics material	PMMA
Enclosure rating	IP 67
Ambient operating temperature	–30 °C ... +60 °C
Ambient storage temperature	–40 °C ... +75 °C

[1] Limit values, operation in short-circuit protected network max. 8 A.
[2] May not exceed or fall short of V_S tolerances.
[3] Without load.
[4] Signal transit time with resistive load.
[5] With light/dark ratio 1:1.
[6] Do not bend below 0 °C.
[7] A = V_S connections reverse-polarity protected.
[8] B = inputs and output reverse-polarity protected.
[9] C = interference suppression.
[10] Reference voltage: 50 V DC.

E

Ordering information

Other models available at www.mysick.com/en/Reflex_Array

Detection height: 24 mm

- **Output type:** PNP
- **Minimum distance sensor – Reflector:** 0.5 m

Sensing range max. [1]	Minimum object size	Connection	Connection diagram	Type	Part no.
0 m ... 1.5 m	≥ 5 mm	Cable with connector M12, 4-pin 270 mm PVC	Cd-083	WL27-3P3402S17	1051529

[1] PL40A.

Detection height: 30 mm

- **Output type:** PNP
- **Minimum distance sensor – Reflector:** 0.5 m

Sensing range max.	Minimum object size	Connection	Connection diagram	Type	Part no.
0 m ... 4.5 m [1]	≥ 8 mm	Cable with connector M12, 4-pin 270 mm PVC	Cd-083	WL27-3P3402S20	1060755

[1] PL80A.

E

Detection height: 45 mm

- **Output type:** PNP
- **Minimum distance sensor – Reflector:** 0.5 m

Sensing range max. [1]	Minimum object size	Connection	Connection diagram	Type	Part no.
0 m ... 3.5 m	≥ 10 mm	Cable with connector M12, 4-pin 270 mm PVC	Cd-083	WL27-3P3402S19	1056382

[1] PL80A.

Detection height: 50 mm

- **Output type:** PNP
- **Minimum distance sensor – Reflector:** 0.5 m

Sensing range max.	Minimum object size	Connection	Connection diagram	Type	Part no.
0 m ... 4.5 m [1] 0 m ... 2 m [2]	≥ 12 mm	Cable, 4-wire 2 m PVC	Cd-094	WL27-3P1102S16	1050825
		Connector M12, 4-pin	Cd-083	WL27-3P2402S18	1051577
		Cable with connector M12, 4-pin 270 mm PVC	Cd-083	WL27-3P3402S13	1046538
	≥ 16 mm	Cable with connector M12, 4-pin 270 mm PVC	Cd-083	WL27-3P3402S15	1048230

[1] PL80A.
[2] PL40A.

Dimensional drawings

Dimensions in mm (inch)

Detection height: 24 mm

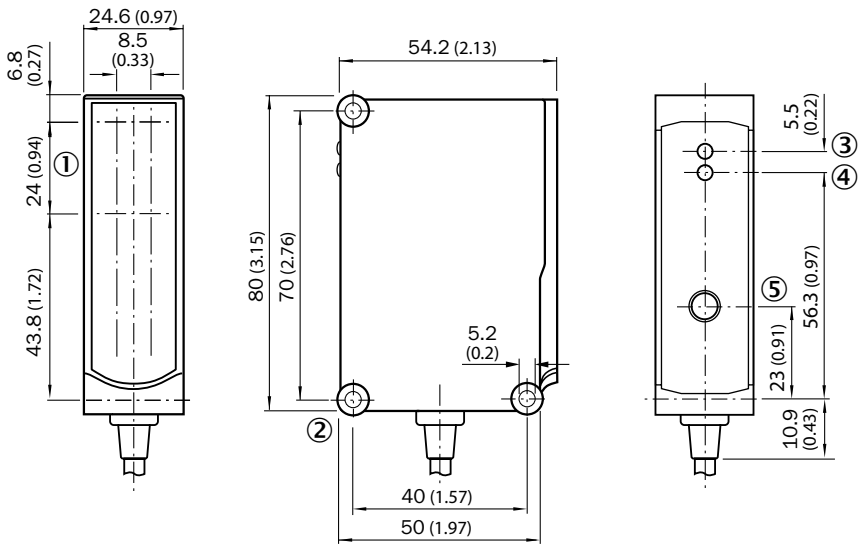

① Opening of light band
② Mounting hole ø 5.2 mm
③ Status indicator LED green: power on
④ Status indicator LED, yellow:
Status of received light beam
⑤ Sensitivity setting; single teach button

Detection height: 30 mm

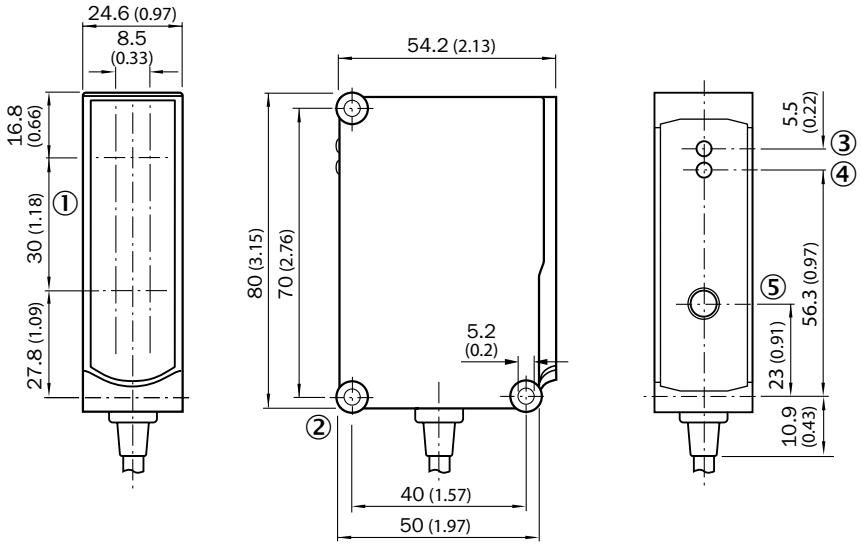

① Opening of light band
② Mounting hole ø 5.2 mm
③ Status indicator LED green: power on
④ Status indicator LED, yellow:
Status of received light beam
⑤ Sensitivity setting; single teach button

E

E

Detection height: 45 mm

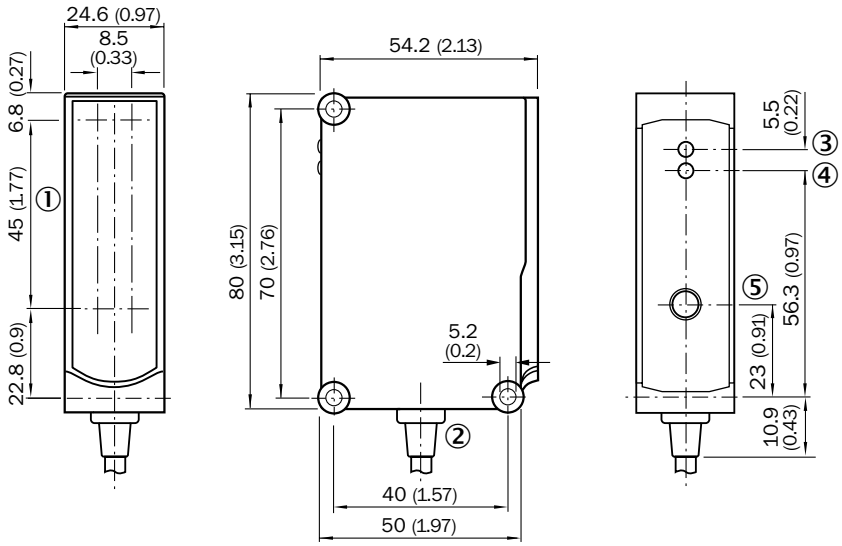

① Opening of light band
② Mounting hole ø 5.2 mm
③ Status indicator LED green: power on
④ Status indicator LED, yellow: Status of received light beam
⑤ Sensitivity setting; single teach button

Detection height: 50 mm, cable

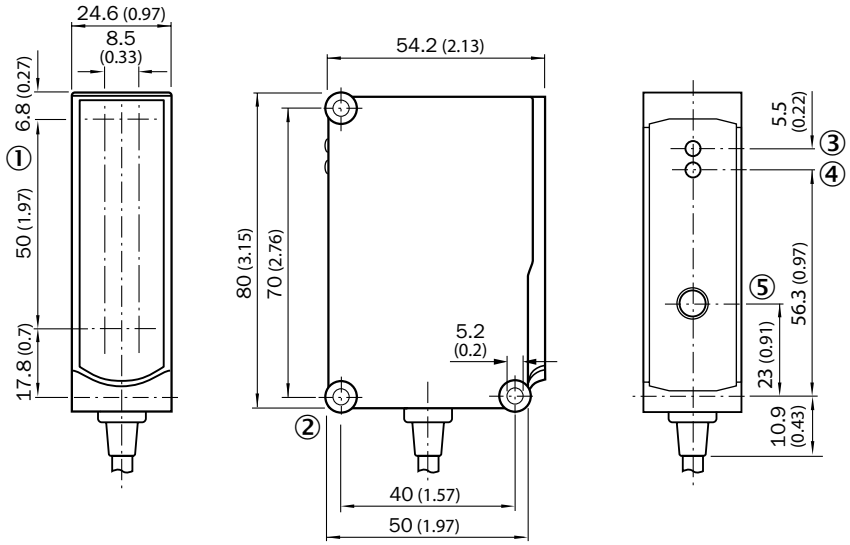

① Opening of light band
② Mounting hole ø 5.2 mm
③ Status indicator LED green: power on
④ Status indicator LED, yellow: Status of received light beam
⑤ Sensitivity setting; single teach button

Detection height: 50 mm, connector

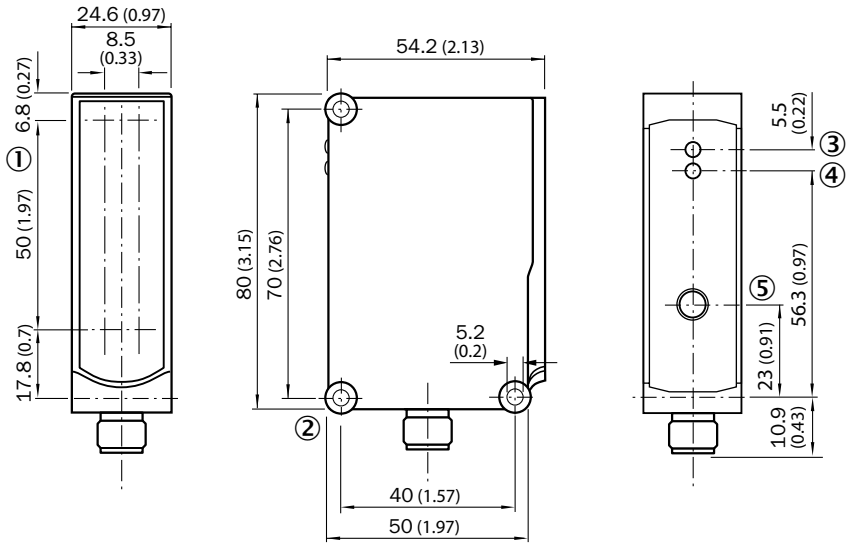

① Opening of light band
② Mounting hole ø 5.2 mm
③ Status indicator LED green: power on
④ Status indicator LED, yellow: Status of received light beam
⑤ Sensitivity setting; single teach button

Adjustments

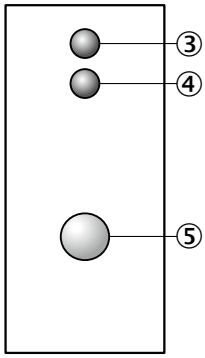

③ Status indicator LED green: power on
④ Status indicator LED, yellow: Status of received light beam
⑤ Sensitivity setting; single teach button

Connection diagram

Cd-083

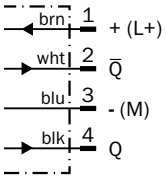

Cd-094

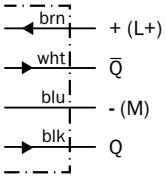

Recommended accessories

Mounting brackets/plates

Mounting brackets

Figure	Material	Description	Model name	Part no.
	Steel, zinc coated	Mounting bracket with hinged arm for W11-2, W27, Dx50	BEF-WN-MULTI	2064469
		Mounting bracket with hinged arm	BEF-WN-W27	2009122

Plug connectors and cables

Connecting cable (female connector-open)

- **Cable material:** PVC
- **Connector material:** TPU

Figure	Connection type head A	Connection type head B	Connecting cable	Enclosure rating	Model name	Part no.
	Female connector, M12, 4-pin, straight	Cable, open conductor heads	2 m, 4-wire	IP 67	DOL-1204-G02M	6009382
			10 m, 4-wire	IP 67	DOL-1204-G10M	6010543
	Female connector, M12, 4-pin, angled, with 3 LEDs	Cable, open conductor heads	2 m, 4-wire	IP 67	DOL-1204-L02M	6027945
			10 m, 4-wire	IP 67	DOL-1204-L10M	6027946
	Female connector, M12, 4-pin, angled	Cable, open conductor heads	2 m, 4-wire	IP 67	DOL-1204-W02M	6009383
			10 m, 4-wire	IP 67	DOL-1204-W10M	6010541

Female connector (ready to assemble)

Figure	Connection type head A	Connection type head B	Connector material	Enclosure rating	Model name	Part no.
	Female connector, M12, 4-pin, straight	Screw-type terminals	PBT	IP 67	DOS-1204-G	6007302
	Female connector, M12, 4-pin, angled	Screw-type terminals	PBT	IP 67	DOS-1204-W	6007303

E

Male connector (ready to assemble)

Figure	Connection type head A	Connection type head B	Connector material	Enclosure rating	Model name	Part no.
	Male connector, M12, 4-pin, straight	Screw-type terminals	PBT	IP 67	STE-1204-G	6009932
	Male connector, M12, 4-pin, angled	Screw-type terminals	PBT	IP 67	STE-1204-W	6022084

Universal bar clamp systems

Figure	Material	Description	Model name	Part no.
	Zinc plated steel (sheet), Diecast zinc (clamp)	Plate N04 for universal clamp bracket	BEF-KHS-N04	2051610
		Plate N07 with threat and screws (P250, PL40A)	BEF-KHS-N07	2051613

E

Device protection (mechanical)

Protective housing/tubes

Figure	Material	Description	Model name	Part no.
	Zinc plated steel (protective housing), Diecast zinc (clamp)	Protective housing for universal clamp	BEF-SG-W27	2039601

Reflectors

Angular

Figure	Material	Description	Model name	Part no.
	PMMA/ABS	Rectangular, screw connection, 47 mm x 47 mm	P250	5304812
		Rectangular, screw connection, 37 mm x 56 mm	PL40A	1012720
		Rectangular, screw connection, 80 mm x 80 mm	PL80A	1003865
		Rectangular, screw connection, 175 mm x 34 mm	PL180E01	1013289

→ **For additional accessories, please see page L-861**

E

E

One thing is clear – no reflector needed

Product description

Thanks to new technologies from SICK, TranspaTect MultiTask photoelectric sensors are now able to detect transparent and semitransparent trays and bottles without the need for reflectors, a frequent source of errors. In these applications, the reference surface is provided by a stable matte background. Sensitivity is taught in simply by pressing the teach-in button. Even high-gloss, reflective, or uneven surfaces can be detected reliably. Combined with AutoAdapt, SICK's function for continuous threshold adaptation, TranspaTect sensors provide a cost-effective and reliable detection solution in packaging processes in the food and beverage, and pharmaceuticals industries.

At a glance

- High-performance SICK technology
- No reflectors required
- Existing machine parts are used as reference target
- AutoAdapt for continuous threshold adaptation in contaminated conditions
- PinPoint LED with bright and precise light spot
- Easy-to-use teach-in button
- Status LEDs visible from all sides
- Rugged metal housing (PTFE coating available on request)

Your benefits

- Reliable detection of transparent and semitransparent objects without a reflector
- Reliable detection of objects regardless of color or surface qualities
- Freedom of machine design: no mounting system for the installation of a reflector required
- Quick commissioning: there is no need to mount a reflector or precisely adjust the sensor
- High operational safety: if the background becomes contaminated, object detection will continue uninterrupted
- Machine downtime is minimized: the integrated AutoAdapt function extends the time between cleanings
- Heightened productivity: mechanical and chemical ruggedness due to the metal housing

Additional information

→ **www.mysick.com/en/TranspaTect**
For more information, just enter the link or scan the QR code and get direct access to technical data, CAD design models, operating instructions, software, application examples and much more.

Detailed technical data

Features

Sensor principle	Photoelectric proximity sensor
Detection principle	Foreground suppression
Dimensions (W x H x D)	15.6 mm x 48.5 mm x 42 mm
Housing design (light emission)	Rectangular
Sensing range max. [1]	150 mm ... 700 mm (adjustment range background)
Sensing range [1]	0 mm ... 400 mm (detection range transparent objects) [2]
Type of light	Visible red light
Light source [3]	PinPoint LED
Light spot size (distance)	Ø 8 mm (300 mm)
Wave length	660 nm
Adjustment	Single teach-in button
Continuous threshold adaption	✔

[1] Referring to the background with 90 % remission (based on glass-bead blasted stainless steel, equivalent to standard white DIN 5033)
[2] 0 mm ... 550 mm detection range non-transparent objects.
[3] Average service life of 100,000 h at T_A = +25 °C.

E

Mechanics/electronics

Supply voltage [1]	10 V DC ... 30 V DC
Ripple [2]	≤ 5 V_{pp}
Power consumption [3]	≤ 55 mA
Output type	PNP/NPN (depending on type)
Output function	Complementary
Switching mode	Light/dark-switching
Signal voltage PNP HIGH/LOW	> Uv – 2,5 V / ca. 0 V
Signal voltage NPN HIGH/LOW	Approx. VS / < 2.5 V
Output current $I_{max.}$	100 mA
Response time [4]	2 ms
Switching frequency [5]	250 Hz
Connection type	Male connector, M12
Circuit protection	A [6], C [7], D [8]
Protection class	II
Weight	120 g
Enclosure rating	IP 66/IP 67
Ambient operating temperature	–40 °C ... +60 °C
Ambient storage temperature	–40 °C ... +75 °C

[1] Limit values, operation in short-circuit protected network max. 8 A.
[2] May not exceed or fall short of V_S tolerances.
[3] Without load.
[4] Signal transit time with resistive load.
[5] With light/dark ratio 1:1.
[6] A = V_S connections reverse-polarity protected.
[7] C = interference suppression.
[8] D = outputs overcurrent and short-circuit protected.

Ordering information

Other models available at www.mysick.com/en/TranspaTect

WTF12G-3, clear material detection

- **Switching mode:** light/dark-switching
- **Adjustment:** single teach-in button
- **Light spot size (distance):** Ø 8 mm (300 mm)

Sensing range max. [1]	Sensing range [1]	Output type	Connection	Connection diagram	Model name	Part no.
150 mm ... 700 mm [2]	0 mm ... 400 mm [3]	PNP	Connector M12, 4-pin	Cd-084	WTF12G-3P2432	1065719
	0 mm ... 550 mm [4]	NPN	Connector M12, 4-pin	Cd-084	WTF12G-3N2432	1066279

[1] Referring to the background with 90 % remission (based on glass-bead blasted stainless steel, equivalent to standard white DIN 5033)
[2] Adjustment range background
[3] Detection range transparent objects
[4] Detection range non-transparent objects

Dimensional drawings

Dimensions in mm (inch)

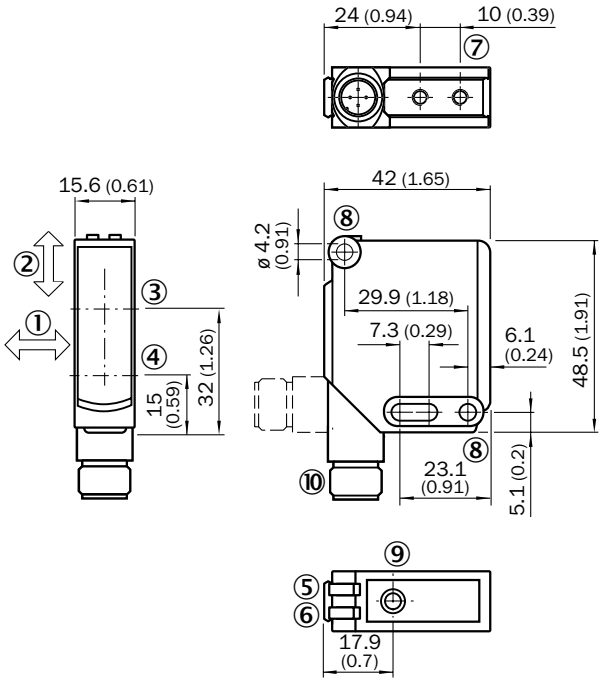

① Recommended installation for the detection of transparent trays
② Recommended installation for the detection of transparent bottles
③ Optical axis, receiver
④ Optical axis, sender
⑤ Status indicator LED green: power on
⑥ Status indicator LED, yellow: Status of received light beam
⑦ M4 threaded mounting hole, 4 mm deep
⑧ Mounting hole, Ø 4.2 mm
⑨ Adjustment sensing range: single teach button
⑩ Connection

Adjustments

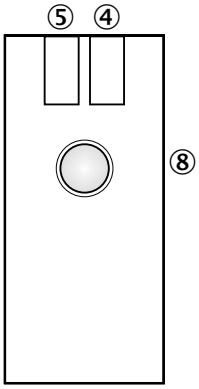

④ Status indicator LED green: power on
⑤ Status indicator LED, yellow: Status of received light beam
⑧ Adjustment sensing range: single teach button

Characteristic curves

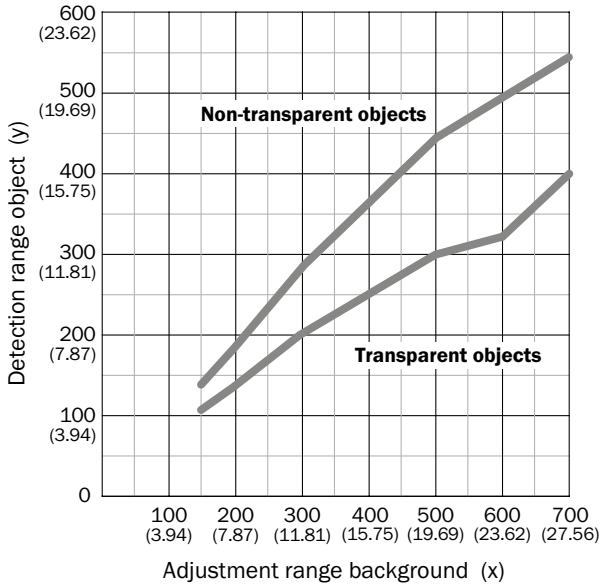

E

Legend:
x: Sensing range max. in mm (adjustment range background)
= Distance sensor / background
y: Sensing range in mm (detection range object)
= Maximum distance sensor / front edge of the object

Minimum distance sensor / background : 150 mm*

*) Referring to the background with 90 % remission equivalent to standard white DIN 5033 (i.e. glass-bead blasted stainless steel).
The use of a shiny background can increase the minimum distance to the background (i.e. brushed and pickled stainless steel, minimum distance sensor to background: 300 mm).

How to use this diagram:
Measure the distance from the sensor to the metal surface in the background.
This is the value for x (adjustment range background). If this is 500 mm for example,
the maximum distance between the sensor and the leading edge of a transparent object is 300 mm.

Connection diagram

Cd-084

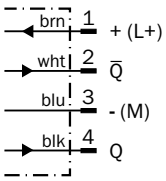

Recommended accessories

Mounting brackets/plates

Mounting brackets

Figure	Material	Description	Model name	Part no.
	Stainless steel	Mounting bracket, large	BEF-WG-W12	2013942
		Mounting bracket, small	BEF-WK-W12	2012938

Plug connectors and cables

Connecting cable (female connector-open)

- **Cable material:** PVC
- **Connector material:** TPU

Figure	Connection type head A	Connection type head B	Connecting cable	Enclosure rating	Model name	Part no.
	Female connector, M12, 4-pin, straight	Cable, open conductor heads	2 m, 4-wire	IP 67	DOL-1204-G02M	6009382
			5 m, 4-wire	IP 67	DOL-1204-G05M	6009866
	Female connector, M12, 4-pin, angled	Cable, open conductor heads	2 m, 4-wire	IP 67	DOL-1204-W02M	6009383
			5 m, 4-wire	IP 67	DOL-1204-W05M	6009867

E

Universal bar clamp systems

Figure	Material	Description	Model name	Part no.
	Zinc plated steel (sheet), Diecast zinc (clamp)	Plate N02 for universal clamp bracket	BEF-KHS-N02	2051608
		Plate N03 for universal clamp bracket	BEF-KHS-N03	2051609

Device protection (mechanical)

Protective housing/tubes

Figure	Material	Description	Model name	Part no.
	Zinc plated steel (protective housing), Diecast zinc (clamp)	Protective housing for universal clamp	BEF-SG-W12-3	2045175

Terminal and alignment brackets

Terminal brackets

Figure	Material	Description	Model name	Part no.
	Steel, zinc coated	Clamping block for dovetail mounting	BEF-KH-W12	2013285

→ **For additional accessories, please see page L-861**

E

Zero Pressure Accumulation made easy

E

Product description

Just as traffic lights handle the flow of cars in big cities, SICK ZoneControl solutions control product traffic on a conveyor without any other PLC or other external control. SICK ZoneControl is made up of three product families designed to control this traffic, known as Zero Pressure Accumulation (ZPA). Installation of ZoneControl solutions – via plug and play – is incredibly simple: daisy chain the ZoneControl products to one another, install the sensor, and connect the pneumatic line or connection to motor rollers.

No programming of a PLC, no laptop, and no expensive wiring is required. Each of these products creates one of two types of accumulation logic: Single Accumulation (with/without sleep) and Block (Slug) Accumulation, depending on what the application requires. To accomodate various mounting requirements, there are three different versions with different mounting configurations: between the rollers (R/IR), side frame mount (ZLM) and over the conveyor (WLR).

At a glance

- Three mounting versions: betweeen the rollers (IR/R), side frame mount (ZLM) and over the conveyor (WLR)
- Three types of logic: single accumulation, single accumulation with sleep, block (slug) accumulation
- Up to 50 ZoneControl solutions can be cascaded in one string
- Fully animated simulation to ease selection and implementation
- Standard zone lengths of 1m (3ft) or 2m (6 ft)

Your benefits

- Largest Zero Pressure Accumulation portfolio on the market gives users a wide variety of choices for their application
- SICK ZoneControl solutions control the flow of packages a on conveyor without a PLC or other external control.
- Quick setup since no programming, no laptop, and no PLC interfacing are required
- With 20 years of ZoneControl experience and personal support from SICK experts, all application and product issues are quickly addressed
- Quick expansion or modification of the conveyor due to the modular design

Additional information

→ **www.mysick.com/en/ZoneControl**
For more information, just enter the link or scan the QR code and get direct access to technical data, CAD design models, operating instructions, software, application examples and much more.

Detailed technical data

Features

	R DC	R AC/DC	IR DC
Sensor principle	Photoelectric proximity sensor		
Detection principle	Background suppression		
Actuator	–		Pneumatic, valve on board Pneumatic, valve supplied separately Electrical (depending on type)
Max. number of sensors	Approx. 30 [1]/Approx. 50 [2]		
Logical principle of operation	–		Single accumulation/single accumulation with sleep (depending on type)
Type of Release	–		Single release/block (slug) release/single release (depending on type)
Dimensions (W x H x D)	20.6 mm x 99.2 mm x 48.9 mm		50 mm x 147.4 mm x 48.9 mm 59.9 mm x 151.9 mm x 48.9 mm 20.6 mm x 99.2 mm x 48.9 mm (depending on type)
Housing design (light emission)	Fitting roller spacings		
Sensing range	60 mm ... 900 mm		
Type of light	Infrared light		
Light source [3]	LED		
Light spot size (distance)	Ø 20 mm (500 mm)		
Angle of dispersion	7°		
Adjustment	Potentiometer, 9 turns		
Time type	Switch on delay/time delay off (depending on type)	Time delay off/switch on delay (depending on type)	–
Delay time	0 s ... 5 s		–

[1] When powerd from the end of the IR daisy chain.
[2] When powerd from center of the IR daisy chain.
[3] Average service life of 100,000 h at T_A = +25 °C.

Mechanics/electronics

	R DC	R AC/DC	IR DC
Supply voltage [1]	10 V DC ... 30 V DC	≤ 250 V AC/DC	10 V DC ... 30 V DC
Ripple [2]	< 5 V_{pp}		
Power consumption [3]	< 20 mA	< 100 mA	< 20 mA
Output type	NPN, PNP	FET switch	Valve/PNP
Switching mode	Light switching Dark-switching Light/dark-switching [4] (depending on type)	Light switching Dark-switching (depending on type)	Dark-switching
Signal voltage PNP HIGH/LOW	Approx. V_S – 0.5 V / 0 V	–	Approx. V_S – 0.5 V / 0 V
Signal voltage NPN HIGH/LOW	Approx. VS / < 2.0 V		–
Output current $I_{max.}$	≤ 100 mA		
Response time	2 ms		
Switching frequency	± 250 Hz		

E

	R DC	R AC/DC	IR DC
Connection type	Male connector, M12 [5] Cable, 2 m [5] (depending on type)	Cable, 2 m [5]	Male connector, M12 [5]
Connection type for daisy chain	–		Cable with connector M12, 4-pin
Circuit protection	A [6], C [7], D [8]		
Protection class	III		
Weight	175 g	–	175 g
Housing material	ABS		
Enclosure rating	IP 67		IP 65
Shock/vibration	According to IEC 68		
Ambient operating temperature	–40 °C ... +60 °C (depending on type)	+10 °C ... +55 °C	–40 °C ... +60 °C (depending on type)
Ambient storage temperature	–40 °C ... +75 °C		

[1] Limit values.
[2] May not exceed or fall short of V_S tolerances.
[3] Without load and valve deenergized.
[4] Selectable via light/dark rotary switch.
[5] Do not bend below 0 °C.
[6] A = V_S connections reverse-polarity protected.
[7] C = interference suppression.
[8] D = outputs overcurrent and short-circuit protected.

E

Pneumatic

	R DC	R AC/DC	IR DC
Coil ratings			
Valve, metric	–		24 V DC 1 W
Valve, imperial	–		24 V DC 1 W
Medium for valves	–		Compressed air or neutral gases filtered, non-lubricated or lubricated
Design solenoid valve	–		3/2-way valve
Connection type solenoid valve			
Valve, metric	–		Compressed air 2 x 8 mm diameter, output line 4 mm diameter
Valve, imperial	–		Control line 1/4 " diameter, compressed air 2x 3/8 " diameter: output line 2 x 1/4 " diameter, compressed air 2x 3/8 " diameter (depending on type)
Without magnetic valve	–		Cable with 9.4 mm DIN valve connector
Air flow rate			
Valve, metric	–		Approx. 20 Nl/min
Valve, imperial	–		Approx. 1.4 SCFM
Ventilation capacity			
Valve, metric	–		Approx. 130 Nl/min
Valve, imperial	–		Approx. 1.4 SCFM
Operating pressure range			
Valve, metric	–		2 bar ... 8 bar
Valve, imperial	–		0 psi ... 65 psi

Ordering information

Other models available at www.mysick.com/en/ZoneControl

R DC

Switching mode	Output type	Time type	Connection	Connection diagram	Type	Part no.
Light switching	PNP, NPN	–	Connector M12, 4-pin	Cd-256	RT-B1221	1063174
			Cable, 4-wire, 2 m	Cd-251	RT-B1117	1063153
Dark-switching	PNP, NPN	–	Connector M12, 4-pin	Cd-261	RT-B2221	1063175
			Cable, 4-wire, 2 m	Cd-252	RT-B2117	1063178
Light/dark-switching	PNP	–	Cable, 4-wire, 2 m	Cd-249	RT-P3117	1063179
			Connector M12, 4-pin	Cd-255	RT-P3221	1063129
		Switch on delay	Connector M12, 4-pin	Cd-255	RTN-P3221	1063172
			Cable, 4-wire, 2 m	Cd-249	RTN-P3117	1063182
		Time delay off	Cable, 4-wire, 2 m	Cd-249	RTF-P3117	1063181
			Connector M12, 4-pin	Cd-255	RTF-P3221	1063171
	NPN	–	Connector M12, 4-pin	Cd-255	RT-N3221	1063162
			Cable, 4-wire, 2 m	Cd-249	RT-N3117	1063180
Light/dark-switching [1]	PNP	–	Connector M12, 4-pin	Cd-258	RTQ-P4221	1063173
			Cable, 4-wire, 2 m	Cd-250	RTQ-P4117	1063183
	PNP, NPN	–	Connector M12, 4-pin	Cd-256	RTQ-B1221	1063177
			Cable, 4-wire, 2 m	Cd-251	RTQ-B1117	1063184

[1] Selectable via light/dark rotary switch.

R AC/DC

Switching mode	Output type	Time type	Connection	Connection diagram	Type	Part no.
Light switching	FET switch	–	Cable, 4-wire, 2 m	Cd-247	RT-M1117	1063194
		Time delay off	Cable, 4-wire, 2 m	Cd-247	RTF-M1117	1063195
		Switch on delay	Cable, 4-wire, 2 m	Cd-247	RTN-M1117	1063196
Dark-switching		–	Cable, 4-wire, 2 m	Cd-248	RT-M2117	1063197
		Time delay off	Cable, 4-wire, 2 m	Cd-248	RTF-M2117	1063198
		Switch on delay	Cable, 4-wire, 2 m	Cd-248	RTN-M2117	1063199

IR DC Air to Drive (NC)

- **Actuator:** pneumatic, valve on board
- **Switching mode:** dark-switching
- **Output type:** valve
- **Connection:** Connector M12, 4-pin

Type of output	Connection type solenoid valve	Connection type for daisy chain	Connection diagram	Type	Part no.
Valve, metric	Compressed air 2 x 8 mm diameter, output line 4 mm diameter	Cable with connector M12, 4-pin 2 m	Cd-265	IRT-P212E40	1063108
Valve, imperial	Control line 1/4 " diameter, compressed air 2x 3/8 " diameter	Cable with connector M12, 4-pin 1.2 m	Cd-265	IRT-P211A10	1063117
		Cable with connector M12, 4-pin 2 m	Cd-265	IRT-P212A10	1063123

E

IR DC Air to Brake (NO)

- **Actuator:** pneumatic, valve on board
- **Switching mode:** dark-switching
- **Output type:** valve
- **Connection:** Connector M12, 4-pin

Type of output	Connection type solenoid valve	Connection type for daisy chain	Connection diagram	Type	Part no.
Valve, metric	Compressed air 2 x 8 mm diameter, output line 4 mm diameter	Cable with connector M12, 4-pin 1.2 m	Cd-265	IRT-P211E41	1063107
		Cable with connector M12, 4-pin 2 m	Cd-265	IRT-P212E41	1063109
Valve, imperial	Output line 2 x 1/4 " diameter, compressed air 2x 3/8 " diameter	Cable with connector M12, 4-pin 1.2 m	Cd-265	IRT-P211A11	1063118
	Control line 1/4 " diameter, compressed air 2x 3/8 " diameter	Cable with connector M12, 4-pin 2 m	Cd-265	IRT-P212A11	1063124

IR DC HIGH to Drive

- **Switching mode:** dark-switching
  Output type: valve / PNP
- **Connection:** connector M12, 4-pin

E

Type of output	Actuator	Connection type solenoid valve	Connection type for daisy chain	Connection diagram	Type	Part no.
Without magnetic valve	Pneumatic, valve supplied separately	Cable with 9.4 mm DIN valve connector	Cable with connector M12, 4-pin 1.2 m	Cd-265	IRT-P211C63	1063127
			Cable with connector M12, 4-pin 2 m	Cd-265	IRT-P212C63	1063116
For Motor Driven Rollers (MDR)	Electrical	–	Cable with connector M12, 4-pin 1.2 m	Cd-266	IRT-P231C83	1063101
			Cable with connector M12, 4-pin 2 m	Cd-266	IRT-P232C83	1063100

Dimensional drawings

Dimensions in mm (inch)

R / IR without valve

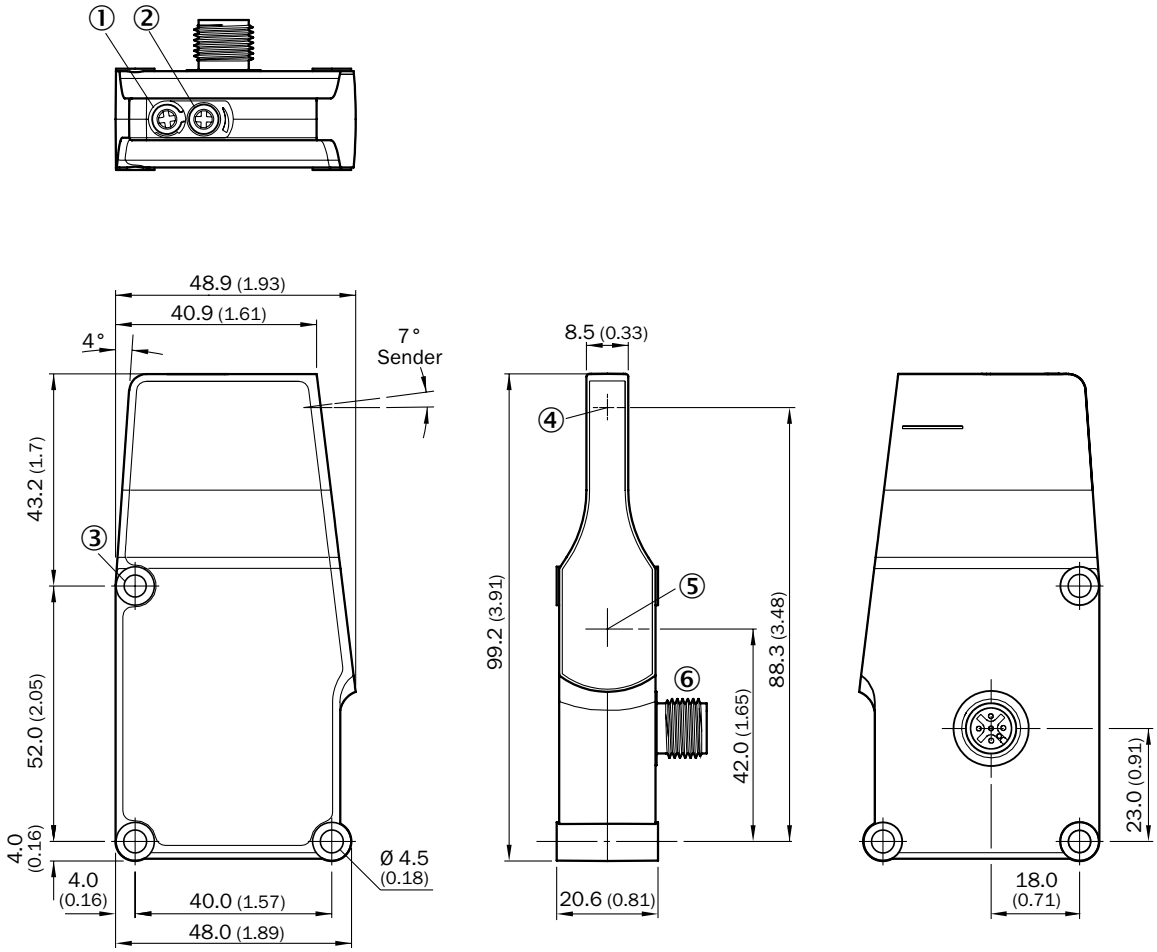

① LED
② Potentiometer
③ Mounting hole
④ Center of optical axis, sender
⑤ Center of optical axis, receiver
⑥ Connector M12, 4-pin

E

E

R cable

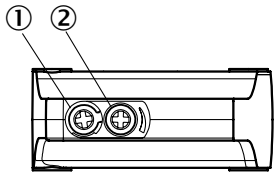

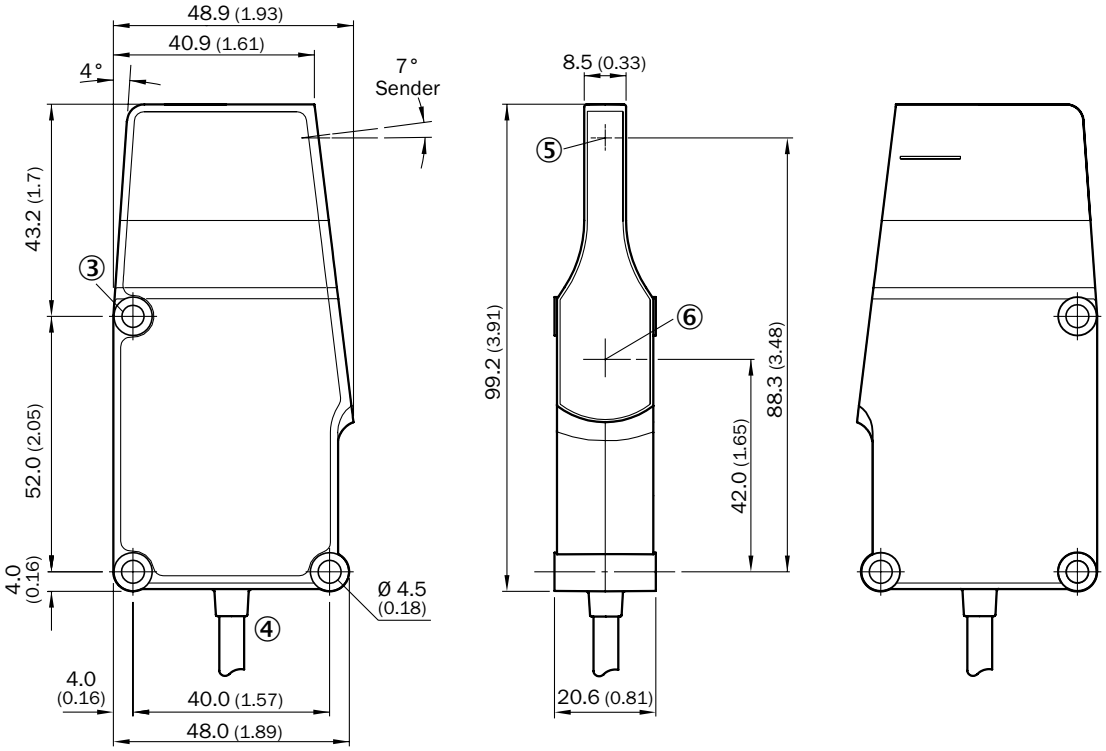

① LED
② Potentiometer
③ Mounting hole
④ Cable
⑤ Center of optical axis, sender
⑥ Center of optical axis, receiver

IR, valve metric/imperial

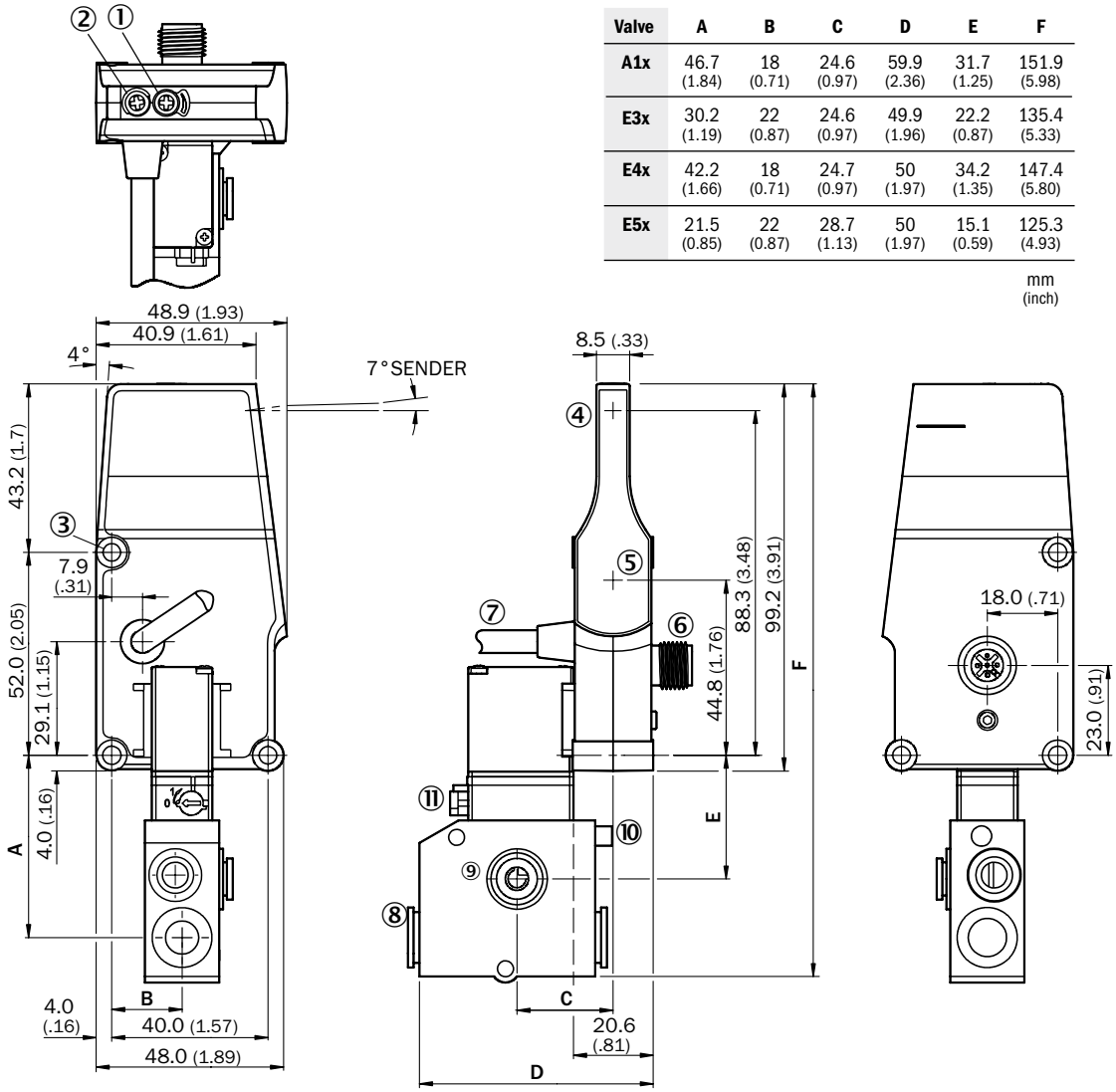

Valve	A	B	C	D	E	F
A1x	46.7 (1.84)	18 (0.71)	24.6 (0.97)	59.9 (2.36)	31.7 (1.25)	151.9 (5.98)
E3x	30.2 (1.19)	22 (0.87)	24.6 (0.97)	49.9 (1.96)	22.2 (0.87)	135.4 (5.33)
E4x	42.2 (1.66)	18 (0.71)	24.7 (0.97)	50 (1.97)	34.2 (1.35)	147.4 (5.80)
E5x	21.5 (0.85)	22 (0.87)	28.7 (1.13)	50 (1.97)	15.1 (0.59)	125.3 (4.93)

mm
(inch)

① Potentiometer
② LED
③ Mounting hole
④ Center of optical axis, sender
⑤ Center of optical axis, receiver
⑥ Connector M12, 4-pin
⑦ Daisy chain, cable with female connector

E

E

IR, for Motor Driven Rollers (MDR)

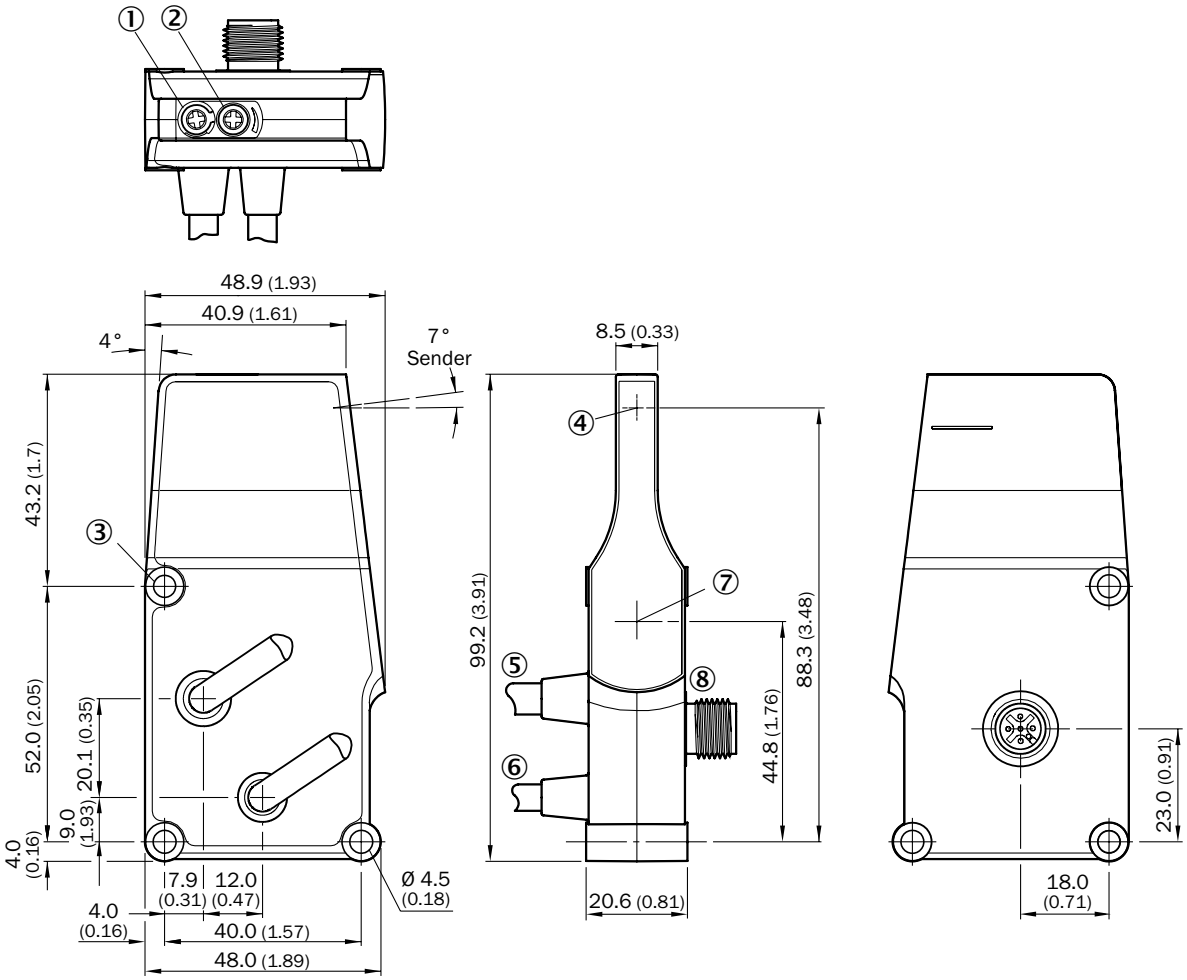

① LED
② Potentiometer
③ Mounting hole
④ Center of optical axis, sender
⑤ Daisy chain, cable with female connector
⑥ Connection for motor
⑦ Center of optical axis, receiver
⑧ Connector M12, 4-pin

Bar diagrams

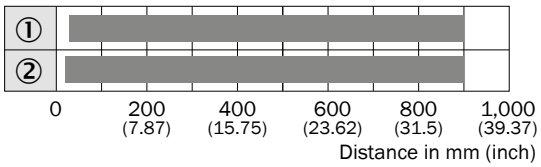

Sensing range max.

① Sensing range on black, 5 % remission
② Sensing range on white, 90 % remission

Connection diagram

Cd-247

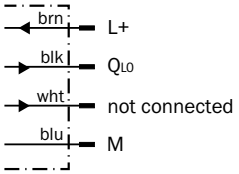

Cd-248

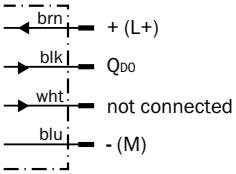

Cd-249

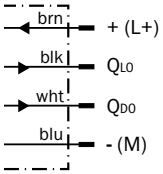

Cd-250

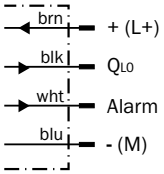

Cd-251

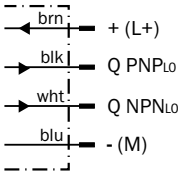

Cd-252

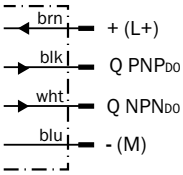

Cd-255

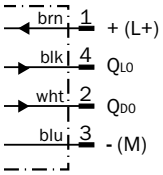

Cd-256

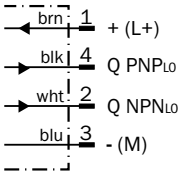

Cd-258

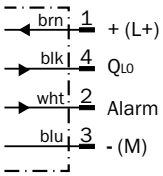

Cd-261

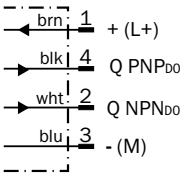

Cd-265

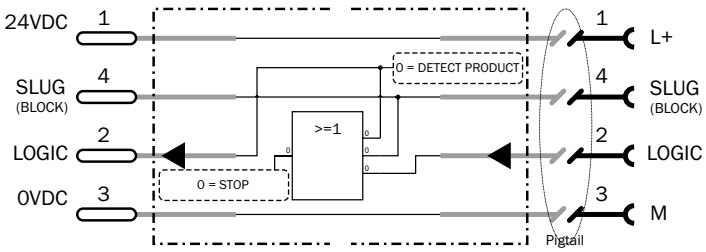

Cd-266

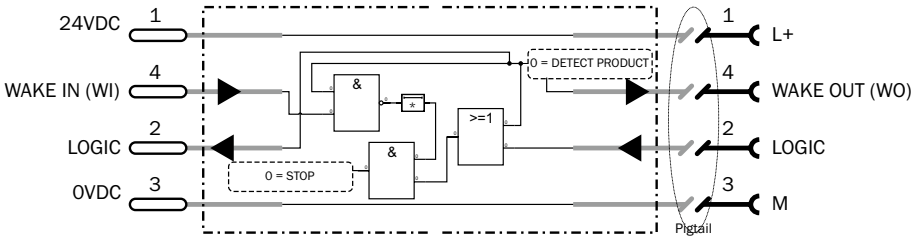

*After 9 s of no product, sensor goes into sleep.
Wake In input only active when sensor sleeping.

E

Recommended accessories

Adapters/distributors

T-junctions

Figure	Connecting cable	Connector material	Locking nut material	Description	Model name	Part no.
	0.3 m	TPU	CuZn, nickel-plated brass	Signal interrogation and logic interrupt	DSL-1104-T0M3	6011683
				Signal interrogation	DSL-1204-T0M4	6011682

Mounting brackets/plates

Mounting brackets

Figure	Material	Description	Model name	Part no.
	Steel, zinc coated	Mounting bracket	BEF-WK-WTR	2051786

→ **For additional accessories, please see page L-861**

E

E

Zero Pressure Accumulation made easy

E

Product description

Just as traffic lights handle the flow of cars in big cities, SICK ZoneControl solutions control product traffic on a conveyor without any other PLC or other external control. SICK ZoneControl is made up of three product families designed to control this traffic, known as Zero Pressure Accumulation (ZPA). Installation of ZoneControl solutions – via plug and play – is incredibly simple: daisy chain the ZoneControl products to one another, install the sensor, and connect the pneumatic line or connection to motor rollers.

No programming of a PLC, no laptop, and no expensive wiring is required. Each of these products creates one of two types of accumulation logic: Single Accumulation (with/without sleep) and Block (Slug) Accumulation, depending on what the application requires. To accomodate various mounting requirements, there are three different versions with different mounting configurations: between the rollers (R/IR), side frame mount (ZLM) and over the conveyor (WLR).

At a glance

- Connects to any 9.4 mm DIN valve
- Single or slug accumulation
- Ideal for pneumatic actuators or motor-driven rollers
- Daisy chain connection cables included for zone lengths of 1m (3 ft) and 2 m (6 ft)
- AC power options

Your benefits

- Attach your choice of actuator to complete the ZoneControl Solution
- Linear polarized retro-reflective sensing technology eliminates false detection of shiny or plastic-wrapped objects
- The Daisy Chain means that last minute changes or adding a zone is a matter of minutes
- A sealed IP67 housing to withstand harsh environments and washdown
- Single or Block (slug) Accumulation Logic to maximize product throughput
- Output cable for connection to electric motor control or pneumatic valve

Additional information

→ **www.mysick.com/en/WLR**

For more information, just enter the link or scan the QR code and get direct access to technical data, CAD design models, operating instructions, software, application examples and much more.

Detailed technical data

Features

	Single accumulation	Block (slug) accumulation
Sensor principle	Photoelectric retro-reflective sensor	
Logical principle of operation	Single accumulation	Block (slug) accumulation
Type of Release	Single release, block (slug) release	Block (slug) release
Dimensions (W x H x D)	45 mm x 73.7 mm x 48.6 mm	
Housing design (light emission)	Rectangular	
Sensing range [1]	0 m ... 9 m	
Type of light	Visible red light	
Light source [2]	LED	
Light spot size (distance)	Ø 205 mm (9 m)	

[1] PL80A.

[2] Average service life of 100,000 h at T_A = +25 °C.

Mechanics/electronics

Ripple [1]	< 5 V_{pp}
Power consumption [2]	≤ 40 mA
Switching mode	Light switching
Response time	1 ms
Switching frequency	500 Hz
Connection type	Cable with connector, M12, 300 mm
Connection type for daisy chain	Cable with receptacle, M12, 4-pin
Circuit protection	A [3], C [4], D [5]
Protection class	II
Housing material	ABS
Enclosure rating	IP 67
Shock/vibration	According to IEC 68
Ambient operating temperature	–25 °C ... +55 °C
Ambient storage temperature	–40 °C ... +70 °C

[1] Of V_S.

[2] Without load and valve deenergized.

[3] A = V_S connections reverse-polarity protected.

[4] C = interference suppression.

[5] D = outputs overcurrent and short-circuit protected.

Pneumatic

	Single accumulation	Block (slug) accumulation
Connection type solenoid valve	Spade, 1 m: spade, 2 m cable, 1 m, with 9.4 mm DIN valve connector cable, 2m, with 9.4 mm DIN valve connector (depending on type)	Cable, 1 m, with 9.4 mm DIN valve connector: cable, 2m, with 9.4 mm DIN valve connector (depending on type)

Ordering information

Other models available at www.mysick.com/en/WLR

Single accumulation

- **Switching mode:** light switching
- **Connection to sensor:** cable with connector M12, 4-pin 300 mm

Connection type for daisy chain	Connection type solenoid valve	Connection diagram	Model name	Part no.
Cable with receptacle, M12, 4-pin, 1 m	Spade, 1 m	Cd-246	WLR2100-D1311	7027185
	Cable, 1 m, with 9.4 mm DIN valve connector	Cd-246	WLR2100-D2311	7027808
Cable with receptacle, M12, 4-pin, 2 m	Spade, 2 m	Cd-246	WLR2100-D1312	7027753
	Cable, 2m, with 9.4 mm DIN valve connector	Cd-246	WLR2100-D2312	7027811

Block (slug) accumulation

- **Switching mode:** light switching
- **Connection to sensor:** cable with connector M12, 4-pin 300 mm

Connection type for daisy chain	Connection type solenoid valve	Connection diagram	Model name	Part no.
Cable with receptacle, M12, 4-pin, 1 m	Cable, 1 m, with 9.4 mm DIN valve connector	Cd-246	WLR2100-D1321	7027754
	Cable, 1 m, with 9.4 mm DIN valve connector	Cd-246	WLR2100-D2321	7027809
Cable with receptacle, M12, 4-pin, 2 m	Cable, 2m, with 9.4 mm DIN valve connector	Cd-246	WLR2100-D1322	7027755
	Cable, 2m, with 9.4 mm DIN valve connector	Cd-246	WLR2100-D2322	7027810

E

Dimensional drawings

Dimensions in mm (inch)

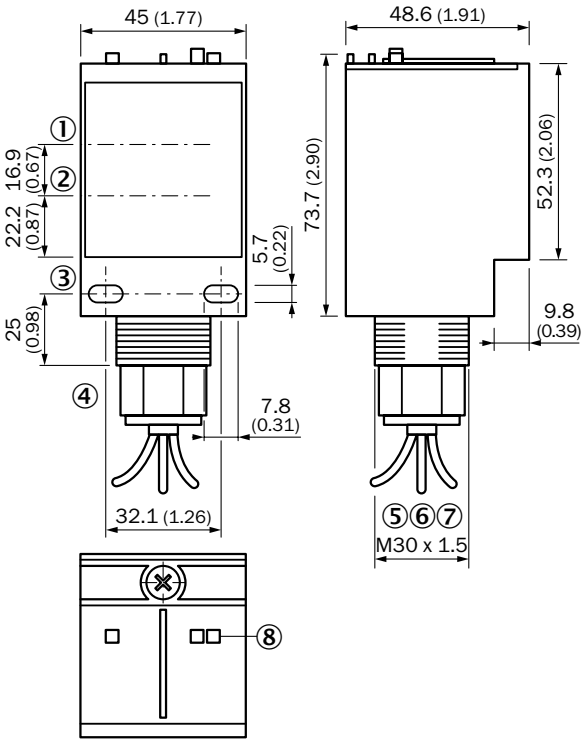

① Sender
② Receiver
③ Fastening threads
④ Threaded mounting hole
⑤ Daisy chain, cable with female connector
⑥ Cable
⑦ Daisy chain connector, male
⑧ Status indicator: LED

Connection diagram

Cd-246

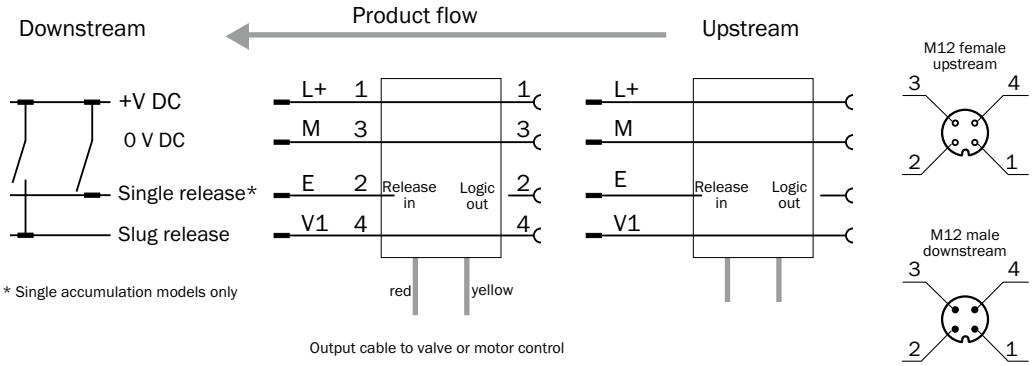

* Single accumulation models only

E

Side-mounted conveyor module with zone control intelligence

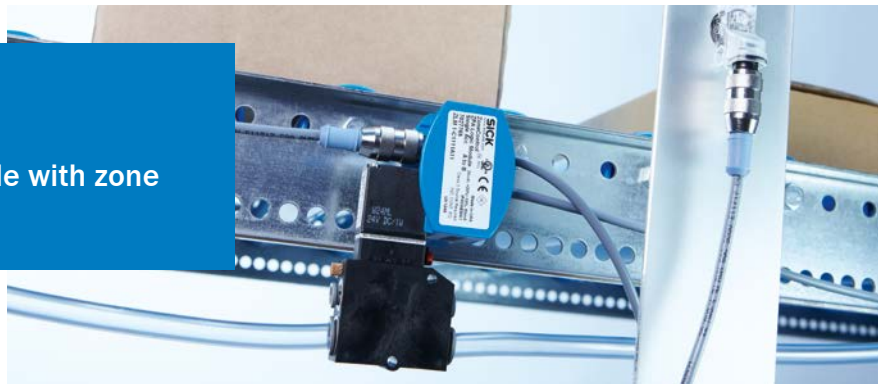

E

Product description

Just as traffic lights handle the flow of cars in big cities, SICK ZoneControl solutions control product traffic on a conveyor without any other PLC or other external control. SICK ZoneControl is made up of three product families designed to control this traffic, known as Zero Pressure Accumulation (ZPA). Installation of ZoneControl solutions – via plug and play – is incredibly simple: daisy chain the ZoneControl products to one another, install the sensor, and connect the pneumatic line or connection to motor rollers.

No programming of a PLC, no laptop, and no expensive wiring is required. Each of these products creates one of two types of accumulation logic: Single Accumulation (with/without sleep) and Block (Slug) Accumulation, depending on what the application requires. To accomodate various mounting requirements, there are three different versions with different mounting configurations: between the rollers (R/IR), side frame mount (ZLM) and over the conveyor (WLR).

At a glance

- Connects to any discrete DC voltage sensor
- Single or slug accumulation
- Ideal for pneumatic actuators
- Daisy chain connection cable included for zone lengths of 1m (3ft) or 2m (6 ft)
- Bolt-on or clip-on installation into the conveyor's side frame

Your benefits

- Sensor cable integrated for you to attach nearly any sensor
- SICK's most compact ZoneControl solution, you won't even know it's there
- Single or Block (slug) Accumulation Logic to maximize product throughput
- The Daisy Chain means that last minute changes or adding a zone is a matter of minutes

Additional information

→ **www.mysick.com/en/ZLM**

For more information, just enter the link or scan the QR code and get direct access to technical data, CAD design models, operating instructions, software, application examples and much more.

8015327/2014-02-08
Subject to change without notice

Detailed technical data

Features

	ZLM-B	ZLM-C
Actuator	Pneumatic, valve on board	
Max. number of sensors	Approx. 30 [1]/Approx. 50 [2]	
Logical principle of operation	Single accumulation / block (slug) accumulation (depending on type)	
Type of Release	Single release / block (slug) release / block (slug) release (depending on type)	
Dimensions (W x H x D)	31 mm x 110 mm x 83 mm 31 mm x 93 mm x 74 mm 31 mm x 105 mm x 74 mm (depending on type)	30 mm x 110 mm x 70 mm
Housing design (light emission)	Bolt-on mounting	Clip-on mounting
Time type	Time delay off	–
Delay time	0 s ... 2 s	–

[1] When powerd from the end of the IR daisy chain.
[2] When powerd from center of the IR daisy chain.

Mechanics/electronics

	ZLM-B	ZLM-C
Supply voltage	≥ 21.6 V DC [1]	≥ 21.6 V DC [2]
Ripple	< 5 V_{pp}	
Power consumption [3]	< 60 mA	
Output type	PNP	
Signal voltage PNP HIGH/LOW	Approx. V_S – 0.5 V / 0 V	
Output current $I_{max.}$	100 mA	
Response time	2.5 ms	
Switching frequency	200 Hz	
Connection type	Cable with receptacle [4]	
Connection type for daisy chain	Cable with connector M12, 4-pin / Cable with push-on connector M12, 4-pin (depending on type)	Cable with push-on connector M12, 4-pin / Cable with connector M12, 4-pin (depending on type)
Circuit protection	A [5], C [6], D [7]	
Protection class	III [8]	
Housing material	ABS	
Enclosure rating	IP 40	
Shock/vibration	According to IEC 68	
Ambient operating temperature	–10 °C ... +55 °C	
Ambient storage temperature	–40 °C ... +75 °C (depending on type)	–40 °C ... +75 °C
Mounting system type	Side-Frame-Mount	

[1] Limit values.
[2] Limit values, the device may connect only to protected extra low voltage.
[3] Without load and valve deenergized.
[4] Do not bend below 0 °C.
[5] A = V_S connections reverse-polarity protected.
[6] C = interference suppression.
[7] D = outputs overcurrent and short-circuit protected.
[8] Reference voltage: 50 V DC.

E

E

Pneumatic

	ZLM-B	ZLM-C
Coil ratings		
Valve, imperial	24 V DC 1 W	
Valve, metric	24 V DC 2 W 24 V DC 1 W (depending on type)	–
Medium for valves	Compressed air or neutral gases filtered, non-lubricated or lubricated	
Design solenoid valve [1]	3/2-way valve	
Connection type solenoid valve		
Valve, imperial	Compressed air 3/8 " diameter, control line 1/4 " diameter	
Valve, metric	Compressed air 2 x 8 mm diameter, output line 4 mm diameter	–
Air flow rate		
Valve, imperial	40 Nl/min	
Valve, metric [2]	Approx. 20 Nl/min	–
Ventilation capacity		
Valve, imperial	40 Nl/min	
Valve, metric	Approx. 100 Nl/min / approx. 130 Nl/min (depending on type)	–
Operating pressure range		
Valve, imperial	0 bar ... 4.5 bar	
Valve, metric	0.5 bar ... 8 bar [3] (depending on type)	–
Response time solenoid valve	Partially open 10 ms Open 23 ms Close 21 ms	

[1] Other valve types available on request.

[2] P – A.

[3] In combination with cylinders with small air volume we recommend tests.

Ordering information

Other models available at www.mysick.com/en/ZLM

Bolt-on mounting, Air to Drive (NC)

- **Connection diagram:** Cd-263

Type of output	Logical principle of operation	Ventilation capacity	Operating pressure range	Connection to sensor	Connection type for daisy chain	Model name	Part no.
Valve, imperial	Single accumulation	40 Nl/min	0 bar ... 4.5 bar	Cable with receptacle, M12, 4-pin 0.5 m	Cable with connector M12, 4-pin 1.2 m	ZLM1-B1111A10	7027768
					Cable with connector M12, 4-pin 2 m	ZLM1-B1211A10	7027784
				Cable with receptacle, M12 push-on, 4-pin 0.5 m	Cable with push-on connector M12, 4-pin 1.2 m	ZLM1-B1451A10	1052126
	Block (slug) accumulation	40 Nl/min	0 bar ... 4.5 bar	Cable with receptacle, M12, 4-pin 0.5 m	Cable with connector M12, 4-pin 1.2 m	ZLM1-B2111A10	7027770
					Cable with connector M12, 4-pin 2 m	ZLM1-B2211A10	7027786
Valve, metric	Single accumulation	Approx. 130 Nl/min	2 bar ... 8 bar [1]	Cable with receptacle, M12, 4-pin 1.1 m PVC	Cable with connector M12, 4-pin 1.2 m	ZLM1-B1612E42	7028842

[1] In combination with cylinders with small air volume we recommend tests.

Bolt-on mounting, Air to Brake (NO)

- **Connection diagram:** Cd-263

Type of output	Logical principle of operation	Ventilation capacity	Operating pressure range	Connection to sensor	Connection type for daisy chain	Model name	Part no.
Valve, imperial	Single accumulation	40 Nl/min	0 bar ... 4.5 bar	Cable with receptacle, M12, 4-pin 0.5 m	Cable with connector M12, 4-pin 1.2 m	ZLM1-B1111A11	7027769
					Cable with connector M12, 4-pin 2 m	ZLM1-B1211A11	7027785
	Block (slug) accumulation	40 Nl/min	0 bar ... 4.5 bar	Cable with receptacle, M12, 4-pin 0.5 m	Cable with connector M12, 4-pin 2 m	ZLM1-B2211A11	7027787
					Cable with connector M12, 4-pin 1.2 m	ZLM1-B2111A11	7027771
Valve, metric	Single accumulation	Approx. 100 Nl/min	0.5 bar ... 8 bar [1]	Cable with receptacle, M12, 4-pin 1.1 m PVC	Cable with connector M12, 4-pin	ZLM1-B5612E41	7028428
		Approx. 130 Nl/min	2 bar ... 8 bar [1]	Cable with receptacle, M12, 4-pin 1.1 m PVC	Cable with connector M12, 4-pin	ZLM1-B1612E43	7028843

[1] In combination with cylinders with small air volume we recommend tests.

Clip-on mounting, Air to Drive (NC)

- **Type of output:** valve, imperial
- **Ventilation capacity:** 40 Nl/min
- **Operating pressure range:** 0 bar ... 4.5 bar
- **Connection diagram:** Cd-263

Logical principle of operation	Connection to sensor	Connection type for daisy chain	Model name	Part no.
Single accumulation	Cable with receptacle, M12 push-on, 4-pin 0.5 m	Cable with push-on connector M12, 4-pin 1.2 m	ZLM1-C1451A10	7029987
	Cable with receptacle, M12, 4-pin 0.5 m	Cable with connector M12, 4-pin 1.2 m	ZLM1-C1111A10	7027764
		Cable with connector M12, 4-pin 2 m	ZLM1-C1211A10	7027780
Block (slug) accumulation	Cable with receptacle, M12, 4-pin 0.5 m	Cable with connector M12, 4-pin 2 m	ZLM1-C2211A10	7027782

Clip-on mounting, Air to Brake (NO)

- **Type of output:** valve, imperial
- **Ventilation capacity:** 40 Nl/min
- **Operating pressure range:** 0 bar ... 4.5 bar
- **Connection diagram:** Cd-263

Logical principle of operation	Connection to sensor	Connection type for daisy chain	Model name	Part no.
Single accumulation	Cable with receptacle, M12, 4-pin 0.5 m	Cable with connector M12, 4-pin 2 m	ZLM1-C1211A11	7027781
		Cable with connector M12, 4-pin 1.2 m	ZLM1-C1111A11	7027765
	Cable with receptacle, M12 push-on, 4-pin 0.5 m	Cable with push-on connector M12, 4-pin 1.2 m	ZLM1-C1451A11	7029988
Block (slug) accumulation	Cable with receptacle, M12, 4-pin 0.5 m	Cable with connector M12, 4-pin 1.2 m	ZLM1-C2111A11	7027767
		Cable with connector M12, 4-pin 2 m	ZLM1-C2211A11	7027783

Dimensional drawings

Dimensions in mm (inch)

ZLM-B

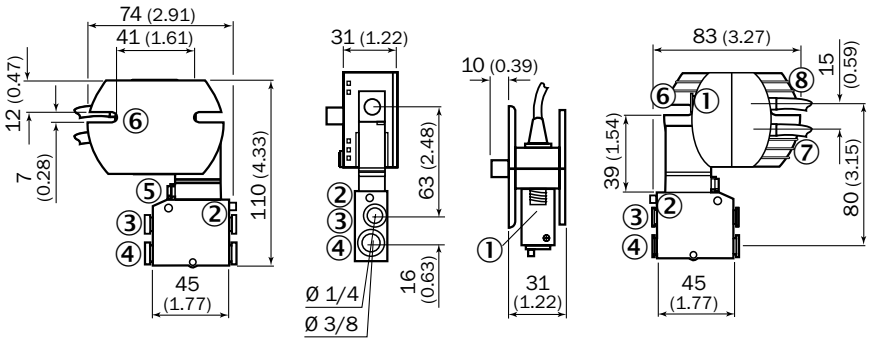

① Daisy chain connector, male
② Exhaust
③ Output port (x1)
④ Media connector (x2)
⑤ Manual override switch
⑦ Daisy chain connector, male or female
⑧ Sensor connection cable, female
⑨ Mounting stud
⑩ Anti-rotation stud
⑪ Mounting clip

ZLM-C

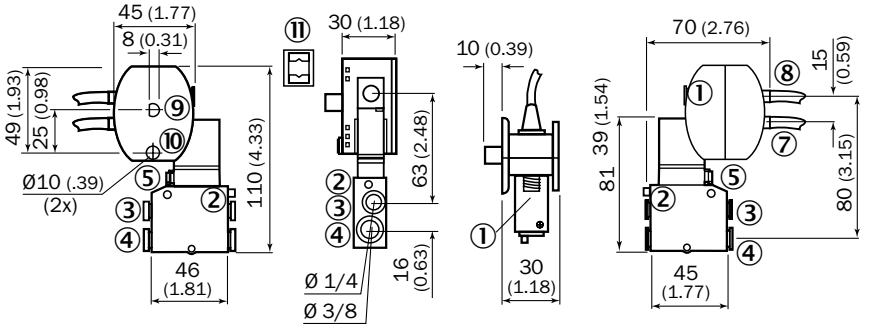

① Daisy chain connector, male
② Exhaust
③ Output port (x1)
④ Media connector (x2)
⑤ Manual override switch
⑥ Mounting slots (x2)
⑦ Daisy chain connector, male or female

E

Connection diagram

Cd-263

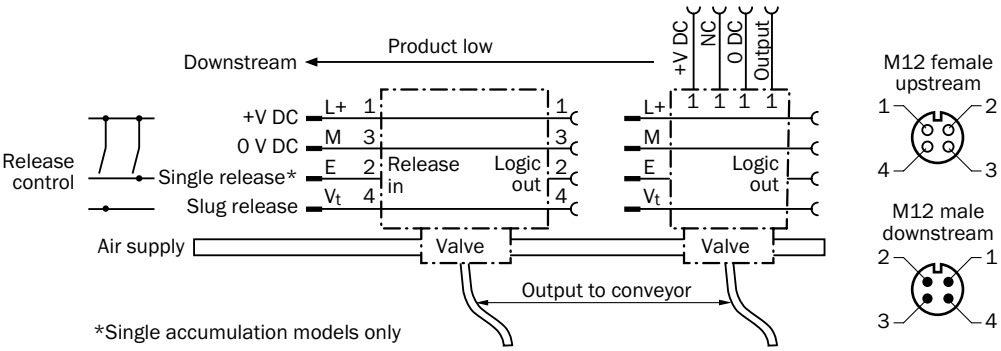

E

F

Best-in-class – minimum size for the toughest requirements

Providing maximum performance in minimum space requirements is no problem for SICK's miniature sensor technology. Tiny machines, intricate and complicated systems, the toughest ambient conditions, and targets of any kind – SICK can provide the solution for a combination of requirements. The latest PinPoint LEDs, SIRIC® and IO-Link technologies are packed into rugged, ultra compact housings and supplemented with practical accessories. These sensors are ideal for nearly all applications and installation conditions.

Your benefits

- The widest range in automation technology – we stock miniature photoelectric sensors for all requirements
- We meet the needs of all industries – from the world's smallest background suppression sensor to the most rugged stainless steel sensor for extreme applications in the food and beverage industry
- Virtually our entire miniature line comes with PinPoint technology, enabling the fast and safe alignment of photoelectric sensors. Even jet-black objects like car tires, textiles and carpets are reliably detected
- Flexible operation every time, whether preset at the factory, via a potentiometer, teach-in button or external teach via cable and IO-Link

8015327/2014-02-08

F

Miniature photoelectric sensors

Overview of miniature photoelectric sensors

F

	Housing properties							Sensor properties										
	Material			Enclosure rating														
	Stainless steel	Plastic	PTFE coating	IP 66	IP 67	IP 68	IP 69K	Photoelectric proximity sensor	Energetic	Background suppression	Foreground suppression	Photoelectric retro-reflective sensor	Autocollimation	Standard optics	Through-beam photoelectric sensor	IO-Link	AutoAdapt	Switching frequency ≥ 2 kHz
G2S																		
G2S NEW		■			■			■		■		■		■	■			
G6																		
G6		■			■			■	■	■		■		■	■			
W2																		
W2 Flat		■			■			■	■						■			
W2S-2 NEW		■			■			■		■		■	■		■	■		
W2SG-2 NEW		■			■							■	■			■	■	
W4																		
W4-3		■		■	■			■		■		■		■	■			
W4-3 PTFE		■	■			■	■	■		■					■			
W4-3 Glass		■		■	■							■		■			■	
W4S-3		■		■	■			■		■		■	■		■	■		
W4S-3 Glass		■		■	■							■	■			■	■	
W4SL-3 NEW		■		■	■			■		■		■	■		■	■		
W4SLG-3 NEW		■		■	■							■	■				■	
W4 Inox																		
W4S-3 Inox	■			■	■	■	■	■		■	■	■	■		■			
W4S-3 Inox Glass	■			■	■	■	■					■	■				■	
W4S-3 Inox Hygiene	■			■	■	■	■	■		■	■	■	■		■			
W4S-3 Inox Hyg. Glass	■			■	■	■	■					■	■				■	
W4SL-3V NEW	■			■	■	■	■	■		■					■			
W4SLG-3V NEW	■			■	■	■	■					■	■			■		
W4SL-3H NEW	■			■	■	■	■	■		■								
W4SLG-3H NEW	■			■	■	■	■					■	■			■		

	Optical properties								Special applications								Page
	Type of light/Light sender				Light spot geom-etry	Technology											
	LED infrared light	LED red light	★ Red laser light	★ PinPoint LED red light	★ Line-shaped light spot	★ Focused optics	SIRIC®	★ V-optics	Hygienic and washdown zones	Detecting transparent objects	Detecting perforated objects	Detecting small objects	Detecting uneven, shiny objects	Detecting objects wrapped in film	Detecting objects with position tolerances	Detecting high-speed objects	
		■		■		■						■					F-186
		■		■						■							F-196
		■				■											F-208
		■		■	■	■	■	■			■	■	■	■	■		F-216
		■		■			■			■							F-232
	■	■		■	■		■	■			■	■	■	■	■		F-238
		■		■			■		■								F-250
		■		■			■			■							F-254
		■		■			■										F-260
		■		■			■			■							F-272
			■				■					■					F-278
			■				■			■		■					F-290
		■		■			■		■	■							F-298
		■		■			■		■	■							F-312
		■		■			■		■								F-320
		■		■			■		■	■							F-334
			■				■		■			■					F-342
			■				■		■	■		■					F-350
			■				■		■			■					F-358
			■				■		■	■		■					F-364

F

F

	Housing properties							Sensor properties										
	Material			Enclosure rating														
	Stainless steel	Plastic	PTFE coating	IP 66	IP 67	IP 68	IP 69K	Photoelectric proximity sensor	Energetic	Background suppression	Foreground suppression	Photoelectric retro-reflective sensor	Autocollimation	Standard optics	Through-beam photoelectric sensor	IO-Link	AutoAdapt	Switching frequency ≥ 2 kHz
W8																		
W8		■			■			■		■		■	■					■
W8G		■			■							■	■					
W8 Inox	■						■	■	■	■		■		■	■			
W8 Laser		■			■			■		■								■
W100																		
W100-2 NEW		■			■			■	■	■		■		■	■			
W100 Laser		■						■	■			■		■	■			■

	Optical properties								Special applications								Page
	Type of light/Light sender				Light spot geom-etry	Technology											
	LED infrared light	LED red light	★ Red laser light	★ PinPoint LED red light	★ Line-shaped light spot	★ Focused optics	SIRIC®	★ V-optics	Hygienic and washdown zones	Detecting transparent objects	Detecting perforated objects	Detecting small objects	Detecting uneven, shiny objects	Detecting objects wrapped in film	Detecting objects with position tolerances	Detecting high-speed objects	
		■														■	F-372
		■								■							F-380
		■							■								F-386
			■									■				■	F-398
		■								■							F-404
			■									■				■	F-412

F

Photoelectric proximity sensors

	Maximum sensing range	Dimensions (W x H x D)	Page
W2 Flat	1 mm ... 115 mm	12 mm x 20 mm x 3.5 mm	F-208
G2S	1 mm ... 120 mm	7.7 mm x 27.5 mm x 13.5 mm	F-186
W4-3 PTFE	4 mm ... 120 mm	22 mm x 42 mm x 21.8 mm	F-250
W2S-2	1 mm ... 150 mm	7.7 mm x 21.8 mm x 13.5 mm	F-216
W4-3	3 mm ... 150 mm	16 mm x 39.5 mm x 12 mm	F-238
W4S-3	4 mm ... 180 mm	12.2 mm x 41.8 mm x 17.3 mm	F-260
G6	5 mm ... 300 mm	12 mm x 31.5 mm x 21 mm	F-196
W8	5 mm ... 300 mm	11 mm x 31 mm x 20 mm	F-372
W8 Laser	5 mm ... 300 mm	11 mm x 31 mm x 20 mm	F-398
W4SL-3	25 mm ... 300 mm	12.2 mm x 41.8 mm x 17.3 mm	F-278
W4SL-3H	25 mm ... 300 mm	15.3 mm x 63.2 mm x 22.2 mm	F-358
W4SL-3V	25 mm ... 300 mm	15.3 mm x 55.4 mm x 22.2 mm	F-342
W100 Laser	0 mm ... 450 mm	11 mm x 31 mm x 20 mm	F-412
W4S-3 Inox	4 mm ... 500 mm	15.3 mm x 55.4 mm x 22.2 mm	F-298
W4S-3 Inox Hygiene	4 mm ... 500 mm	15.3 mm x 63.2 mm x 22.15 mm	F-320
W8 Inox	0 mm ... 950 mm	11 mm x 21 mm x 33.3 mm	F-386
W100-2	0 mm ... 1,000 mm	11 mm x 31 mm x 20 mm	F-404

F

Photoelectric retro-reflective sensors

	Maximum sensing range	Dimensions (W x H x D)	Page
W2S-2	0 m ... 1.2 m	7.7 mm x 21.8 mm x 13.5 mm	F-216
W2SG-2	0 m ... 1.2 m	7.7 mm x 21.8 mm x 13.5 mm	F-232
G2S	0.02 m ... 3 m	7.7 mm x 21.8 mm x 13.5 mm	F-186
W8G	0 m ... 3 m	11 mm x 31 mm x 20 mm	F-380
W8	0 m ... 4 m	11 mm x 31 mm x 20 mm	F-372
W4-3	0.01 m ... 4.5 m	16 mm x 39.5 mm x 12 mm	F-238
W4-3 Glass	0.01 m ... 4.5 m	16 mm x 39.5 mm x 12 mm	F-254
W4SLG-3	0 m ... 4.5 m	12.2 mm x 41.8 mm x 17.3 mm	F-290
W4SLG-3H	0 m ... 4.5 m	15.3 mm x 63.2 mm x 22.2 mm	F-364
W4SLG-3V	0 m ... 4.5 m	15.3 mm x 55.4 mm x 22.2 mm	F-350
W4S-3	0 m ... 5 m	12.2 mm x 41.8 mm x 17.3 mm	F-260
W4S-3 Glass	0.01 m ... 5 m	12.2 mm x 41.8 mm x 17.3 mm	F-272
W4S-3 Inox	0 m ... 5 m	15.3 mm x 55.4 mm x 22.2 mm	F-298
W4S-3 Inox Glass	0 m ... 5 m	15.3 mm x 55.4 mm x 22.2 mm	F-312
W4S-3 Inox Hygiene	0 m ... 5 m	15.3 mm x 63.2 mm x 22.15 mm	F-320
W4S-3 Inox Hygiene Glass	0 m ... 5 m	15.3 mm x 63.2 mm x 22.15 mm	F-334
G6	0 m ... 6 m	12 mm x 31.5 mm x 21 mm	F-196
W8 Inox	0.01 m ... 6.5 m	11 mm x 21 mm x 33.3 mm	F-386
W100-2	0.01 m ... 7.5 m	11 mm x 31 mm x 20 mm	F-404
W4SL-3	0 m ... 12 m	12.2 mm x 41.8 mm x 17.3 mm	F-278
W100 Laser	0.08 m ... 12 m	11 mm x 31 mm x 20 mm	F-412

Through-beam photoelectric sensors

	Maximum sensing range	Dimensions (W x H x D)	Page
W2 Flat	0 m ... 0.5 m	12 mm x 20 mm x 3.5 mm	F-208
G2S	0 m ... 2 m	7.7 mm x 21.8 mm x 13.5 mm	F-186
W2S-2	0 m ... 2.5 m	7.7 mm x 21.8 mm x 13.5 mm	F-216
W4-3 PTFE	0 m ... 3 m	22 mm x 42 mm x 21.8 mm	F-250
W4-3	0 m ... 4 m	16 mm x 39.5 mm x 12 mm	F-238
W4S-3	0 m ... 5 m	12.2 mm x 41.8 mm x 17.3 mm	F-260
W4S-3 Inox	0 m ... 5 m	15.3 mm x 55.4 mm x 22.2 mm	F-298
W4S-3 Inox Hygiene	0 m ... 5 m	15.3 mm x 63.2 mm x 22.15 mm	F-320
G6	0 m ... 15 m	12 mm x 31.5 mm x 21 mm	F-196
W100-2	0 m ... 30 m	11 mm x 31 mm x 20 mm	F-404
W100 Laser	0 m ... 35 m	11 mm x 31 mm x 20 mm	F-412
W8 Inox	0 m ... 45 m	11 mm x 21 mm x 33.3 mm	F-386
W4SL-3	0 m ... 60 m	12.2 mm x 41.8 mm x 17.3 mm	F-278
W4SL-3V	0 m ... 60 m	15.3 mm x 55.4 mm x 22.2 mm	F-342

Product family overview

	G2S	G6	W2 Flat
			
	No space is too small	Beyond the standard: Global sensor – the economic way to business class performance	One of the smallest photoelectric sensor families in the world
Technical data overview			
Dimensions (W x H x D)	7.7 mm x 21.8 mm x 13.5 mm 7.7 mm x 27.5 mm x 13.5 mm	12 mm x 31.5 mm x 21 mm	12 mm x 20 mm x 3.5 mm
Sensing range max.			
Photoelectric proximity sensor	1 mm ... 120 mm	5 mm ... 300 mm	1 mm ... 115 mm
Photoelectric retro-reflective sensor	0.02 m ... 3 m	≤ 6 m	–
Through-beam photoelectric sensor	0 m ... 2 m	0 m ... 15 m	0 m ... 0.5 m
Light source	PinPoint LED	PinPoint LED	LED
Type of light	Visible red light	Visible red light	Visible red light
Enclosure rating	IP 67	IP 67	IP 67
Housing material	Plastic	Plastic	Plastic
At a glance			
	• Complete product family of photoelectric sensors in a tried-and-tested sensor design • Adjustable BGS photoelectric proximity sensor with an sensing range up to 120 mm • Optical performance data that exceeds market standards for sensing range and housing design • Reliable detection of jet-black, poorly reflective and highly reflective objects • PinPoint LED ensures high sensing ranges and reliable object detection	• PinPoint LED for a bright, precise light spot • Durable metal threaded inserts • SICK ASIC technology – the result of decades of experience in photoelectric sensors • Large, user-friendly potentiometer • Large, bright indicator LEDs • IP 67 enclosure rating	• One of the smallest photoelectric sensors in the world • No external amplifier required • Variant designed to detect transparent and glossy objects • Rugged housing with metal-reinforced fixing holes
Detailed information	➜ F-186	➜ F-196	➜ F-208

F

	W2S-2	W2SG-2	W4-3	W4-3 PTFE
				
	Incredibly small, yet powerful	Powerful clear material detection in an ultra-compact housing	Best-in-class sensing performance in a miniature housing	Teflon-coated photoelectric sensors withstand the harshest environments
	7.7 mm x 21.8 mm x 13.5 mm	7.7 mm x 21.8 mm x 13.5 mm	16 mm x 39.5 mm x 12 mm	22 mm x 42 mm x 21.8 mm
	1 mm ... 150 mm	–	3 mm ... 150 mm	4 mm ... 120 mm
	0 m ... 1.2 m	0 m ... 1.2 m	0.01 m ... 4.5 m	–
	0 m ... 2.5 m	–	0 m ... 4 m	0 m ... 3 m
	PinPoint LED	PinPoint LED	PinPoint LED	PinPoint LED
	Visible red light	Visible red light	Visible red light / Infrared light	Visible red light
	IP 67	IP 67	IP 66, IP 67	IP 68, IP 69K
	Plastic	Plastic	Plastic	PTFE
	• All variants with M8, 3- and 4-pin pigtail • Proximity sensor with precise background suppression and fixed focusing • IP 67 enclosure rating • Two sensing ranges with either a 15 mm or a 30 mm range are available	• All variants with M8, 3- and 4-pin pigtail • Proximity sensor with precise background suppression and fixed focusing • IP 67 enclosure rating • Two sensing ranges with either a 15 mm or a 30 mm range are available	• Best-in-class background suppression, reliable detection of critical objects and a high immunity to ambient light • Quick and easy setup using a precise 5-turn potentiometer, control wire or teach function • Best background suppression in its class • PinPoint LED for brightest light spot in its class	• Sensor and cable have a rugged Teflon coating for use in the most aggressive environments • Suitable for use in the food and beverage industry • Sensing range adjustment via teach wire • Background suppression and through-beam types available
	➜ F-216	➜ F-232	➜ F-238	➜ F-250

F

Product family overview

	W4-3 Glass	W4S-3	W4S-3 Glass
			
	Reliable detection of transparent objects	Photoelectric sensor family with best-in-class performance	Slim photoelectric sensors reliably detect transparent objects
Technical data overview			
Dimensions (W x H x D)	16 mm x 39.5 mm x 12 mm	12.2 mm x 41.8 mm x 17.3 mm	12.2 mm x 41.8 mm x 17.3 mm
Housing design	–	–	–
Sensing range max.			
Photoelectric proximity sensor	–	4 mm ... 180 mm	–
Photoelectric retro-reflective sensor	0.01 m ... 4.5 m	0 m ... 5 m	0.01 m ... 5 m
Through-beam photoelectric sensor	–	0 m ... 5 m	–
Light source	PinPoint LED	PinPoint LED	PinPoint LED
Type of light	Visible red light	Visible red light	Visible red light
Enclosure rating	IP 66, IP 67	IP 66, IP 67	IP 66, IP 67
Housing material	Plastic	Plastic	Plastic
At a glance			
	• Fast and reliable setup via teach-in pushbutton • Continuous threshold adaptation (AutoAdapt) technology to detect objects in changing conditions such as temperature, contamination and reflector wear • Versions without polarizing filters to better detect depolarizing objects such as PET bottles, CD sleeves and shrink-wrapped, glossy objects	• Best background suppression sensor in its class • Universal use of PinPoint LED technology in all models • BGS proximity sensor with laser-like light spot for precise detection tasks • Reliable setting via 5-turn potentiometer, teach-in pushbutton, teach-in via cable or IO-Link • Flexible sensor settings, monitoring, advanced diagnostics, and visualization thanks to IO-Link	• Continuous threshold adaption (AutoAdapt) of the switching threshold compensates for environmental changes • Single-lens autocollimation optics • Simple setting either via teach-in pushbutton, cable or IO-Link • PinPoint LED technology with a small, highly visible, well-defined light spot enables high reserve levels when using small reflectors • Flexible sensor settings, monitoring, advanced diagnostics, and visualization thanks to IO-Link
Detailed information	➜ F-254	➜ F-260	➜ F-272

F

	W4SL-3	W4SLG-3	W4S-3 Inox	W4S-3 Inox Glass
				
	Laser precision for very small or transparent objects	Detect all objects with one device – Change mode via teach button	Highest reliability, maximum resistance and endless possibilities	Reliable detection of transparent objects
	12.2 mm x 41.8 mm x 17.3 mm	12.2 mm x 41.8 mm x 17.3 mm	15.3 mm x 55.4 mm x 22.2 mm	15.3 mm x 55.4 mm x 22.2 mm
	–	–	Washdown	Washdown
	25 mm ... 300 mm	–	4 mm ... 500 mm	–
	0 m ... 12 m	0 m ... 4.5 m	0 m ... 5 m	0 m ... 5 m
	0 m ... 60 m	–	0 m ... 5 m	–
	Laser	Laser	PinPoint LED	PinPoint LED
	Visible red light	Visible red light	Visible red light	Visible red light
	IP 66, IP 67	IP 66, IP 67	IP 66, IP 67, IP 68, IP 69K	IP 66, IP 67, IP 68, IP 69K
	Plastic	Plastic	Stainless steel	Stainless steel
	• Precise laser light spot, laser class 1 • Teach-in pushbutton can be switched between detection of transparent and non-transparent objects • Sensing ranges between 25 mm and 60 m • Latest SIRIC® and laser technologies with second emitter LED to provide outstanding background suppression and ambient light immunity • Choice of adjustment via teach-in button, potentiometer, cable, or IO-Link	• Precise laser light spot, laser class 1 • Teach-in button can be switched between detection of transparent and smallest non-transparent objects • Continuous threshold adaptation (AutoAdapt) provides automatic adjustment to changes in light conditions • Sensing ranges up to 4.5 m • Autocollimation optics prevent blind spots • Choice of adjustment via teach-in button, potentiometer, cable, or IO-Link	• WashDown rated for fluid tightness (IP 66, IP 67, IP 68 and IP 69K) and Ecolab certified • Tough stainless steel housing (316L/1.4404) • Resistant to a variety of common cleaning and disinfection agents • Highly visible laser-like light spot due to PinPoint LED • Teach-in via stainless steel pushbutton with a metal membrane	• IP 66, IP 67, IP 68 and IP 69K enclosure rating and Ecolab certified • Tough stainless steel housing (316L/1.4404) • Resistant to a variety of common cleaning and disinfection agents • Modern electrical connection available – M12 connector with pin casting • PinPoint LED technology provides a highly visible laser-like light spot • Teach-in via stainless steel pushbutton with a metal membrane • Continuous threshold adaptation (AutoAdapt) technology reliably detects objects in changing conditions
	➜ F-278	➜ F-290	➜ F-298	➜ F-312

F

Product family overview

			
	W4S-3 Inox Hygiene	**W4S-3 Inox Hygiene Glass**	**W4SL-3V**
	Highest reliability, maximum resistance and endless possibilities	Reliable detection of transparent objects	The new standard for optical and mechanical ruggedness
Technical data overview			
Dimensions (W x H x D)	15.25 mm x 63.2 mm x 22.15 mm	15.25 mm x 63.2 mm x 22.15 mm	15.3 mm x 55.4 mm x 22.2 mm
Housing design	Hygiene	Hygiene	Washdown
Sensing range max.			
Photoelectric proximity sensor	4 mm ... 500 mm	–	25 mm ... 300 mm
Photoelectric retro-reflective sensor	0 m ... 5 m	0 m ... 5 m	–
Through-beam photoelectric sensor	0 m ... 5 m	–	0 m ... 60 m
Light source	PinPoint LED	PinPoint LED	Laser
Type of light	Visible red light	Visible red light	Visible red light
Enclosure rating	IP 66, IP 67, IP 68, IP 69K	IP 66, IP 67, IP 68, IP 69K	IP 66, IP 67, IP 68, IP 69K
Housing material	Stainless steel	Stainless steel	Stainless steel
At a glance			
	• Smooth stainless steel housing (316L/1.4404) • Hygienic mounting using M12-adapter thread or D12-adapter shaft • IP 66, IP 67, IP 68 and IP 69K enclosure rating and Ecolab certified • Resistant to a variety of common cleaning and disinfection agents • Highly visible laser-like light spot due to PinPoint LED • Teach-in via stainless steel pushbutton with a metal membrane	• Hygienic designed stainless steel housing and accessories (316L/1.4404) • Hygienic mounting using M12-adapter thread or D12-adapter shaft • IP 66, IP 67, IP 68 and IP 69K enclosure rating and Ecolab certified • Resistant to a variety of common cleaning and disinfection agents • PinPoint LED technology provides a highly visible laser-like light spot • Teach-in stainless steel metal membrane or external teach-in	• Precise laser light spot, laser class 1 • Stainless steel housing with washdown design • Latest SIRIC® and laser technologies for outstanding background suppression and ambient light immunity • Teach-in pushbutton can be switched between detection of transparent and tiny non-transparent objects • ECOLAB certified, tested to IP 66, IP 67, IP 68 and IP 69K enclosure rating • IO-Link (optional)
Detailed information	➜ F-320	➜ F-334	➜ F-342

F

			
	W4SLG-3V	**W4SL-3H**	**W4SLG-3H**
	Detect all transparent objects with one device – Change mode via teach button	Laser technology and stainless steel hygienically combined	Detect all transparent objects with one device – Change mode via teach button
	15.3 mm x 55.4 mm x 22.2 mm	15.3 mm x 63.2 mm x 22.2 mm	15.3 mm x 63.2 mm x 22.2 mm
	Washdown	Hygiene	Hygiene
	–	25 mm ... 300 mm	–
	0 m ... 4.5 m	–	0 m ... 4.5 m
	–	–	–
	Laser	Laser	Laser
	Visible red light	Visible red light	Visible red light
	IP 66, IP 67, IP 68, IP 69K	IP 66, IP 67, IP 68, IP 69K	IP 66, IP 67, IP 68, IP 69K
	Stainless steel	Stainless steel	Stainless steel
	• Precise laser light spot, laser class 1, no blind spots • Stainless steel housing with wash-down design • Latest SIRIC® and laser technologies for very good background suppression and ambient light immunity • ECOLAB certified, tested to IP66, IP67, IP68 and IP69K enclosure rating • Teach-in pushbutton can be switched between detection of transparent and tiny non-transparent objects • IO-Link (optional)	• Precise laser light spot, laser class 1 • Stainless steel housing with wash down design • Latest SIRIC® and laser technologies for outstanding background suppression and ambient light immunity • Teach-in pushbutton can be switched between detection of transparent and tiny non-transparent objects • ECOLAB certified, tested to IP 66, IP 67, IP 68 and IP 69K enclosure rating • IO-Link (optional)	• Precise laser light spot, laser class 1 • Stainless steel housing with hygienic design • Latest SIRIC® and laser technologies for outstanding background suppression and ambient light immunity • Teach-in pushbutton can be switched between detection of transparent and tiny non-transparent objects • ECOLAB certified, tested to IP 66, IP 67, IP 68 and IP 69K enclosure rating • IO-Link (optional)
	➜ F-350	➜ F-358	➜ F-364

F

Product family overview

	W8	W8G	W8 Inox
			
	High-performance object detection at close range	Photoelectric sensor detects transparent objects at close range	Compact, high-performance INOX sensors for harsh wash down environments
Technical data overview			
Dimensions (W x H x D)	11 mm x 31 mm x 20 mm	11 mm x 31 mm x 20 mm	11 mm x 21 mm x 33.3 mm
Sensing range max.			
Photoelectric proximity sensor	5 mm ... 300 mm	–	0 mm ... 950 mm
Photoelectric retro-reflective sensor	0 m ... 4 m	0 m ... 3 m	0.01 m ... 6.5 m
Through-beam photoelectric sensor	–	–	0 m ... 45 m
Light source	LED	LED	LED
Type of light	Visible red light	Visible red light	Visible red light
Enclosure rating	IP 67	IP 67	IP 69K
Housing material	Plastic	Plastic	Stainless steel
At a glance			
	• Miniature housing with M3 threaded mounting holes • Switching frequency up to 2 kHz • Stainless steel mounting bracket (1.4301/304) BEF-W100-A included with delivery	• Autocollimation • Standard miniature housing with M3 threaded mounting holes • Light/dark switching selectable via rotary switch • Adjustable sensing range • All necessary accessories (BEF-W100-A and P250) are included with delivery	• Rugged IP 69K stainless steel housing 1.4404/316L • Front screen made of high-performance PPSU plastic that is resistant to heat and chemicals • Potentiometer made of mechanically stable high-performance PEEK (polyether ketone) plastic • Constructed with FDA-approved materials • Well-defined, highly visible light spot • M3 threaded mounting holes and stainless steel mounting bracket (1.4301/304) included with delivery
Detailed information	➜ F-372	➜ F-380	➜ F-386

F

			
	W8 Laser	**W100-2**	**W100 Laser**
	Laser photoelectric proximity sensor with background suppression for close-range applications	Miniature photoelectric sensors for standard applications	Miniature photoelectric laser sensor provides precise detection of objects in standard applications
	11 mm x 31 mm x 20 mm	11 m x 31 m x 20 m	11 mm x 31 mm x 20 mm
	5 mm ... 300 mm	0 mm ... 1,000 mm	0 mm ... 450 mm
	–	0.01 m ... 7.5 m	0.08 m ... 12 m
	–	0 m ... 30 m	0 m ... 35 m
	Laser	LED	Laser
	Visible red light	Visible red light	Visible red light
	IP 67	IP 67	IP 65
	Plastic	Plastic	Plastic
	• Laser class 1 • Background suppression • Standard miniature housing with M3 threaded mounting holes • Switching frequency up to 2 kHz • Light/dark switching via rotary switch • Mounting bracket BEF-W100-A is included with delivery	• Reliable detection behavior, rugged housing and immunity to ambient light • WT100-2 photoelectric proximity sensor (energetic or with background blanking) • WL100-2 photoelectric retro-reflective sensor; variant available for detecting transparent objects • WS/WE100-2 through-beam photoelectric sensor • Various connection types available (standard: 2 m cable; M8 male connector, 3-pin; M8 male connector, 4-pin; male cable connector available on request) • Light/dark switching and sensitivity adjustment possible • Wide range of accessories	• Standard miniature housing with M3 threaded mounting holes • Long sensing range • Light/dark switching and sensitivity adjustment via rotary switch possible • Various versions are available, including through-beam, retro-reflective and energetic • Wide variety of accessories available • Laser emitter LED, class 1
	➜ F-398	➜ F-404	➜ F-412

F

No space is too small

F

Product description

Machines and systems are becoming more compact while the space available for sensors is shrinking. Sub-miniature sensors in the G2S product family feature a rugged, compact housing that can be integrated into various applications with limited space. These sensors feature a long sensing range with reliable object detection.

At a glance

- Complete product family of photoelectric sensors in a tried-and-tested sensor design
- Adjustable BGS photoelectric proximity sensor with an sensing range up to 120 mm
- Optical performance data that exceeds market standards for sensing range and housing design
- Reliable detection of jet-black, poorly reflective and highly reflective objects
- PinPoint LED ensures high sensing ranges and reliable object detection

Your benefits

- Reliable object detection in confined environments helps cut costs and save space
- Sub-miniature housing enables seamless integration and creates opportunities for new machine designs
- Tried-and-tested, rugged housing design can be easily integrated into compact machines and systems
- Complete, ultra-small product family with operating functions for every application
- The 45-degree tilted cable entry offers maximum installation flexibility with additional soft rubber bearings to absorb vibrations and tensile loads

Additional information

→ **www.mysick.com/en/G2S**

For more information, just enter the link or scan the QR code and get direct access to technical data, CAD design models, operating instructions, software, application examples and much more.

Detailed technical data

Features

	GTB2S ,fix	GTB2S, adjustable	GL2S	GSE2S
Sensor principle	Photoelectric proximity sensor		Photoelectric retro-reflective sensor	Through-beam photo-electric sensor
Detection principle	Background suppression		Standard optics	–
Dimensions (W x H x D)	7.7 mm x 21.8 mm x 13.5 mm	7.7 mm x 27.5 mm x 13.5 mm	7.7 mm x 21.8 mm x 13.5 mm	
Housing design (light emission)	Rectangular			
Sensing range max.	1 mm ... 36 mm [1] (depending on type)	2 mm ... 120 mm [1]	0.02 m ... 3 m [2]	0 m ... 2 m
Sensing range	4 mm ... 30 mm [3] (depending on type)	25 mm ... 90 mm [3]	0.03 m ... 2.5 m [2]	0 m ... 1.5 m
Background suppression typ. from	20 mm / 38 mm (depending on type)	–		
Type of light	Visible red light			
Light source [4]	PinPoint LED			
Wave length	640 nm			
Adjustment	–	Potentiometer, 3 turns	–	

[1] Object with 90 % reflectance (referred to standard white, DIN 5033)
[2] PL40A.
[3] Object with 6 % remission.
[4] Average service life of 100,000 h at T_A = +25 °C.

F

Mechanics/electronics

	GTB2S, fix	GTB2S, adjustable	GL2S	GSE2S
Supply voltage [1]	10 V DC ... 30 V DC			
Ripple [2]	≤ 5 V_{pp}			
Power consumption [3]	≤ 20 mA			
Output type	PNP / NPN (depending on type)			
Switching mode	Light switching / Dark-switching (depending on type)			
Output current $I_{max.}$	< 50 mA			
Response time [4]	< 0.6 ms			
Switching frequency [5]	800 Hz			
Connection type	Cable, 2 m [6] / Cable with connector, M8, 200 mm [6] (depending on type)			
Circuit protection	A [7], C [8], D [9]			
Polarisation filter	–		✔	–
Housing material	ABS			
Optics material	PMMA			
Enclosure rating	IP 67			
Ambient operating temperature	–20 °C ... +50 °C			
Ambient storage temperature	–40 °C ... +75 °C			

[1] Limit values, operation in short-circuit protected network max. 8 A.
[2] May not exceed or fall short of V_S tolerances.
[3] Without load.
[4] Signal transit time with resistive load.
[5] With light/dark ratio 1:1.
[6] Do not bend below 0 °C.
[7] A = V_S connections reverse-polarity protected.
[8] C = interference suppression.
[9] D = outputs overcurrent and short-circuit protected.

Ordering information

Other models available at www.mysick.com/en/G2S

GTB2S

- **Sensor principle:** photoelectric proximity sensor
- **Detection principle:** background suppression

Sensing range max. [1]	Light spot size (distance)	Output type	Switching mode	Connection	Connection diagram	Model name	Part no.
1 mm ... 18 mm	Ø 2 mm (8 mm)	PNP	Light switching	Cable, 3-wire 2 m	Cd-043	GTB2S-P1311	1064345
				Cable with connector M8, 3-pin 200 mm	Cd-045	GTB2S-P5311	1062872
			Dark-switching	Cable, 3-wire 2 m	Cd-043	GTB2S-F1311	1064346
				Cable with connector M8, 3-pin 200 mm	Cd-045	GTB2S-F5311	1064347
		NPN	Light switching	Cable, 3-wire 2 m	Cd-043	GTB2S-N1311	1062840
				Cable with connector M8, 3-pin 200 mm	Cd-045	GTB2S-N5311	1064349
			Dark-switching	Cable, 3-wire 2 m	Cd-043	GTB2S-E1311	1064348
1 mm ... 36 mm	Ø 3 mm (15 mm)	PNP	Light switching	Cable, 3-wire 2 m	Cd-043	GTB2S-P1331	1064351
				Cable with connector M8, 3-pin 200 mm	Cd-045	GTB2S-P5331	1062930
			Dark-switching	Cable with connector M8, 3-pin 200 mm	Cd-045	GTB2S-F5331	1064353
		NPN	Light switching	Cable, 3-wire 2 m	Cd-043	GTB2S-N1331	1062929
			Dark-switching	Cable, 3-wire 2 m	Cd-043	GTB2S-E1331	1064354
2 mm ... 120 mm	Ø 3.5 mm (50 mm)	PNP	Light switching	Cable, 3-wire 2 m	Cd-043	GTB2S-P1451	1060205
				Cable with connector M8, 3-pin 200 mm	Cd-045	GTB2S-P5451	1060204
			Dark-switching	Cable with connector M8, 3-pin 200 mm	Cd-045	GTB2S-F5451	1064341
		NPN	Light switching	Cable, 3-wire 2 m	Cd-043	GTB2S-N1451	1060203
				Cable with connector M8, 3-pin 200 mm	Cd-045	GTB2S-N5451	1064343
			Dark-switching	Cable, 3-wire 2 m	Cd-043	GTB2S-E1451	1064342
				Cable with connector M8, 3-pin 200 mm	Cd-045	GTB2S-E5451	1064344

[1] Object with 90 % reflectance (referred to standard white, DIN 5033)

F

GL2S

- **Sensor principle:** Photoelectric retro-reflective sensor
- **Detection principle:** Standard optics

Sensing range max. [1]	Light spot size (distance)	Output type	Switching mode	Connection	Connection diagram	Model name	Part no.
0.02 m ... 3 m	Ø 11 mm (250 mm)	PNP	Light switching	Cable with connector M8, 3-pin 200 mm	Cd-045	GL2S-P5311	1064359
			Dark-switching	Cable, 3-wire 2 m	Cd-043	GL2S-F1311	1064358
				Cable with connector M8, 3-pin 200 mm	Cd-045	GL2S-F5311	1063008
		NPN	Light switching	Cable, 3-wire 2 m	Cd-043	GL2S-N1311	1064360
						GL2S-N1312	1064423
			Dark-switching	Cable, 3-wire 2 m	Cd-043	GL2S-E1311	1063009
						GL2S-E1312	1064424

[1] PL40A.

GSE2S

- **Sensor principle:** through-beam photoelectric sensor

Sensing range max.	Light spot size (distance)	Output type	Switching mode	Connection	Connection diagram	Model name	Part no.
0 m ... 2 m	Ø 23 mm (500 mm)	PNP	Light switching	Cable with connector M8, 3-pin 200 mm	Cd-051	GSE2S-P5311	1064364
			Dark-switching	Cable, 3-wire 2 m	Cd-049	GSE2S-F1311	1064363
				Cable with connector M8, 3-pin 200 mm	Cd-051	GSE2S-F5311	1063072
		NPN	Light switching	Cable, 3-wire 2 m	Cd-049	GSE2S-N1311	1064365
			Dark-switching	Cable, 3-wire 2 m	Cd-049	GSE2S-E1311	1063070

Dimensional drawings

Dimensions in mm (inch)

GTB2S, 15 mm, 30 mm

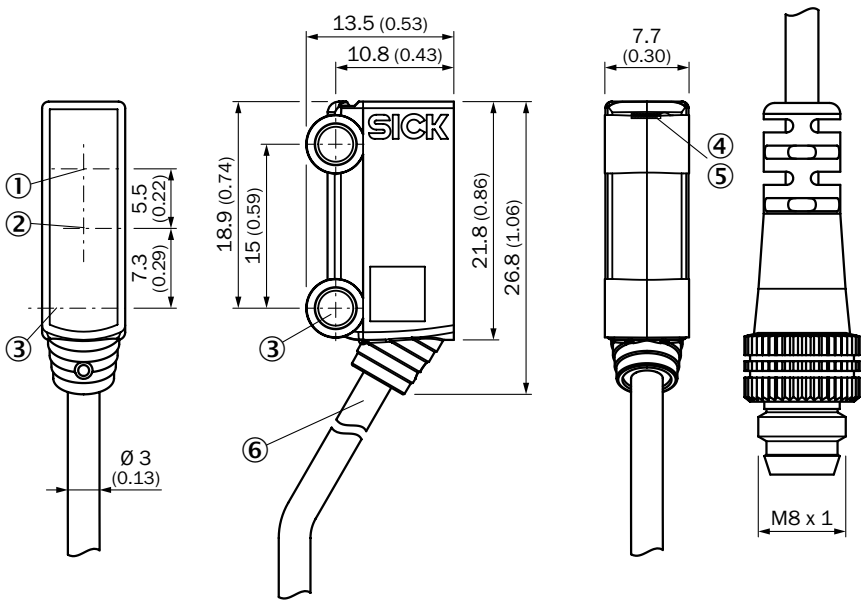

① Optical axis receiver
② Optical axis sender
③ Mounting hole, Ø 3.2 mm
④ Status indicator LED green: power on
⑤ Status indicator LED, yellow: Status of received light beam
⑥ Connection

F

F

GTB2S, 120 mm

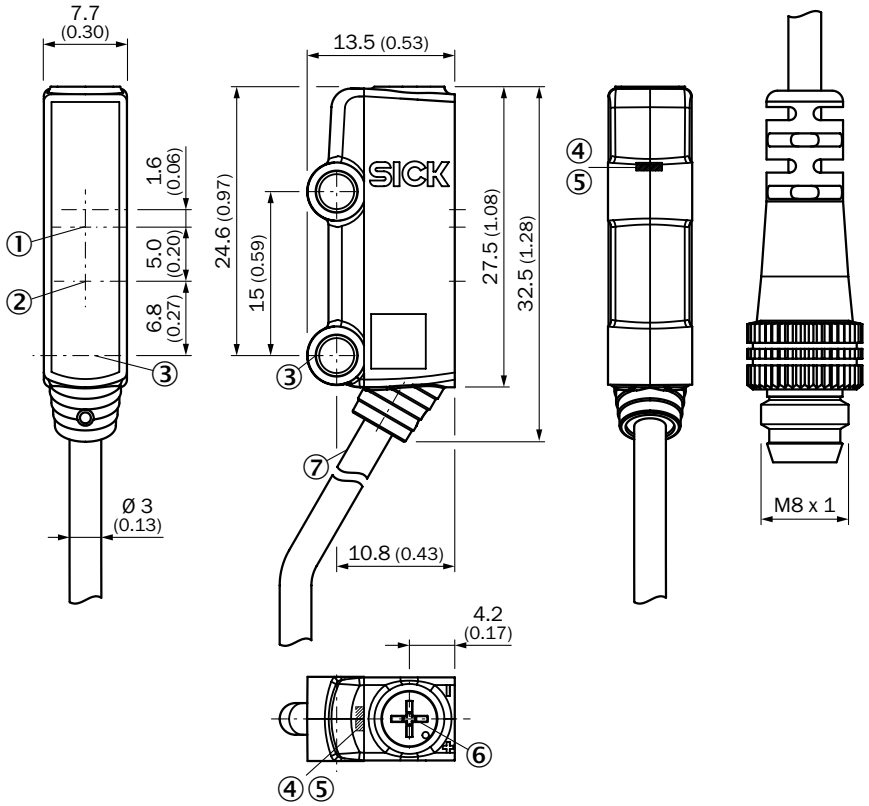

① Optical axis receiver
② Optical axis sender
③ Mounting hole, Ø 3.2 mm
④ Status indicator LED green: power on
⑤ Status indicator LED, yellow: status of received light beam
⑥ Potentiometer
⑦ Connection

GL2S

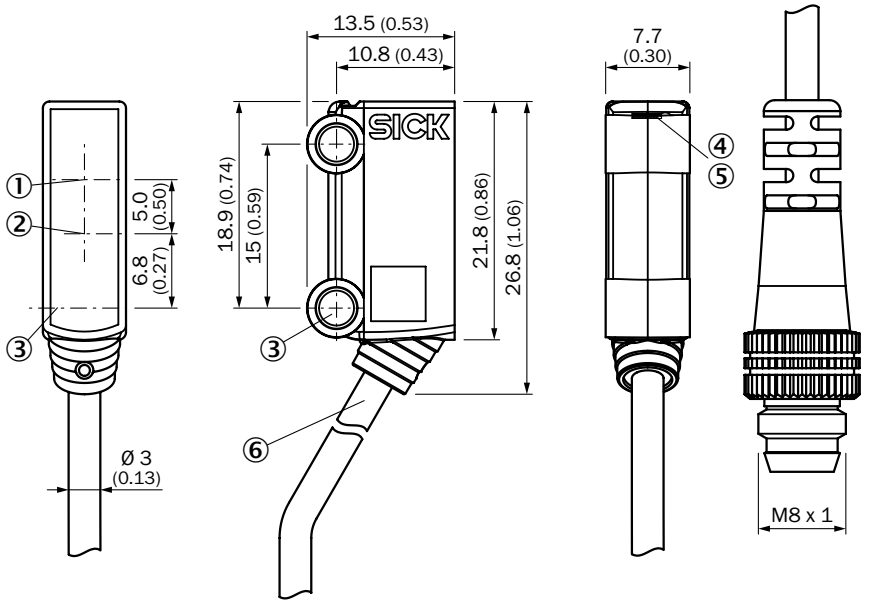

① Optical axis receiver
② Optical axis sender
③ Mounting hole, Ø 3.2 mm
④ Status indicator LED green: power on
⑤ Status indicator LED, yellow: status of received light beam
⑥ Connection

GSE2S

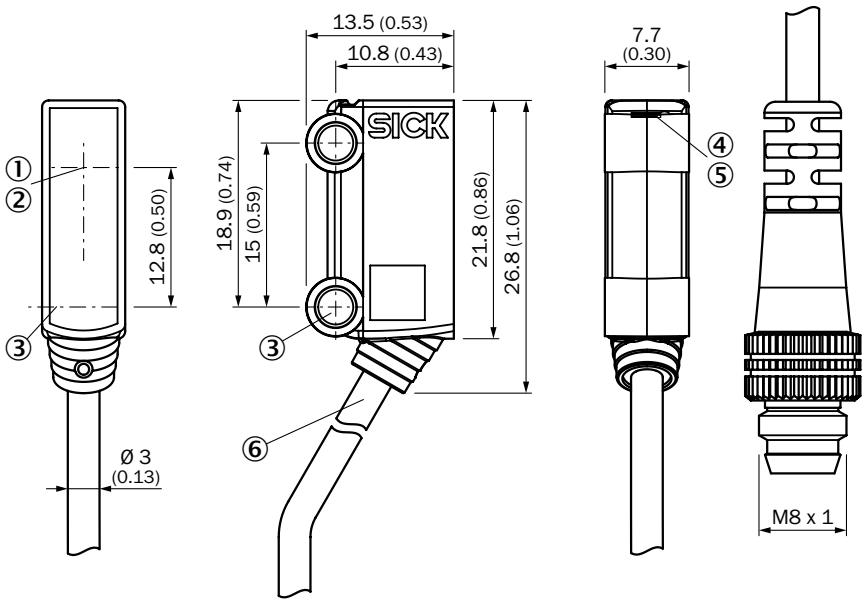

① Optical axis receiver
② Optical axis sender
③ Mounting hole, Ø 3.2 mm
④ Status indicator LED green: power on
⑤ Status indicator LED, yellow: status of received light beam
⑥ Connection

Characteristic curves

Black-white shift

GTB2S, 120 mm

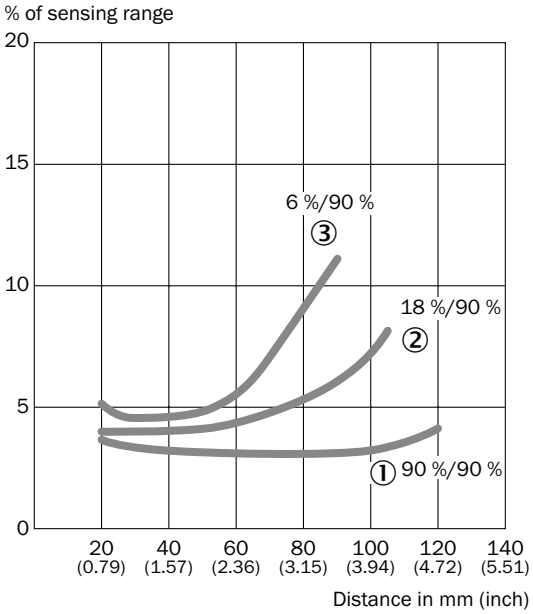

① Sensing range on white, 90 % remission
② Sensing range on gray, 18 % remission
③ Sensing range on black, 6 % remission

F

Operating reserve

GL2S

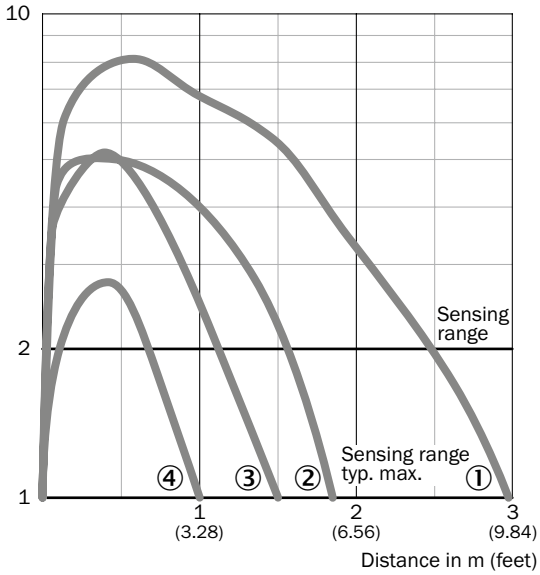

① PL40A
② PL20A
③ PL10F
④ IREF6000 (REF-IRF-56)

GSE2S

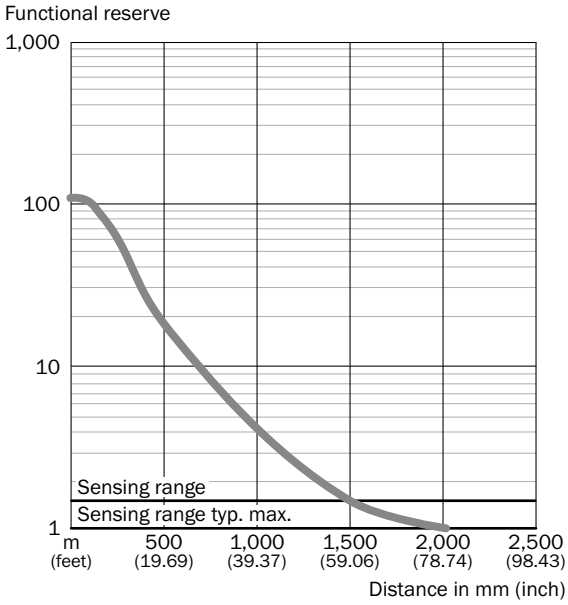

F

Bar diagrams

GTB2S, 15 mm

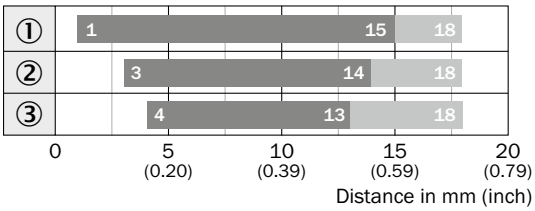

Sensing range Sensing range typ. max.

① Sensing range on white, 90 % remission
② Sensing range on gray, 18 % remission
③ Sensing range on black, 6 % remission

GTB2S, 30 mm

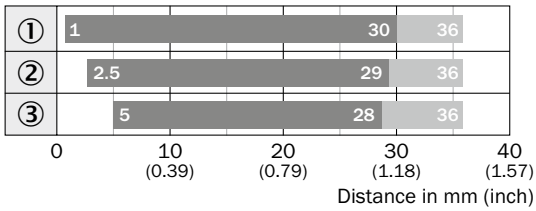

Sensing range Sensing range max.

① Sensing range on white, 90 % remission
② Sensing range on gray, 18 % remission
③ Sensing range on black, 6 % remission

GTB2S, 120 mm

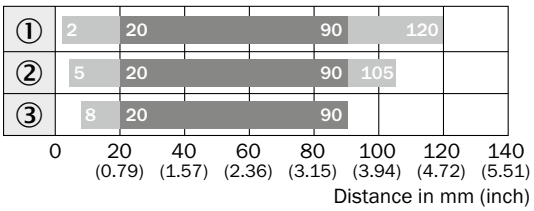

Sensing range Sensing range max.

① Sensing range on white, 90 % remission
② Sensing range on gray, 18 % remission
③ Sensing range on black, 6 % remission

GL2S

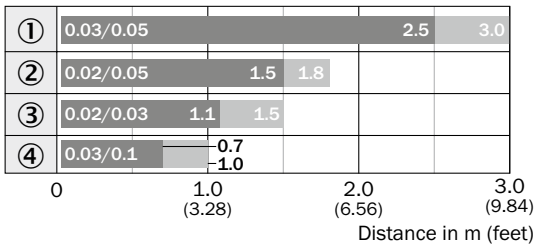

Sensing range Sensing range typ. max.

① PL40A
② PL20A
③ PL10F
④ IREF6000 (REF-IRF-56)

GSE2S

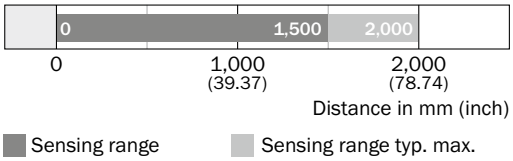

Light spot diameter

GTB2S, 15 mm

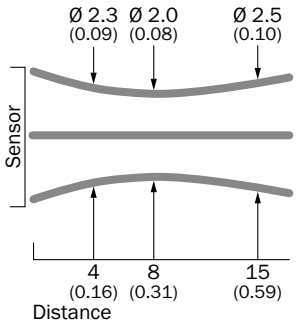

GTB2S, 30 mm

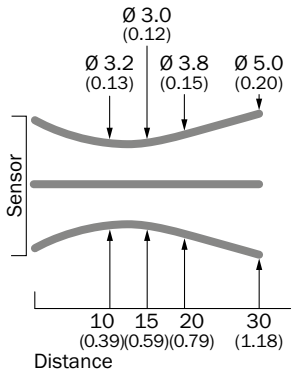

GTB2S, 120 mm

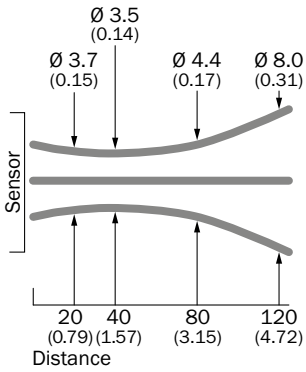

GL2S

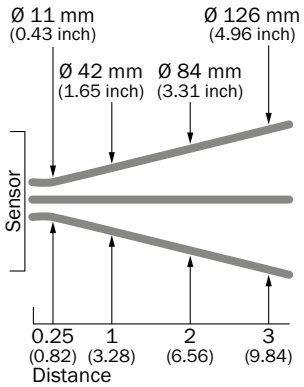

GSE2S

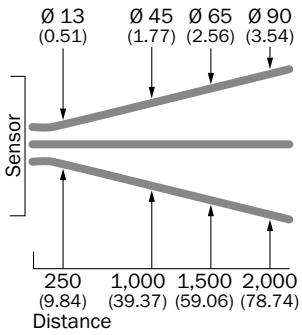

F

Connection diagram

Cd-043

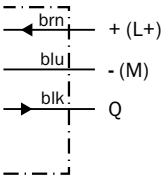

Cd-045

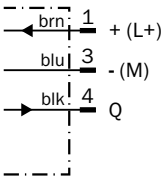

Cd-049

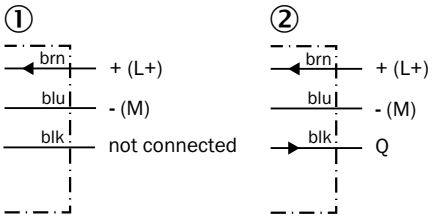

① Sender
② Receiver

Cd-051

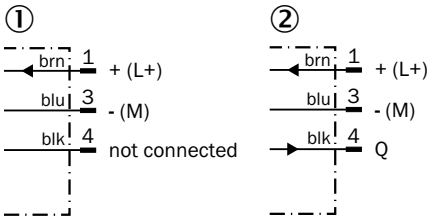

① Sender
② Receiver

Recommended accessories

Plug connectors and cables

Connecting cable (female connector-open), PUR, halogen-free

- **Cable material:** PUR, halogen-free
- **Connector material:** TPU

Figure	Connection type head A	Connection type head B	Connecting cable	Enclosure rating	Model name	Part no.
	Female connector, M8, 3-pin, straight	Cable, open conductor heads	2 m, 3-wire	IP 65, IP 68, IP 69K	DOL-0803-G02MC	6025888
	Female connector, M8, 3-pin, angled	Cable, open conductor heads	2 m, 3-wire	IP 65, IP 68, IP 69K	DOL-0803-W02MC	6025891
	Female connector, M8, 4-pin, straight	Cable, open conductor heads	2 m, 4-wire	IP 65, IP 68, IP 69K	DOL-0804-G02MC	6025894
	Female connector, M8, 4-pin, angled	Cable, open conductor heads	2 m, 4-wire	IP 65, IP 68, IP 69K	DOL-0804-W02MC	6025897

Connecting cable (female connector-open), PVC

- **Cable material:** PVC
- **Connector material:** TPU

F

Figure	Connection type head A	Connection type head B	Connecting cable	Enclosure rating	Model name	Part no.
	Female connector, M8, 3-pin, straight	Cable, open conductor heads	2 m, 3-wire	IP 67	DOL-0803-G02M	6010785
	Female connector, M8, 3-pin, angled	Cable, open conductor heads	2 m, 3-wire	IP 67	DOL-0803-W02M	6008489
	Female connector, M8, 4-pin, straight	Cable, open conductor heads	2 m, 4-wire	IP 67	DOL-0804-G02M	6009870
	Female connector, M8, 4-pin, angled	Cable, open conductor heads	2 m, 4-wire	IP 67	DOL-0804-W02M	6009871

Female connector (ready to assemble) M8, 3-pin

Figure	Connection type head A	Connection type head B	Connector material	Enclosure rating	Model name	Part no.
	Female connector, M8, 3-pin, straight	Screw-type terminals	PBT	IP 67	DOS-0803-G	7902077
	Female connector, M8, 3-pin, angled	Pin penetration	PBT	IP 67	DOS-0803-W	7902078

Male connector (ready to assemble) M8, 3-pin

Figure	Connection type head A	Connection type head B	Connector material	Enclosure rating	Model name	Part no.
	Male connector, M8, 3-pin, straight	Screw-type terminals	PBT	IP 67	STE-0803-G	6037322

Reflectors

Angular

Figure	Material	Description	Model name	Part no.
	PMMA/ABS	Rectangular, screw connection, 47 mm x 47 mm	P250	5304812
		Rectangular, screw connection, 38 mm x 15 mm	PL20A	1012719
		Rectangular, screw connection, 56 mm x 28 mm	PL30A	1002314
		Rectangular, screw connection, 37 mm x 56 mm	PL40A	1012720
		Rectangular, screw connection, 80 mm x 80 mm	PL80A	1003865

Fine triple reflectors

Figure	Material	Description	Model name	Part no.
	PMMA/ABS	Fine triple, screw connection, suitable for laser sensors, 18 mm x 18 mm	PL10F	5311210

Reflective tape

Figure	Description	Model name	Part no.
	Self-adhesive, 50 mm x 60 mm	REF-IRF-56	5314244

Round

Figure	Material	Description	Model name	Part no.
	PMMA/ABS	Round, plugable for metal plates	PL22-3	1004488

→ **For additional accessories, please see page L-861**

F

F

Global sensor – the economic way to business class performance

Product description

The G6 Global photoelectric sensor is enclosed in a miniature housing and provides an optimal price-performance ratio. This sensor provides outstanding sensing performance using a standard 1-inch hole distance. With PinPoint LEDs, metal inserts for mounting, large indicator LEDs, large user-friendly adjustment potentiometers, an IP 67 enclosure rating and the very latest SICK ASIC technology, this is truly a high performance sensor in a small package.

At a glance

- PinPoint LED for a bright, precise light spot
- Durable metal threaded inserts
- SICK ASIC technology – the result of decades of experience in photoelectric sensors
- Large, user-friendly potentiometer
- Large, bright indicator LEDs
- IP 67 enclosure rating

Your benefits

- Easy alignment and precise object detection due to a highly visible PinPoint LED
- Quick and easy mounting and high durability due to threaded metal inserts
- SICK ASIC technology provides high performance and excellent reliability
- Easy to adjust due to large, user-friendly potentiometers
- Easy to monitor due to large, bright indicator LEDs
- Easy installation with SICK accessories

Additional information

→ **www.mysick.com/en/G6**

For more information, just enter the link or scan the QR code and get direct access to technical data, CAD design models, operating instructions, software, application examples and much more.

Detailed technical data

Features

	GTE6	GTB6	GL6	GL6G	GSE6
Sensor principle	Photoelectric proximity sensor		Photoelectric retro-reflective sensor		Through-beam photoelectric sensor
Detection principle	Energetic	Background suppression	Standard optics		–
Dimensions (W x H x D)	12 mm x 31.5 mm x 21 mm				
Housing design (light emission)	Rectangular				
Sensing range max.	≤ 300 mm [1]	5 mm ... 250 mm [1]	≤ 6 m [2]		0 m ... 15 m
Sensing range	≤ 250 mm	35 mm ... 140 mm	≤ 5 m [2]		0 m ... 10 m
Type of light	Visible red light				
Light source [3]	PinPoint LED				
Wave length	650 nm				
Adjustment	Mechanical spindle, 5 turns		Potentiometer, 270 °		
Special feature	–			Detection of transparent objects	–

[1] Object with 90 % reflectance (referred to standard white, DIN 5033)
[2] PL80A.
[3] Average service life of 100,000 h at T_A = +25 °C.

F

Mechanics/electronics

	GTE6	GTB6	GL6	GL6G	GSE6
Supply voltage [1]	10 V DC ... 30 V DC				
Ripple [2]	± 10 %				
Power consumption [3]	≤ 30 mA				
Output type	PNP, open collector / NPN, open collector				
Switching mode	Light/dark-switching (selectable via light/dark selector)				
Signal voltage PNP HIGH/LOW	V_S – (<=3 V) / approx. 0 V				
Signal voltage NPN HIGH/LOW	Approx. V_S / <= 3 V				
Output current $I_{max.}$ [4]	≤ 100 mA				
Response time [5]	< 1,250 ms	< 625 µs			< 500 µs
Switching frequency [6]	500 Hz	1,000 Hz			
Attenuation along light beam	–			> 20 %	–
Connection type	Cable, 2 m [7] Male connector, M8 Cable with connector, M8, 300 mm [7] Cable with connector, M12, 300 mm [7] (depending on type)				
Circuit protection	A [8], B [9], D [10]				
Protection class	III				
Weight					
Connector	20 g				40 g
Cable/Cable with connector	60 g				170 g
Polarisation filter	–		✔		–
Housing material	ABS/PC				

	GTE6	GTB6	GL6	GL6G	GSE6
Optics material	PMMA				
Enclosure rating	IP 67				
Items supplied	Stainless steel mounting bracket (1.4301/304) BEF-W100-A		Stainless steel mounting bracket (1.4301/304) BEF-W100-A, Reflector P250		Stainless steel mounting bracket (1.4301/304) BEF-W100-A
Ambient operating temperature [11]	–25 °C ... +55 °C				
Ambient storage temperature	–40 °C ... +70 °C				

[1] Limit values, operation in short-circuit protected network max. 8 A.
[2] May not exceed or fall short of V_S tolerances.
[3] Without load.
[4] At Vs > 24 V, I_A max = 50 mA.
[5] Signal transit time with resistive load.
[6] With light/dark ratio 1:1.
[7] Do not bend below 0 °C.
[8] A = V_S connections reverse-polarity protected.
[9] B = inputs and output reverse-polarity protected.
[10] D = outputs overcurrent and short-circuit protected.
[11] Temperature stability after adjustment +/-10 °C.

Ordering information

Other models available at www.mysick.com/en/G6

F

GTE6

- **Sensor principle:** photoelectric proximity sensor
- **Detection principle:** energetic
- **Light spot size (distance):** Ø 7 mm (90 mm)
- **Switching mode:** light/dark-switching

Sensing range max. [1]	Output type	Adjustment	Connection	Connection diagram	Items supplied	Model name	Part no.
≤ 300 mm	PNP	Mechanical spindle, 5 turns	Cable, 3-wire, 2 m, PVC	Cd-043	–	GTE6-P1211	1050712
					Stainless steel mounting bracket BEF-W100-A	GTE6-P1212	1051783
			Connector M8, 4-pin	Cd-066	–	GTE6-P4211	1050710
					Stainless steel mounting bracket BEF-W100-A	GTE6-P4212	1051781
			Cable with connector M12, 4-pin, 300 mm, PVC	Cd-066	–	GTE6-P7211	1053589
					Stainless steel mounting bracket BEF-W100-A	GTE6-P7212	1053628
	NPN	Mechanical spindle, 5 turns	Cable, 3-wire, 2 m, PVC	Cd-043	–	GTE6-N1211	1050713
					Stainless steel mounting bracket BEF-W100-A	GTE6-N1212	1051784
			Connector M8, 4-pin	Cd-066	–	GTE6-N4211	1050711
					Stainless steel mounting bracket BEF-W100-A	GTE6-N4212	1051782

[1] Object with 90 % reflectance (referred to standard white, DIN 5033)

GTB6

- **Sensor principle:** photoelectric proximity sensor
- **Detection principle:** background suppression
- **Light spot size (distance):** Ø 6 mm (100 mm)
- **Switching mode:** light/dark-switching

Sensing range max. [1]	Output type	Adjustment	Connection	Connection diagram	Items supplied	Model name	Part no.
5 mm ... 250 mm	PNP	Mechanical spindle, 5 turns	Cable, 3-wire, 2 m, PVC	Cd-043	–	GTB6-P1211	1052440
					Stainless steel mounting bracket BEF-W100-A	GTB6-P1212	1052444
			Connector M8, 4-pin	Cd-066	–	GTB6-P4211	1052438
					Stainless steel mounting bracket BEF-W100-A	GTB6-P4212	1052442
			Cable with connector M8, 3-pin, 300 mm	Cd-043	–	GTB6-P5211	1059333
			Cable with connector M8, 4-pin, 300 mm	Cd-066	–	GTB6-P6211	1059320
			Cable with connector M12, 4-pin, 300 mm	Cd-066	–	GTB6-P7211	1057705
	NPN		Cable, 3-wire, 2 m, PVC	Cd-043	–	GTB6-N1211	1052441
					Stainless steel mounting bracket BEF-W100-A	GTB6-N1212	1052445
			Connector M8, 4-pin	Cd-066	–	GTB6-N4211	1052439
					Stainless steel mounting bracket BEF-W100-A	GTB6-N4212	1052443
			Cable with connector M8, 4-pin, 300 mm	Cd-066	–	GTB6-N6211	1058774
					Stainless steel mounting bracket BEF-W100-A	GTB6-N6212	1058769

[1] Object with 90 % reflectance (referred to standard white, DIN 5033)

F

F

GL6

- **Sensor principle:** photoelectric retro-reflective sensor
- **Light spot size (distance):** Ø 8 mm (350 mm)
- **Switching mode:** light/dark-switching

Sensing range max. [1]	Output type	Adjustment	Connection	Connection diagram	Items supplied	Model name	Part no.
≤ 6 m	PNP	–	Cable, 3-wire, 2 m, PVC	Cd-043	–	GL6-P1111	1050708
					Stainless steel mounting bracket BEF-W100-A, Reflector P250	GL6-P1112	1051779
			Connector M8, 4-pin	Cd-066	–	GL6-P4111	1050706
					Stainless steel mounting bracket BEF-W100-A, Reflector P250	GL6-P4112	1051777
			Cable with connector M8, 4-pin, 300 mm, PVC	Cd-066	–	GL6-P6111	1060234
					Stainless steel mounting bracket BEF-W100-A, Reflector P250	GL6-P6112	1060235
			Connector M12, 4-pin, 300 mm, PVC	Cd-066	–	GL6-P7111	1052966
					Stainless steel mounting bracket BEF-W100-A, Reflector P250	GL6-P7112	1053590
		Potentiometer, 270 °	Cable, 3-wire, 2 m, PVC	Cd-043	Stainless steel mounting bracket BEF-W100-A, Reflector P250	GL6-P1212	1060815
			Connector M8, 4-pin	Cd-066	–	GL6-P4211	1059241
			Cable with connector M8, 4-pin, 300 mm, PVC	Cd-066	–	GL6-P6211	1058851
					Stainless steel mounting bracket BEF-W100-A, Reflector P250	GL6-P6212	1062753
	NPN	–	Cable, 3-wire, 2 m, PVC	Cd-043	–	GL6-N1111	1050709
					Stainless steel mounting bracket BEF-W100-A, Reflector P250	GL6-N1112	1051780
			Connector M8, 4-pin	Cd-066	Stainless steel mounting bracket BEF-W100-A, Reflector P250	GL6-N4112	1051778
		Potentiometer, 270 °	Cable, 3-wire, 2 m, PVC	Cd-043	Stainless steel mounting bracket BEF-W100-A, Reflector P250	GL6-N1212	1060814
			Connector M8, 4-pin	Cd-066	–	GL6-N4211	1059631
			Cable with connector M8, 4-pin, 300 mm, PVC	Cd-066	Stainless steel mounting bracket BEF-W100-A, Reflector P250	GL6-N6212	1062588

[1] PL80A.

GL6G, clear material detection

- **Sensor principle:** photoelectric retro-reflective sensor
- **Light spot size (distance):** Ø 8 mm (350 mm)
- **Switching mode:** light/dark-switching

Sensing range max. [1]	Output type	Adjustment	Connection	Connection diagram	Items supplied	Model name	Part no.
≤ 6 m	PNP	Potentiometer, 270 °	Cable, 3-wire, 2 m, PVC	Cd-043	–	GL6G-P1211	1059924
					Stainless steel mounting bracket BEF-W100-A, Reflector P250	GL6G-P1212	1060812
			Connector M8, 4-pin	Cd-066	–	GL6G-P4211	1059632
					Stainless steel mounting bracket BEF-W100-A, Reflector P250	GL6G-P4212	1060810
	NPN	Potentiometer, 270 °	Cable, 3-wire, 2 m, PVC	Cd-043	–	GL6G-N1211	1059925
					Stainless steel mounting bracket BEF-W100-A, Reflector P250	GL6G-N1212	1060811
			Connector M8, 4-pin	Cd-066	–	GL6G-N4211	1059633
					Stainless steel mounting bracket BEF-W100-A, Reflector P250	GL6G-N4212	1060809

[1] PL80A.

GSE6

- **Sensor principle:** through-beam photoelectric sensor
- **Light spot size (distance):** Ø 375 mm (12 m)
- **Switching mode:** light/dark-switching

Sensing range max.	Output type	Adjustment	Connection	Connection diagram	Items supplied	Model name	Part no.
0 m ... 15 m	PNP	–	Cable, 3-wire, 2 m, PVC	Cd-049	–	GSE6-P1111	1052448
					Stainless steel mounting bracket BEF-W100-A	GSE6-P1112	1052452
			Connector M8, 4-pin	Cd-057	–	GSE6-P4111	1052446
					Stainless steel mounting bracket BEF-W100-A	GSE6-P4112	1052450
			Cable with connector M12, 4-pin, 300 mm, PVC	Cd-057	–	GSE6-P7111	1054830
					Stainless steel mounting bracket BEF-W100-A	GSE6-P7112	1054831
			Cable with connector M8, 4-pin, 300 mm, PVC	Cd-057	–	GSE6-P6111	1054848
					Stainless steel mounting bracket BEF-W100-A	GSE6-P6112	1054850
		Potentiometer, 270 °	Cable, 3-wire, 2 m, PVC	Cd-049	–	GSE6-P1211	1060792
					Stainless steel mounting bracket BEF-W100-A	GSE6-P1212	1061398
			Connector M8, 4-pin, PVC	Cd-057	–	GSE6-P4211	1061394
					Stainless steel mounting bracket BEF-W100-A	GSE6-P4212	1061396
0 m ... 15 m	NPN	–	Cable, 3-wire, 2 m, PVC	Cd-049	–	GSE6-N1111	1052449
					Stainless steel mounting bracket BEF-W100-A	GSE6-N1112	1052453
			Connector M8, 4-pin	Cd-057	–	GSE6-N4111	1052447
					Stainless steel mounting bracket BEF-W100-A	GSE6-N4112	1052451
			Cable with connector M12, 4-pin, 300 mm, PVC	Cd-057	–	GSE6-N7111	1054833
					Stainless steel mounting bracket BEF-W100-A	GSE6-N7112	1054835
			Cable with connector M8, 4-pin, 300 mm, PVC	Cd-057	–	GSE6-N6111	1054849
					Stainless steel mounting bracket BEF-W100-A	GSE6-N6112	1054852
		Potentiometer, 270 °	Cable, 3-wire, 2 m, PVC	Cd-049	–	GSE6-N1211	1060791

Dimensional drawings

Dimensions in mm (inch)

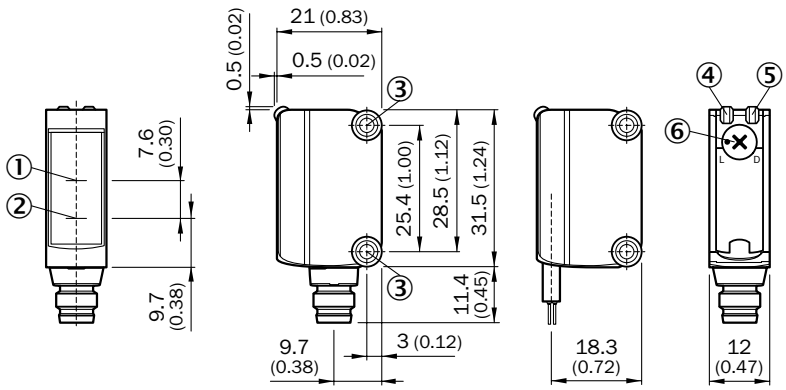

① Optical axis, receiver
② Optical axis, sender
③ Mounting holes M3
④ Status indicator LED green: power on
⑤ Status indicator LED, yellow: Status of received light beam
⑥ Light/ dark rotary switch:
L = light switching, D = dark switching

Adjustments

Adjustment possibility

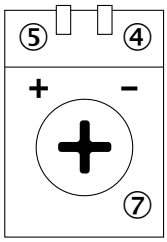

④ Status indicator LED green: power on
⑤ Status indicator LED, yellow:
status of received light beam
⑦ Sensitivity adjustment: poti

No adjustment possibility

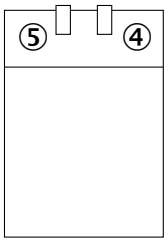

④ Status indicator LED green: power on
⑤ Status indicator LED, yellow:
status of received light beam

F

Characteristic curves

Black-white shift

GTE6

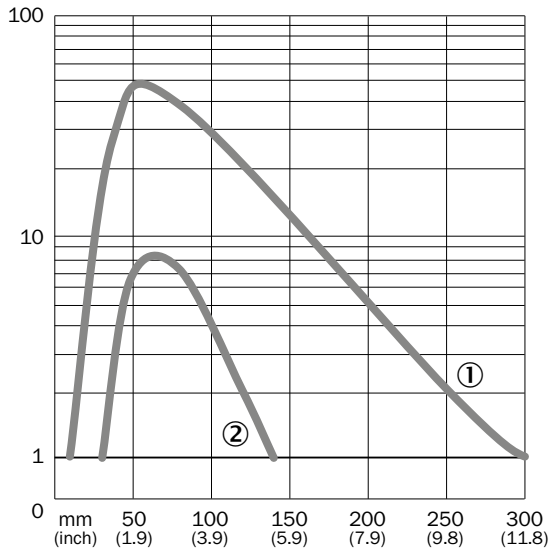

① Object with 90% remission (referred to standard white DIN 5033)
② Sensing range on gray, 18 % remission

GTB6

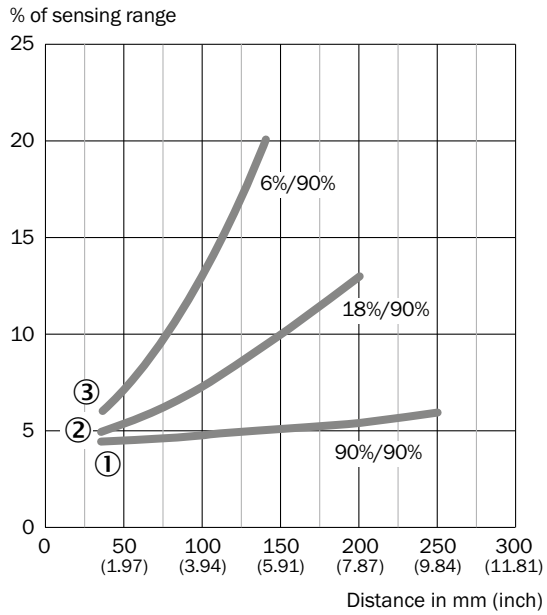

① Object with 90% remission (referred to standard white DIN 5033)
② Sensing range on gray, 18 % remission
③ Sensing range on black, 6 % remission

F

Operating reserve

GL6

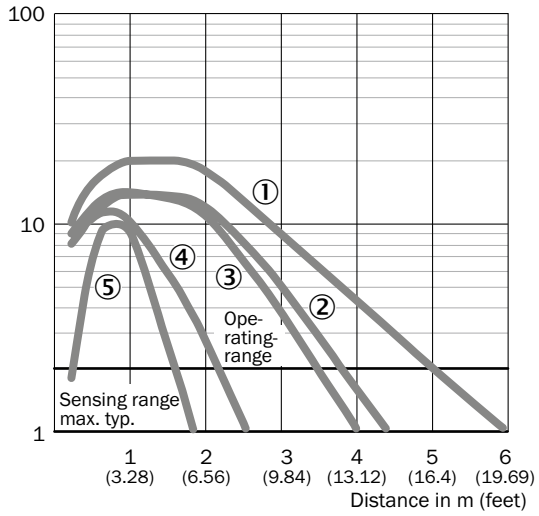

① PL80A
② PL40A
③ P250
④ PL20A
⑤ REF-IRF-56

GSE6

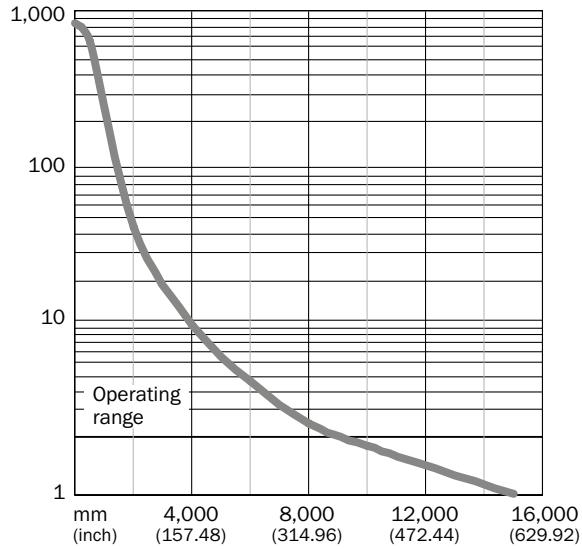

Bar diagrams

GTE6

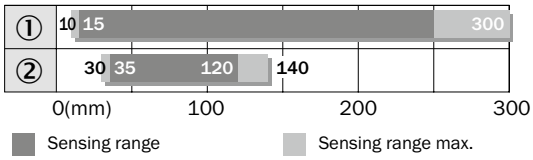

① Object with 90% remission (referred to standard white DIN 5033)
② Sensing range on gray, 18 % remission

GTB6

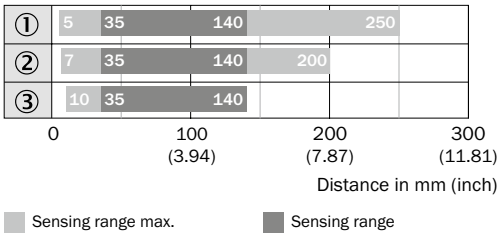

① Object with 90% remission (referred to standard white DIN 5033)
② Sensing range on gray, 18 % remission
③ Sensing range on black, 6 % remission

GL6, GL6G

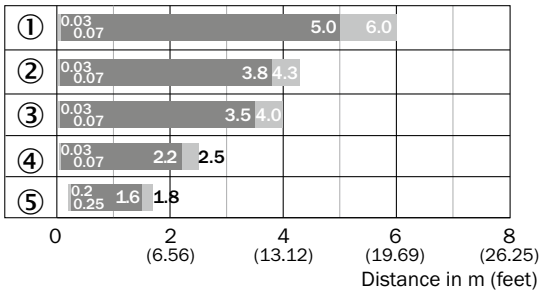

① PL80A
② PL40A
③ P250
④ PL20A
⑤ REF-IRF-56

GSE6

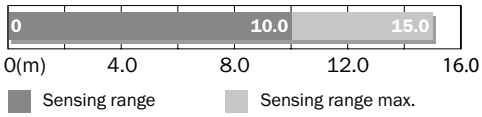

F

Light spot diameter

GTE6

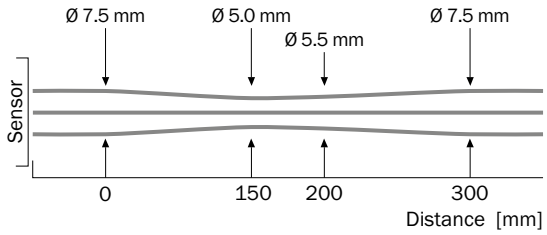

GTB6

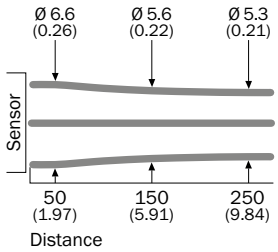

All dimensions in mm (inch)

GL6, GL6G

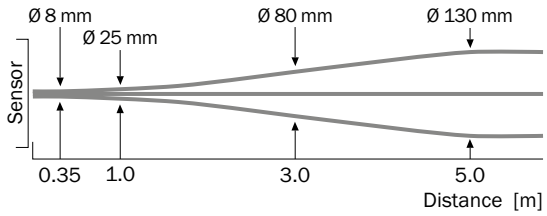

GSE6

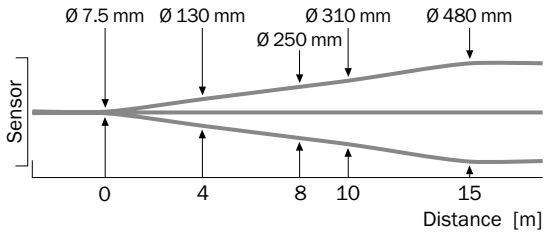

Connection diagram

Cd-043

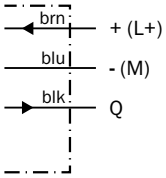

Cd-049

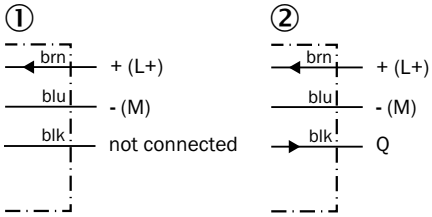

① Sender
② Receiver

Cd-057

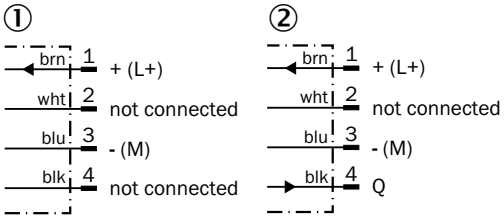

① Sender
② Receiver

Cd-066

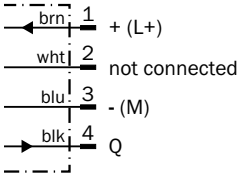

Recommended accessories

F

Mounting brackets/plates

Mounting brackets

Figure	Material	Description	Model name	Part no.
	Stainless steel	Mounting bracket for wall mounting	BEF-W100-A	5311520
	Steel, zinc coated	Mounting bracket for floor mounting	BEF-W100-B	5311521

Plug connectors and cables

Connecting cable (female connector-open)

- **Cable material:** PVC

Figure	Connection type head A	Connection type head B	Connecting cable	Enclosure rating	Model name	Part no.
	Female connector, M8, 4-pin, straight	Cable, open conductor heads	2 m, 4-wire	IP 67	DOL-0804-G02M	6009870
			5 m, 4-wire	IP 67	DOL-0804-G05M	6009872
	Female connector, M8, 4-pin, angled	Cable, open conductor heads	2 m, 4-wire	IP 67	DOL-0804-W02M	6009871
			5 m, 4-wire	IP 67	DOL-0804-W05M	6009873
	Female connector, M12, 4-pin, straight	Cable, open conductor heads	2 m, 4-wire	IP 67	DOL-1204-G02M	6009382
			5 m, 4-wire	IP 67	DOL-1204-G05M	6009866
	Female connector, M12, 4-pin, angled	Cable, open conductor heads	2 m, 4-wire	IP 67	DOL-1204-W02M	6009383
			5 m, 4-wire	IP 67	DOL-1204-W05M	6009867

Device protection (mechanical)

Protective housing/tubes

Figure	Material	Description	Model name	Part no.
	Stainless steel 1.4571	Safety bracket for floor mounting	BEF-SW-W4S	2051497

Reflectors

Angular

Figure	Material	Description	Model name	Part no.
	PMMA/ABS	Rectangular, screw connection, 47 mm x 47 mm	P250	5304812
		Rectangular, screw connection, 56 mm x 28 mm	PL30A	1002314
		Rectangular, screw connection, 80 mm x 80 mm	PL80A	1003865

Fine triple reflectors

F

Figure	Material	Description	Model name	Part no.
	PMMA/ABS	Fine triple, screw connection, suitable for laser sensors, 47 mm x 47 mm	P250F	5308843
		Fine triple, screw connection, suitable for laser sensors, 18 mm x 18 mm	PL10F	5311210
	Plastic	Fine triple, chemically resistant, screw connection, 18 mm x 18 mm	PL10F CHEM	5321636
	PMMA/ABS	Fine triple, screw connection, suitable for laser sensors, 38 mm x 16 mm	PL20F	5308844
	Plastic	Fine triple, chemically resistant, screw connection, suitable for laser sensors, 16 mm x 38 mm	PL20F-CHEM	5326089
	PMMA/ABS	Fine triple, screw connection, suitable for laser sensors, 56 mm x 28 mm	PL30F	5326523
		Fine triple, screw connection, suitable for laser sensors, 76 mm x 45 mm	PL81-1F	5325060

Reflective tape

Figure	Description	Model name	Part no.
	Suitable for laser sensors, self-adhesive, cut, see alignment note, 56.3 mm x 56.3 mm	REF-AC1000-56	4063030
	Self-adhesive, 50 mm x 60 mm	REF-IRF-56	5314244

Round

Figure	Material	Description	Model name	Part no.
	PMMA/ABS	Round, plugable for metal plates	PL22-3	1004488

→ **For additional accessories, please see page L-861**

One of the smallest photoelectric sensor families in the world

F

Product description

The W2 Flat photoelectric sensor family is enclosed in a housing only 3.5 mm high, enabling it to fit in nearly all machine parts for reliable object detection. These sensors, which are one of the smallest photoelectric sensor families in the world, enable thin and compact machine designs. Their rugged housing includes metal-reinforced fixing holes that simplify machine integration. This flat design enables even a milling recess to be used to integrate the sensor safely in the machine.

At a glance

- One of the smallest photoelectric sensors in the world
- No external amplifier required
- Variant designed to detect transparent and glossy objects
- Rugged housing with metal-reinforced fixing holes

Your benefits

- High-performance solutions for very tight spaces provide increased application flexibility
- Fast response times with a high level of accuracy and precise switching points
- The high enclosure rating and the rugged housing offer a long service life that withstands harsh environmental conditions
- Quick and easy installation since sensors can be mounted directly on machine parts

Additional information

→ **www.mysick.com/en/W2_Flat**

For more information, just enter the link or scan the QR code and get direct access to technical data, CAD design models, operating instructions, software, application examples and much more.

Detailed technical data

Features

	WT2 Flat	WS/WE2 Flat
Sensor principle	Photoelectric proximity sensor	Through-beam photoelectric sensor
Detection principle	Energetic	–
Dimensions (W x H x D)	14 mm x 19.5 mm x 3.5 mm	12 mm x 20 mm x 3.5 mm
Housing design (light emission)	Rectangular	
Sensing range max.	1 mm ... 115 mm [1] (depending on type)	0 m ... 0.5 m
Sensing range	1 mm ... 115 mm [1] (depending on type)	0 m ... 0.4 m
Type of light	Visible red light	
Light source [2]	LED	
Light spot size (distance)	–	Ø 10 mm (100 mm)
Wave length	660 nm	

[1] Object with 90 % reflectance (referred to standard white, DIN 5033)
[2] Average service life of 100,000 h at T_A = +25 °C.

Mechanics/electronics

Supply voltage [1]	12 V DC ... 24 V DC
Ripple [2]	≤ 5 V_{pp}
Output type	PNP / NPN (depending on type)
Switching mode	Light switching / Dark-switching (depending on type)
Signal voltage PNP HIGH/LOW	Approx. V_S – 1.8 V / 0 V
Signal voltage NPN HIGH/LOW	Approx. V_S / < 1.8 V
Output current $I_{max.}$	≤ 50 mA
Response time [3]	≤ 0.5 ms
Switching frequency [4]	1,000 Hz
Connection type	Cable, 2 m [5] / Cable with connector, M8, 200 mm [5] (depending on type)
Circuit protection	A [6], C [7], D [8]
Weight	20 g
Reverse polarity protection	✔
Short-circuit protection	✔
Housing material	PC
Optics material	PC
Enclosure rating	IP 67
Ambient operating temperature	–20 °C ... +55 °C
Ambient storage temperature	–40 °C ... +75 °C

[1] +- 10 %.
[2] May not exceed or fall short of V_S tolerances.
[3] Signal transit time with resistive load.
[4] With light/dark ratio 1:1.
[5] Do not bend below 0 °C.
[6] A = V_S connections reverse-polarity protected.
[7] C = interference suppression.
[8] D = outputs overcurrent and short-circuit protected.

F

Ordering information

Other models available at www.mysick.com/en/W2_Flat

WT2 Flat

- **Sensor principle:** photoelectric proximity sensor
- **Detection principle:** energetic

Sensing range max. [1]	Output type	Switching mode	Connection	Connection diagram	Model name	Part no.
1 mm ... 9 mm	PNP	Light switching	Cable, 3-wire, 2 m, PVC	Cd-043	WT2F-P170	6030588
			Cable with connector M8, 3-pin, 200 mm, PVC	Cd-045	WT2F-P270	6030589
			Cable with connector M8, 4-pin, 200 mm, PVC	Cd-066	WT2F-P470	6030590
	NPN	Light switching	Cable, 3-wire, 2 m, PVC	Cd-043	WT2F-N170	6030587
2 mm ... 18 mm	PNP	Light switching	Cable, 3-wire, 2 m, PVC	Cd-043	WT2F-P140	6030584
			Cable with connector M8, 3-pin, 200 mm, PVC	Cd-045	WT2F-P240	6030585
			Cable with connector M8, 4-pin, 200 mm, PVC	Cd-066	WT2F-P440	6030586
	NPN	Light switching	Cable, 3-wire, 2 m, PVC	Cd-043	WT2F-N140	6030583
2 mm ... 34 mm	PNP	Light switching	Cable, 3-wire, 2 m, PVC	Cd-043	WT2F-P150	6030580
			Cable with connector M8, 3-pin, 200 mm, PVC	Cd-045	WT2F-P250	6030581
			Cable with connector M8, 4-pin, 200 mm, PVC	Cd-066	WT2F-P450	6030582
	NPN	Light switching	Cable, 3-wire, 2 m, PVC	Cd-043	WT2F-N150	6030576
		Dark-switching	Cable, 3-wire, 2 m, PVC	Cd-043	WT2F-E150	6043902
4 mm ... 115 mm	PNP	Light switching	Cable, 3-wire, 2 m, PVC	Cd-043	WT2F-P180	6030573
			Cable with connector M8, 3-pin, 200 mm, PVC	Cd-045	WT2F-P280	6030574
			Cable with connector M8, 4-pin, 200 mm, PVC	Cd-066	WT2F-P480	6030575
	NPN	Light switching	Cable, 3-wire, 2 m, PVC	Cd-043	WT2F-N180	6030572

[1] Object with 90 % reflectance (referred to standard white, DIN 5033)

WS/WE2 Flat

- **Sensor principle:** through-beam photoelectric sensor

Sensing range max.	Output type	Switching mode	Connection	Connection diagram	Model name	Part no.
0 m ... 0.5 m	PNP	Light switching	Cable, 3-wire, 2 m, PVC	Cd-049	WS/WE2F-P110	6049355
			Cable with connector M8, 3-pin, 200 mm, PVC	Cd-051	WS/WE2F-P210	6030566
		Dark-switching	Cable, 3-wire, 2 m, PVC	Cd-049	WS/WE2F-F110	6030569
			Cable with connector M8, 3-pin, 200 mm, PVC	Cd-051	WS/WE2F-F210	6030570
			Cable with connector M8, 4-pin, 200 mm, PVC	Cd-057	WS/WE2F-F410	6030571
	NPN	Light switching	Cable, 3-wire, 2 m, PVC	Cd-049	WS/WE2F-N110	6030540
		Dark-switching	Cable, 3-wire, 2 m, PVC	Cd-049	WS/WE2F-E110	6030554

Dimensional drawings

Dimensions in mm (inch)

WT2F

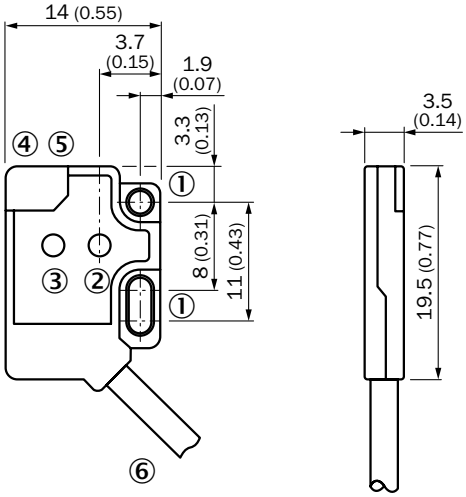

① Mounting holes, Ø 2.1 mm
② Optical axis, sender
③ Optical axis, receiver
④ LED indicator orange: switching output active
⑤ LED indicator green: strength indicator
⑥ Connection

F

WS/WE2F

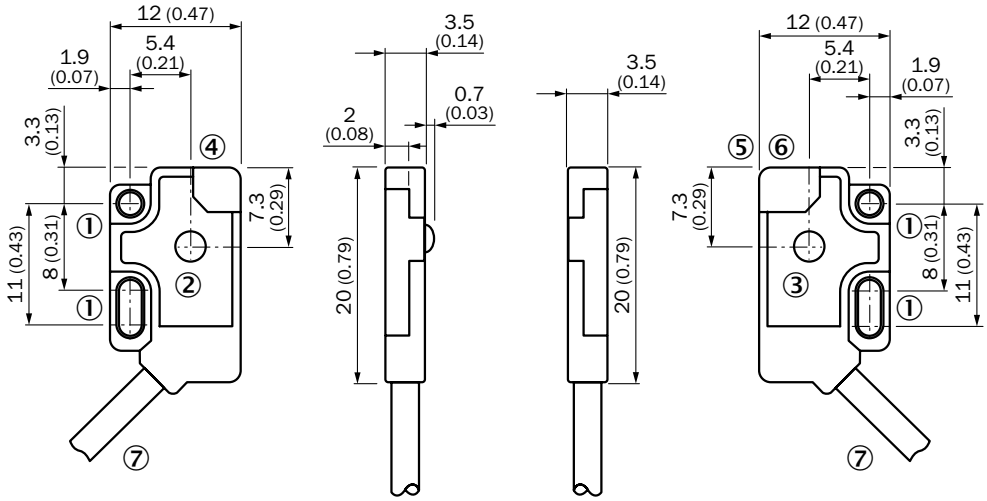

① Mounting holes, Ø 2.1 mm
② Optical axis, receiver
③ Optical axis, sender
④ LED indicator green
⑤ LED indicator orange
⑥ LED indicator green
⑦ Connection

Characteristic curves

Black-white shift

WT2F, 9 mm

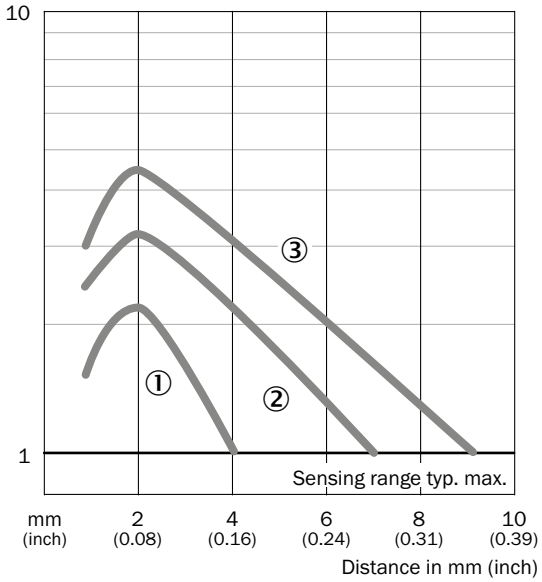

① Sensing range on black, 6 % remission
② Sensing range on gray, 18 % remission
③ Sensing range on white, 90 % remission

WT2F, 18 mm

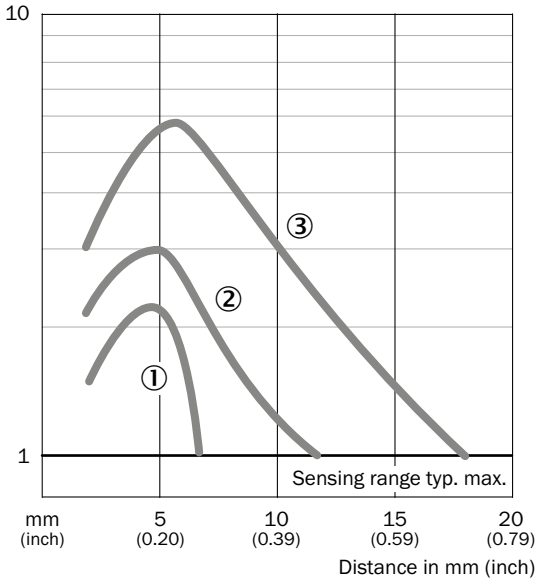

① Sensing range on black, 6 % remission
② Sensing range on gray, 18 % remission
③ Sensing range on white, 90 % remission

F

WT2F, 34 mm

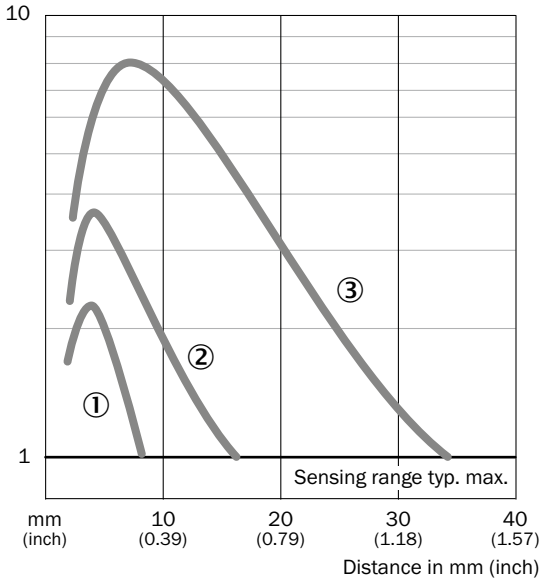

① Sensing range on black, 6 % remission
② Sensing range on gray, 18 % remission
③ Sensing range on white, 90 % remission

WT2F, 115 mm

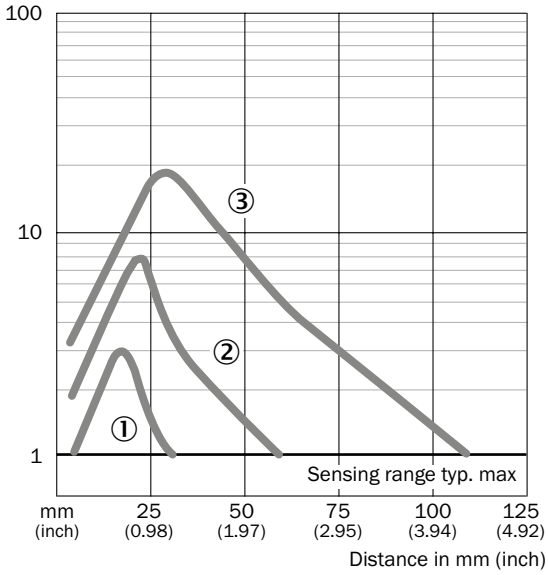

① Sensing range on black, 6 % remission
② Sensing range on gray, 18 % remission
③ Sensing range on white, 90 % remission

Operating reserve

WS/WE2F

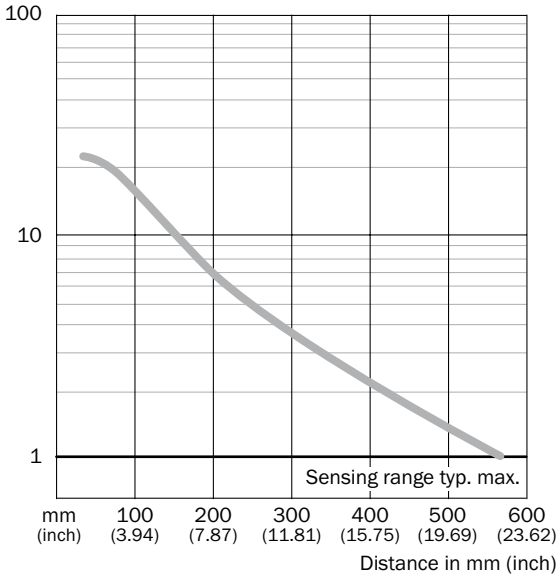

Bar diagrams

WT2F, 9 mm

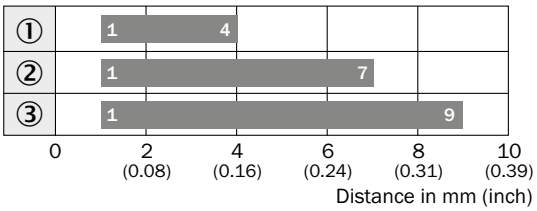

Sensing range

① Sensing range on black, 6 % remission
② Sensing range on gray, 18 % remission
③ Sensing range on white, 90 % remission

WT2F, 18 mm

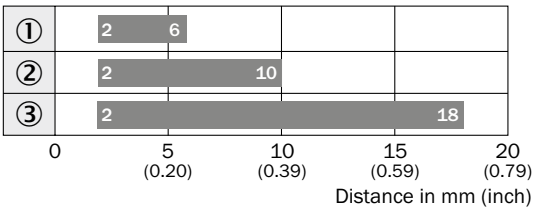

Sensing range

① Sensing range on black, 6 % remission
② Sensing range on gray, 18 % remission
③ Sensing range on white, 90 % remission

WT2F, 34 mm

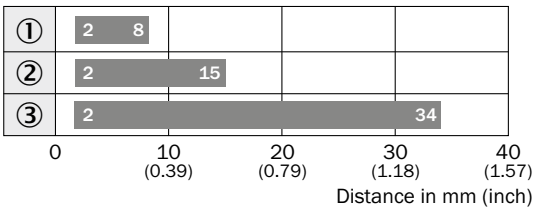

Sensing range

① Sensing range on black, 6 % remission
② Sensing range on gray, 18 % remission
③ Sensing range on white, 90 % remission

WT2F, 115 mm

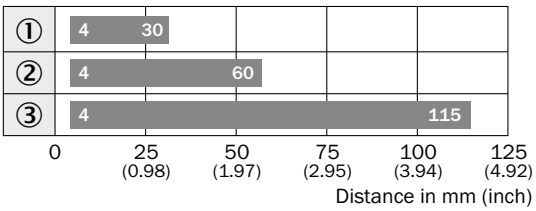

Sensing range

① Sensing range on black, 6 % remission
② Sensing range on gray, 18 % remission
③ Sensing range on white, 90 % remission

WS/WE2F

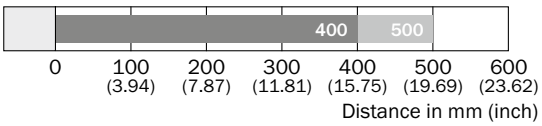

Sensing range Sensing range typ. max.

F

Connection diagram

Cd-043

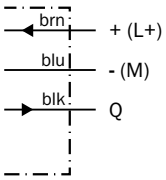

Cd-045

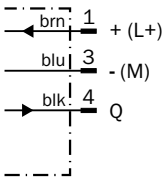

Cd-049

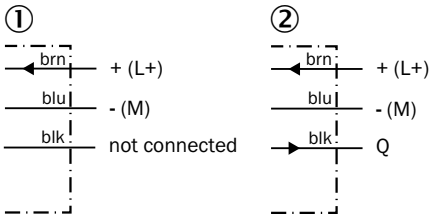

① Sender
② Receiver

Cd-051

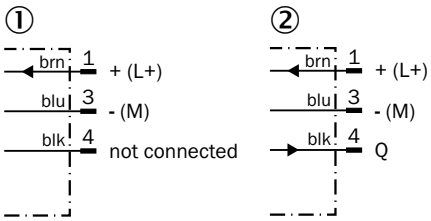

① Sender
② Receiver

Cd-057

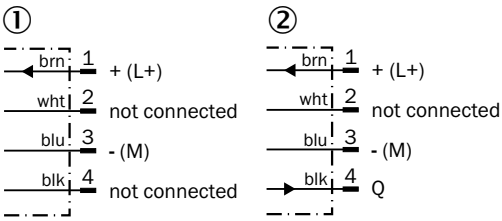

① Sender
② Receiver

Cd-066

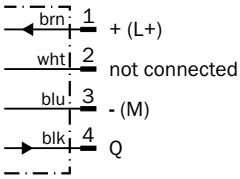

F

Recommended accessories

Plug connectors and cables

Connecting cable (female connector-open)

- **Cable material:** PVC
- **Connector material:** TPU

Figure	Connection type head A	Connection type head B	Connecting cable	Enclosure rating	Model name	Part no.
	Female connector, M8, 3-pin, straight	Cable, open conductor heads	2 m, 3-wire	IP 67	DOL-0803-G02M	6010785
			5 m, 3-wire	IP 67	DOL-0803-G05M	6022009
	Female connector, M8, 3-pin, angled	Cable, open conductor heads	2 m, 3-wire	IP 67	DOL-0803-W02M	6008489
			5 m, 3-wire	IP 67	DOL-0803-W05M	6022010
	Female connector, M8, 4-pin, straight	Cable, open conductor heads	2 m, 4-wire	IP 67	DOL-0804-G02M	6009870
			5 m, 4-wire	IP 67	DOL-0804-G05M	6009872
	Female connector, M8, 4-pin, angled	Cable, open conductor heads	2 m, 4-wire	IP 67	DOL-0804-W02M	6009871
			5 m, 4-wire	IP 67	DOL-0804-W05M	6009873

Female connector (ready to assemble)

Figure	Connection type head A	Connection type head B	Connector material	Enclosure rating	Model name	Part no.
	Female connector, M8, 3-pin, straight	Screw-type terminals	PBT	IP 67	DOS-0803-G	7902077
	Female connector, M8, 3-pin, angled	Pin penetration	PBT	IP 67	DOS-0803-W	7902078
	Female connector, M8, 4-pin, straight	Screw-type terminals	PBT	IP 67	DOS-0804-G	6009974
	Female connector, M8, 4-pin, angled	Pin penetration	PBT	IP 67	DOS-0804-W	6009975

Male connector (ready to assemble)

Figure	Connection type head A	Connection type head B	Connector material	Enclosure rating	Model name	Part no.
	Male connector, M8, 3-pin, straight	Screw-type terminals	PBT	IP 67	STE-0803-G	6037322
	Male connector, M8, 4-pin, straight	Screw-type terminals	PBT	IP 67	STE-0804-G	6037323

→ **For additional accessories, please see page L-861**

F

Incredibly small, yet powerful

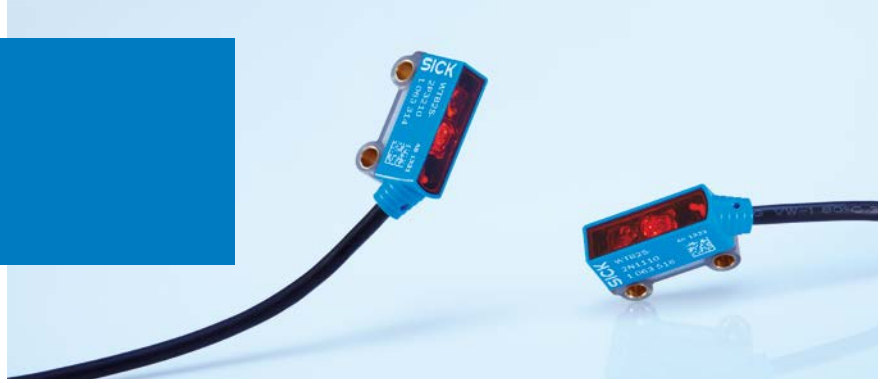

F

Product description

Developing lighter, more compact and more intelligent machines. The incredibly small, new-generation W2S-2 miniature photoelectric sensor offers completely new machine design possibilities. Intelligent features: the sensors feature background suppression that enables detection of black objects with a degree of reflection of 1%. The W2S-2 also offers world-class sensing distances in this housing size.

Whether it is used in machines in the pharmaceutical industry, in logistics handling applications or in automatic assembly equipment, the ultra-compact W2S-2 offers optimal performance and high reliability in industrial environments. The latest automation innovation is already on board: both the sensing range as well as continuous monitoring are set via the controller. The W2S-2 reduces the load on the machine control by using a counter, timestamp and false tripping suppression functions.

Programmable sensors, adjustable via a 3-turn potentiometer, and sensors with fixed sensing distances of 15 mm, 30 mm, 45 mm and 60 mm are also available.

At a glance

- Sensor with background suppression and without any significant black/white shift
- PinPoint 2.0 LED with extended sensing distances and high operating reserves
- Clearly-defined laser-like or line-shaped light spots
- Detection of highly-transparent and reflective objects using sensors with V-optics
- Photoelectric retro-reflective sensor with autocollimation

Your benefits

- Machine design flexibility: the ultra-compact sensors offer above-average sensing distances and provide space-saving installation
- Remote setup: sensors installed in confined spaces can be set and monitored remotely via IO-Link.
- High operational reliability: black objects are detected with a degree of reflection of 1%
- Maximum reliability during object detection
- Quick and easy commissioning: the photoelectric retro-reflective sensor with autocollimation provides a clearly visible light spot for high process reliability
- Universal application options: wide range of models enclosed in a rugged housing

→ **www.mysick.com/en/W2S-2**

For more information, just enter the link or scan the QR code and get direct access to technical data, CAD design models, operating instructions, software, application examples and much more.

Additional information

Detailed technical data

Features

	WTB2S-2	WTV2S-2	WL2S-2	WSE2S-2
Sensor principle	Photoelectric proximity sensor		Photoelectric retro-reflective sensor	Through-beam photo-electric sensor
Detection principle	Background suppression		Autocollimation	–
Dimensions (W x H x D)	7.7 mm x 21.8 mm x 13.5 mm 7.7 mm x 27.5 mm x 13.5 mm (depending on type)	7.7 mm x 21.8 mm x 13.5 mm		
Housing design (light emission)	Rectangular			
Sensing range max.	1 mm ... 150 mm [1] (depending on type)	1 mm ... 36 mm [1]	0 m ... 1.2 m [2]	0 m ... 2.5 m
Sensing range	3 mm ... 110 mm [1] (depending on type)	4 mm ... 30 mm [1]	0 m ... 0.55 m [2]	0 m ... 2 m
Type of light	Visible red light			
Light source [3]	PinPoint LED			
Wave length	640 nm			
Adjustment	Cable / potentiometer, 3 turns (depending on type)	–		
Special feature	Line-shaped light spot (depending on type)	–		

[1] Object with 90 % reflectance (referred to standard white, DIN 5033)

[2] P250F.

[3] Average service life of 100,000 h at T_A = +25 °C.

F

Mechanics/electronics

	WTB2S-2	WTV2S-2	WL2S-2	WSE2S-2
Supply voltage [1]	10 V DC ... 30 V DC			
Ripple [2]	≤ 5 V_{pp}			
Power consumption [3]	≤ 20 mA			
Output type	PNP / NPN [4] (depending on type)			
Switching mode	Light switching / Dark-switching / Light/dark-switching [4] (depending on type)			
Output current $I_{max.}$	< 50 mA			
Response time [5]	< 0.4 ms / < 0.5 ms (depending on type)	< 0.4 ms	< 0.5 ms	< 0.4 ms
Switching frequency [6] [7]	1,000 Hz / 1,200 Hz (depending on type)	1,200 Hz	1,000 Hz	1,200 Hz
Connection type	Cable, 2 m [8] / Cable with connector, M8, 200 mm [8] (depending on type)			
Circuit protection	A [9], B [10], D [11]			
Polarisation filter	–		✔	–
IO-Link	– / ✔ (COM2) (depending on type)	–	–	
Housing material	ABS/PC			

	WTB2S-2	WTV2S-2	WL2S-2	WSE2S-2
Optics material	PMMA			
Enclosure rating	IP 67			
Ambient operating temperature	–20 °C ... +50 °C			
Ambient storage temperature	–40 °C ... +75 °C			

[1] Limit values.
[2] May not exceed or fall short of V_S tolerances.
[3] Without load.
[4] Parametrisable via IO-Link.
[5] Signal transit time with resistive load.
[6] With light/dark ratio 1:1.
[7] With light/dark ratio 1:1 in switching mode. Different values possible in COM2 mode.
[8] Do not bend below 0 °C.
[9] A = V_S connections reverse-polarity protected.
[10] B = output reverse-polarity protected.
[11] D = outputs overcurrent and short-circuit protected.

Ordering information

Other models available at www.mysick.com/en/W2S-2

WTB2S-2

- **Sensor principle:** photoelectric proximity sensor
- **Detection principle:** background suppression

Sensing range max.[1]	Light spot size (distance)	Adjust-ment	Output type	Switching mode	Connection	Connection diagram	Model name	Part no.
1 mm ... 18 mm	Ø 2 mm (8 mm)	–	PNP	Light switching	Cable, 3-wire, 2 m	Cd-044	WTB2S-2P1310	1064393
					Cable with connector M8, 3-pin, 200 mm	Cd-045	WTB2S-2P3110	1064395
				Dark-switching	Cable, 3-wire, 2 m	Cd-044	WTB2S-2F1310	1064394
					Cable with connector M8, 3-pin, 200 mm	Cd-045	WTB2S-2F3110	1064396
				Light/dark-switching	Cable with connector M8, 4-pin, 200 mm	Cd-084	WTB2S-2P3210	1063314
			NPN	Light switching	Cable, 3-wire, 2 m	Cd-044	WTB2S-2N1310	1064249
				Dark-switching	Cable, 3-wire, 2 m	Cd-044	WTB2S-2E1310	1064397
1 mm ... 36 mm	Ø 3 mm (15 mm)	–	PNP	Light switching	Cable, 3-wire, 2 m	Cd-044	WTB2S-2P1330	1064573
					Cable with connector M8, 3-pin, 200 mm	Cd-045	WTB2S-2P3130	1064575
				Dark-switching	Cable, 3-wire, 2 m	Cd-044	WTB2S-2F1330	1064574
					Cable with connector M8, 3-pin, 200 mm	Cd-045	WTB2S-2F3130	1064576
				Light/dark-switching	Cable with connector M8, 4-pin, 200 mm	Cd-084	WTB2S-2P3230	1063517
			NPN	Light switching	Cable, 3-wire, 2 m	Cd-044	WTB2S-2N1330	1064578
				Dark-switching	Cable, 3-wire, 2 m	Cd-044	WTB2S-2E1330	1064580
				Light/dark-switching	Cable, 4-wire, 2 m	Cd-095	WTB2S-2N1130	1063321
					Cable with connector M8, 4-pin, 200 mm	Cd-084	WTB2S-2N3230	1064581

[1] Object with 90 % reflectance (referred to standard white, DIN 5033).

Sensing range max.[1]	Light spot size (distance)	Adjust-ment	Output type	Switching mode	Connection	Connection diagram	Model name	Part no.
1 mm ... 66 mm	Ø 4.5 mm (40 mm)	–	PNP	Light switching	Cable, 3-wire, 2 m	Cd-044	WTB2S-2P1360	1064605
					Cable with connector M8, 3-pin, 200 mm	Cd-045	WTB2S-2P3160	1064607
				Dark-switching	Cable, 3-wire, 2 m	Cd-044	WTB2S-2F1360	1064606
					Cable with connector M8, 3-pin, 200 mm	Cd-045	WTB2S-2F3160	1064608
				Light/dark-switching	Cable with connector M8, 4-pin, 200 mm	Cd-084	WTB2S-2P3260	1063545
			NPN	Light switching	Cable, 3-wire, 2 m	Cd-044	WTB2S-2N1360	1064609
4 mm ... 110 mm	Ø 4.4 mm (100 mm)	Cable	PNP	Light switching	Cable, 4-wire, 2 m	Cd-093	WTB2S-2P1145	1064614
					Cable with connector M8, 4-pin, 200 mm	Cd-092	WTB2S-2P3245	1064615
			NPN	Light switching	Cable, 4-wire, 2 m	Cd-093	WTB2S-2N1145	1063552
1 mm ... 150 mm	Ø 3.5 mm (50 mm)	Potenti-ometer, 3 turns	PNP	Light/dark-switching	Cable, 4-wire, 2 m	Cd-095	WTB2S-2P1151	1066110
					Cable with connector M8, 4-pin, 200 mm	Cd-084	WTB2S-2P3251	1066111
			NPN	Light/dark-switching	Cable, 4-wire, 2 m	Cd-095	WTB2S-2N1151	1066113
					Cable with connector M8, 4-pin, 200 mm	Cd-084	WTB2S-2N3251	1066114

[1] Object with 90 % reflectance (referred to standard white, DIN 5033).

F

WTB2S-2, line-shaped light spot

- **Sensor principle:** photoelectric proximity sensor
- **Detection principle:** background suppression
- **Switching frequency:** 1,000 Hz (with light/dark ratio 1:1 in switching mode. Different values possible in COM2 mode.)

Sensing range max.[1]	Light spot size (distance)	Adjust-ment	Output type	Switching mode	Connection	Connection diagram	Model name	Part no.
4 mm ... 90 mm	2.2 mm x 9 mm (45 mm)	Cable	NPN	Light switching	Cable, 4-wire, 2 m	Cd-093	WTB2S-2P1175	1064621
			PNP	Light switching	Cable with connector M8, 4-pin, 200 mm	Cd-092	WTB2S-2P3275	1064620

[1] Object with 90 % reflectance (referred to standard white, DIN 5033).

WTB2S-2, IO-Link

- **Sensor principle:** photoelectric proximity sensor
- **Detection principle:** background suppression
- **Switching mode:** light switching (Parametrisable via IO-Link.)
- **Switching frequency:** 1,000 Hz (with light/dark ratio 1:1 in switching mode. Different values possible in COM2 mode.)

Sensing range max.[1]	Light spot size (distance)	Adjust-ment	Output type	IO-Link	Connection	Connection diagram	Model name	Part no.
4 mm ... 110 mm	Ø 4.4 mm (60 mm)	Cable	PNP	Standard functions	Cable with connector M8, 4-pin, 200 mm	Cd-098	WTB2SC-2P3244	1063550

[1] Object with 90 % reflectance (referred to standard white, DIN 5033).

WTB2S-2, IO-Link, line-shaped light spot

- **Sensor principle:** photoelectric proximity sensor
- **Detection principle:** background suppression
- **Switching mode:** light switching (Parametrisable via IO-Link.)
- **Switching frequency:** 1,000 Hz (with light/dark ratio 1:1 in switching mode. Different values possible in COM2 mode.)

Sensing range max.[1]	Light spot size (distance)	Adjust-ment	Output type	IO-Link	Connection	Connection diagram	Model name	Part no.
4 mm ... 90 mm	2.2 mm x 9 mm (45 mm)	Cable	PNP	Standard functions	Cable with connector M8, 4-pin, 200 mm	Cd-098	WTB2SC-2P3274	1063646

[1] Object with 90 % reflectance (referred to standard white, DIN 5033).

WTV2S-2, V-optics

- **Sensor principle:** photoelectric proximity sensor
- **Detection principle:** background suppression
- **Switching frequency:** 1,200 Hz (With light/dark ratio 1:1.)

Sensing range max.[1]	Light spot size (distance)	Output type	Switching mode	Connection	Connection diagram	Model name	Part no.
1 mm ... 36 mm	Ø 2 mm (15 mm)	PNP	Light switching	Cable, 3-wire, 2 m	Cd-044	WTV2S-2P1320	1064660
				Cable with connector M8, 3-pin, 200 mm	Cd-045	WTV2S-2P3120	1064662
			Light/dark-switching	Cable with connector M8, 4-pin, 200 mm	Cd-084	WTV2S-2P3220	1064661

[1] Object with 90 % reflectance (referred to standard white, DIN 5033).

F

WL2S-2

- **Sensor principle:** photoelectric retro-reflective sensor
- **Detection principle:** autocollimation
- **Switching frequency:** 1,000 Hz (With light/dark ratio 1:1.)

Sensing range max.[1]	Light spot size (distance)	Output type	Switching mode	Connection	Connection diagram	Model name	Part no.
0 m ... 1.2 m	Ø 12 mm (250 mm)	PNP	Light switching	Cable, 3-wire, 2 m	Cd-044	WL2S-2P1330	1064590
				Cable with connector M8, 3-pin, 200 mm	Cd-045	WL2S-2P3130	1064592
			Dark-switching	Cable, 3-wire, 2 m	Cd-044	WL2S-2F1330	1064591
				Cable with connector M8, 3-pin, 200 mm	Cd-045	WL2S-2F3130	1064593
			Light/dark-switching	Cable with connector M8, 4-pin, 200 mm	Cd-084	WL2S-2P3230	1063572
				Cable with connector M8, 4-pin, 200 mm	Cd-110	WL2S-2K3230 2)	1064594
		NPN	Light switching	Cable, 3-wire, 2 m	Cd-044	WL2S-2N1330	1064595
			Dark-switching	Cable, 3-wire, 2 m	Cd-044	WL2S-2E1330	1064596
			Light/dark-switching	Cable, 4-wire, 2 m	Cd-095	WL2S-2N1130	1063571

[1] P250F.

[2] Pin 2 and 4 swapped.

WSE2S-2

- **Sensor principle:** through-beam photoelectric sensor
- **Switching frequency:** 1,200 Hz (With light/dark ratio 1:1.)

Sensing range max.	Light spot size (distance)	Output type	Switching mode	Connection	Connection diagram	Model name	Part no.
0 m ... 2.5 m	Ø 65 mm (1,500 mm)	PNP	Light switching	Cable, 3-wire, 2 m	Cd-049	WSE2S-2P1330	1065940
				Cable with connector M8, 3-pin, 200 mm	Cd-051	WSE2S-2P3130	1063521
			Dark-switching	Cable, 3-wire, 2 m	Cd-049	WSE2S-2F1330	1965941
				Cable with connector M8, 3-pin, 200 mm	Cd-051	WSE2S-2F3130	1063523
			Light/dark-switching	Cable with connector M8, 4-pin, 200 mm	Cd-085	WSE2S-2P3230	1063650
		NPN	Light switching	Cable, 3-wire, 2 m	Cd-049	WSE2S-2N1330	1064584
			Dark-switching	Cable, 3-wire, 2 m	Cd-049	WSE2S-2E1330	1064586
				Cable with connector M8, 3-pin, 200 mm	Cd-051	WSE2S-2E3130	1064588
			Light/dark-switching	Cable, 4-wire, 2 m	Cd-085	WSE2S-2N1130	1063660

Dimensional drawings

Dimensions in mm (inch)

WTB2S-2, 15 mm, 30 mm, WTV2S-2

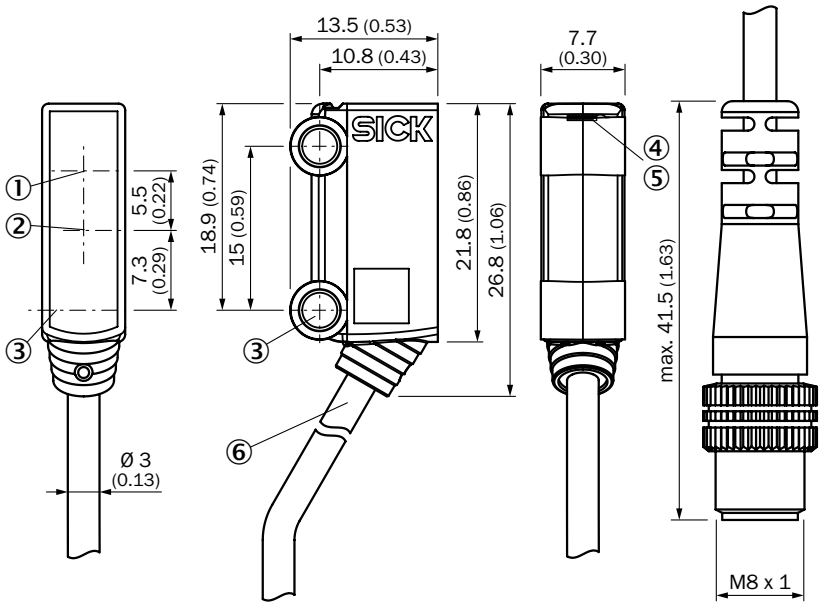

① Optical axis receiver
② Optical axis sender
③ Mounting hole, Ø 3.2 mm
④ Status indicator LED green: power on
⑤ Status indicator LED, yellow: Status of received light beam
⑥ Connection

F

WTB2S-2, 60 mm, 80 mm

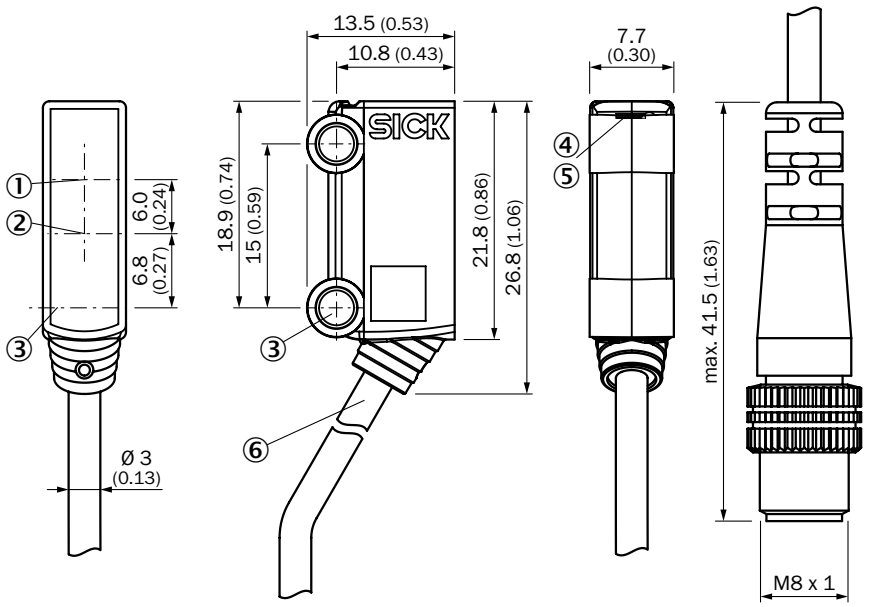

① Optical axis, receiver
② Optical axis, sender
③ Middle axis fixing hole Ø 3.2 mm
④ Status indicator LED green: power on
⑤ Status indicator LED, yellow:
Status of received light beam
⑥ Connection

F

WTB2S-2, 150 mm

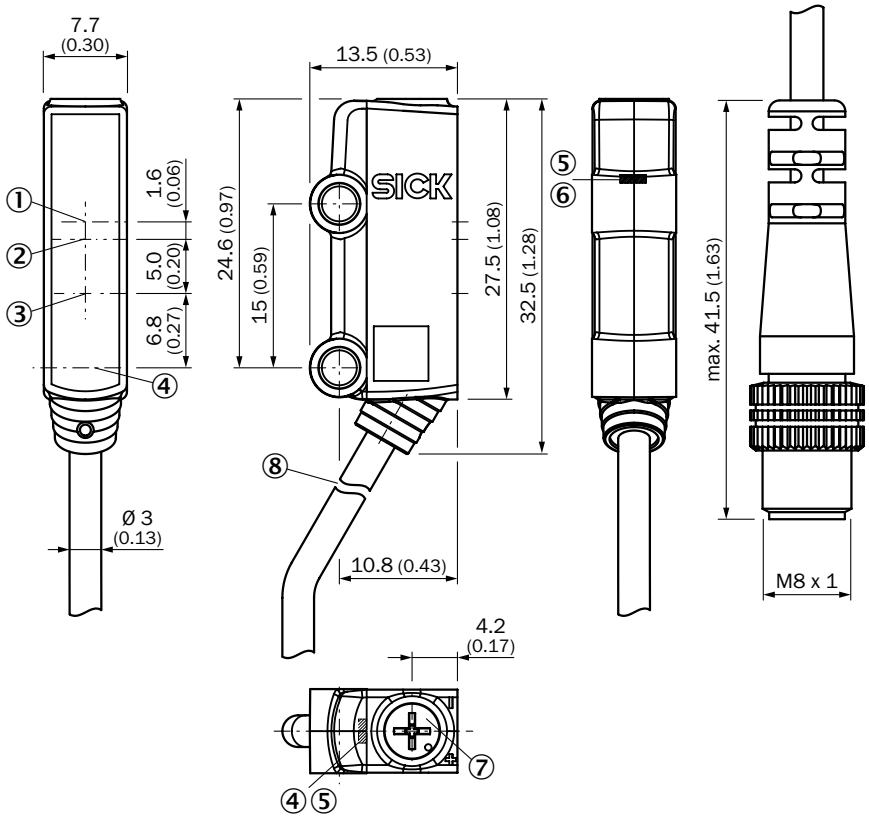

① Optical axis, receiver (sensing range min.)
② Optical axis, receiver (sensing range max.)
③ Optical axis, sender
④ Fixing hole ø 3.2 mm
⑤ Status indicator LED green: power on
⑥ Status indicator LED, yellow:
Status of received light beam
⑦ Sensing range adjustment:
potentiometer, 3 turns
⑧ Connection

WL2S-2

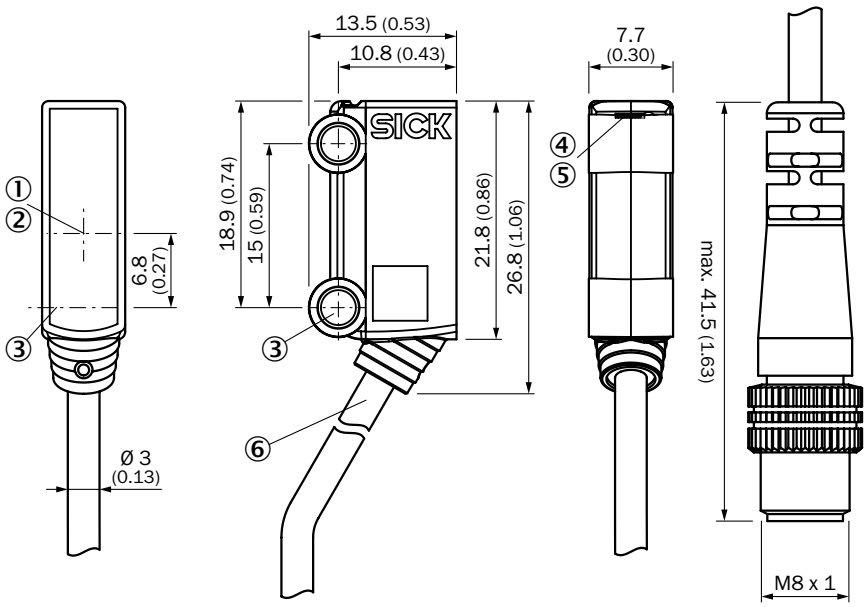

① Optical axis, receiver
② Optical axis, sender
③ Middle axis fixing hole Ø 3.2 mm
④ Status indicator LED green: power on
⑤ Status indicator LED, yellow:
Status of received light beam
⑥ Connection

WSE2S-2

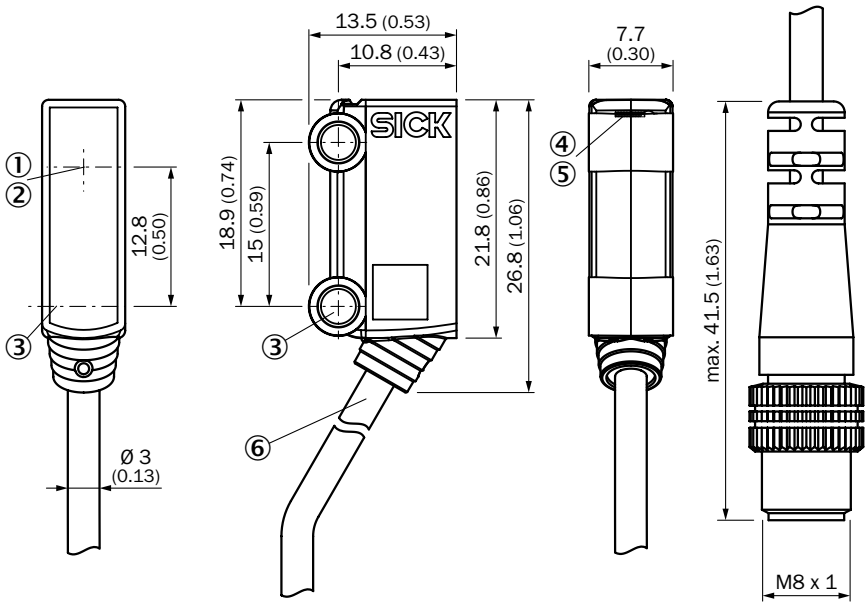

① Optical axis, receiver
② Optical axis, sender
③ Middle axis fixing hole Ø 3.2 mm
④ LED indicator green: power on
⑤ Status indicator LED, yellow:
Status of received light beam
⑥ Connection

F

Characteristic curves

Black-white shift

WTB2S-2, 110 mm

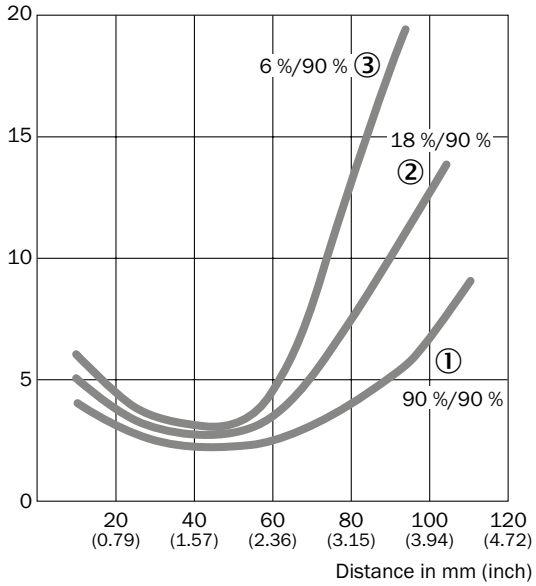

① Sensing range on white, 90 % remission
② Sensing range on gray, 18 % remission
③ Sensing range on black, 6 % remission

WTB2S-2, 90 mm, line-shaped light spot

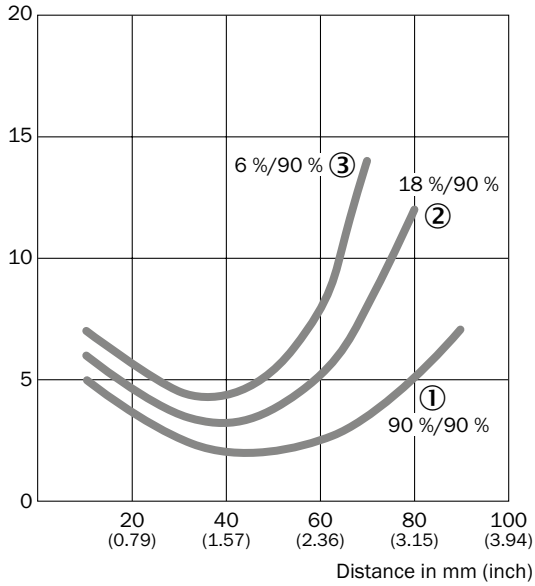

① Sensing range on white, 90 % remission
② Sensing range on gray, 18 % remission
③ Sensing range on black, 6 % remission

F

WTB2S-2, 150 mm

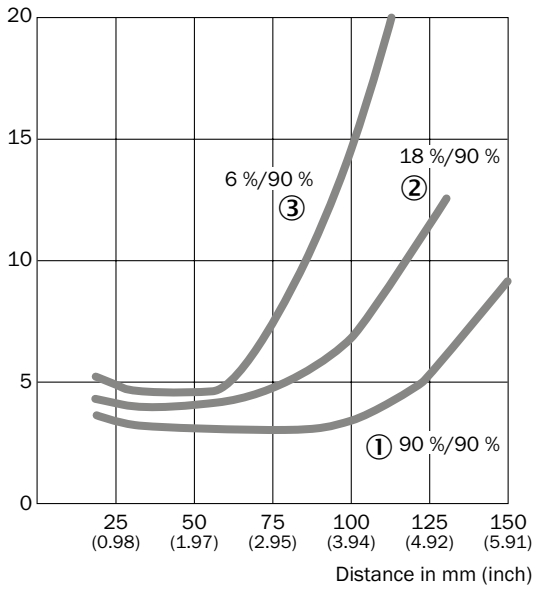

① Sensing range on white, 90 % remission
② Sensing range on gray, 18 % remission
③ Sensing range on black, 6 % remission

WL2S-2

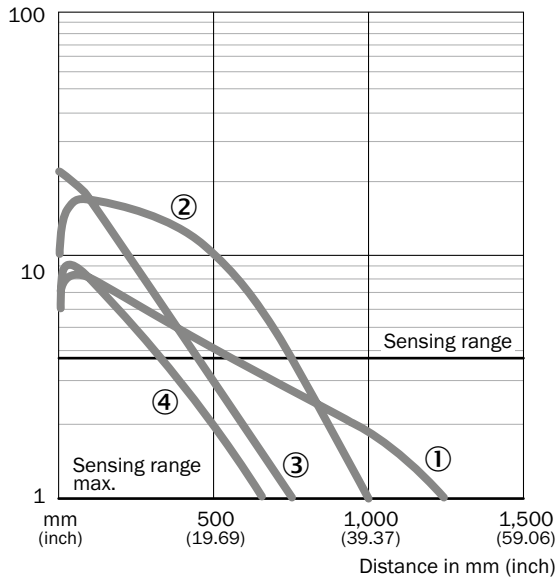

① P250F
② PL20A
③ REF-AC1000
④ PL10F

Operating reserve

WL2S-2

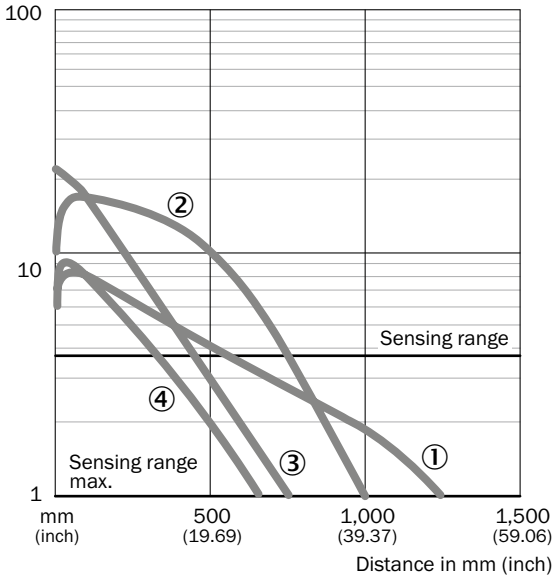

WSE2S-2

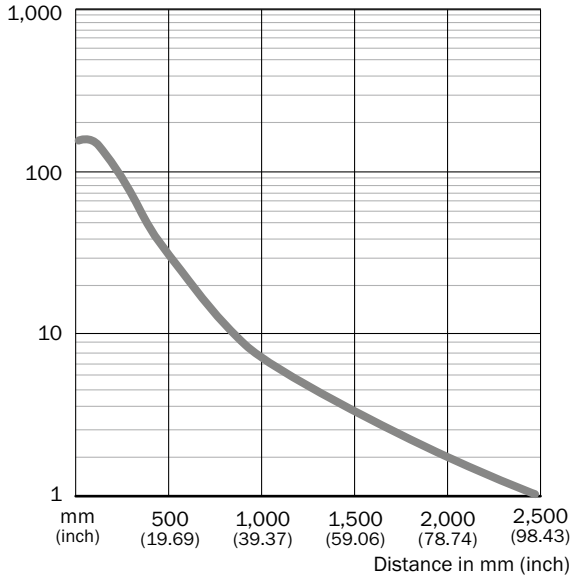

① P250F
② PL20A
③ REF-AC1000
④ PL10F

F

Bar diagrams

WTB2S-2, 15 mm

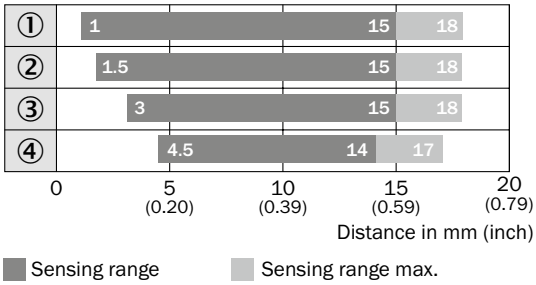

① Sensing range on white, 90 % remission
② Sensing range on gray, 18 % remission
③ Sensing range on black, 6 % remission
④ Sensing range on ultrablack, 1 % remission

WTB2S-2, 30 mm

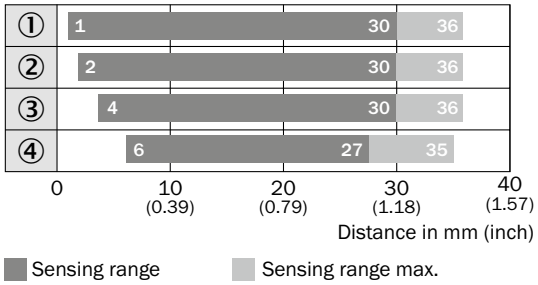

① Sensing range on white, 90 % remission
② Sensing range on gray, 18 % remission
③ Sensing range on black, 6 % remission
④ Sensing range on ultrablack, 1 % remission

WTB2S-2, 60 mm

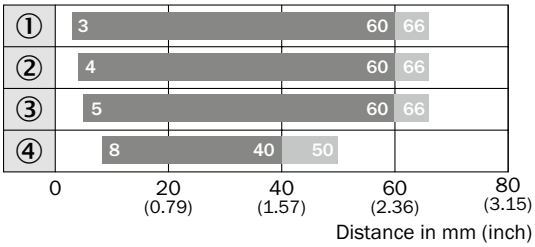

Sensing range Sensing range max.

① Sensing range on white, 90 % remission
② Sensing range on gray, 18 % remission
③ Sensing range on black, 6 % remission
④ Sensing range on ultrablack, 1 % remission

WTB2S-2, 110 mm

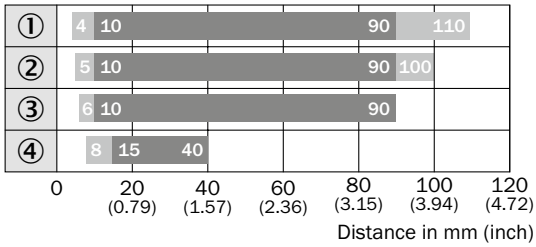

Sensing range Sensing range max.

① Sensing range on white, 90 % remission
② Sensing range on gray, 18 % remission
③ Sensing range on black, 6 % remission
④ Sensing range on ultrablack, 1 % remission

WTB2S-2, 90 mm, line-shaped light spot

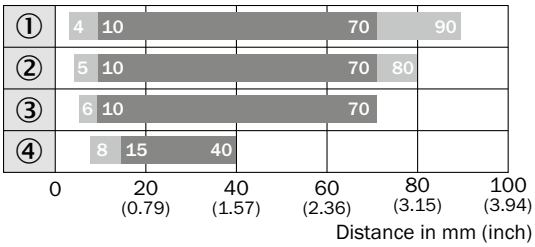

Sensing range Sensing range max.

① Sensing range on white, 90 % remission
② Sensing range on gray, 18 % remission
③ Sensing range on black, 6 % remission
④ Sensing range on ultrablack, 1 % remission

WTB2S-2, 150 mm

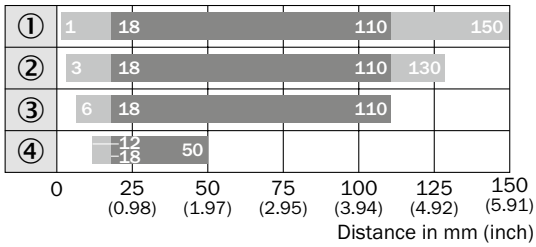

Sensing range Sensing range max.

① Sensing range on white, 90 % remission
② Sensing range on gray, 18 % remission
③ Sensing range on black, 6 % remission
④ Sensing range on ultrablack, 1 % remission

WL2S-2

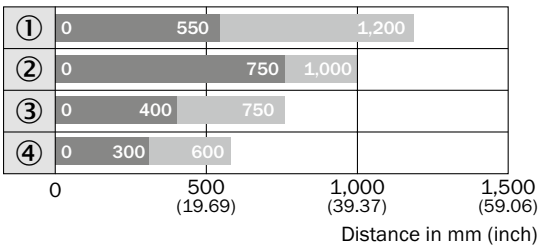

Sensing range Sensing range max.

① P250F
② PL20A
③ REF-AC1000
④ PL10F

WSE2S-2

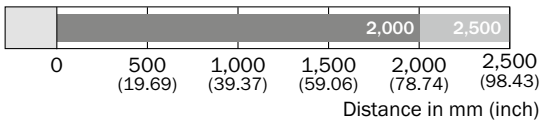

Sensing range Sensing range max.

F

Light spot diameter

WTB2S-2, 15 mm

Spot diameter in mm (inch)

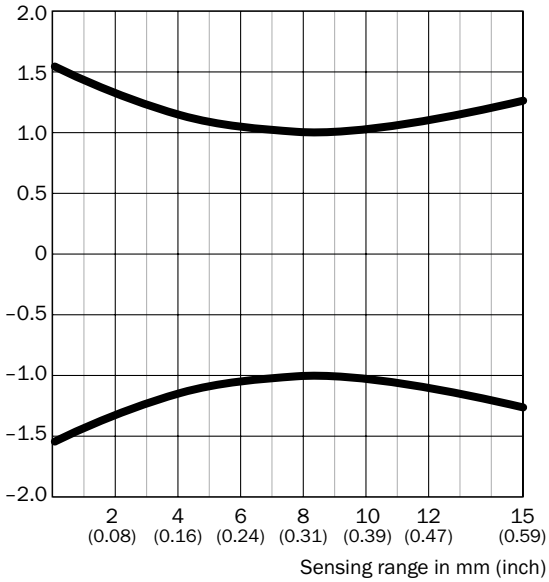

WTB2S-2, 30 mm

Spot diameter in mm (inch)

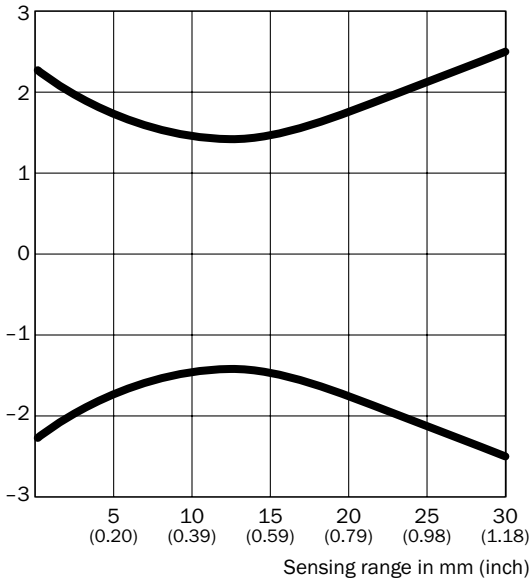

WTB2S-2, 60 mm

Spot diameter in mm (inch)

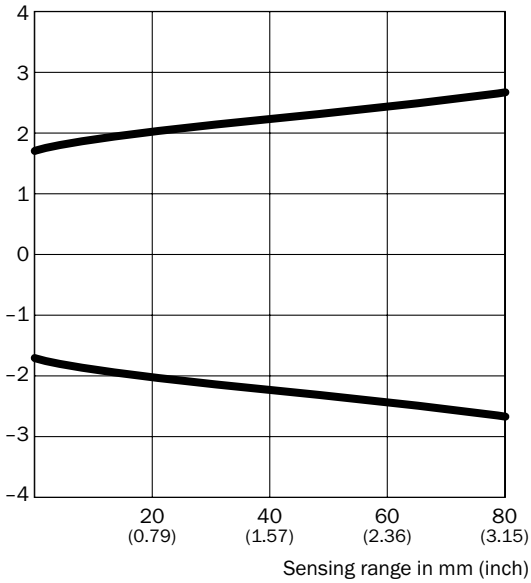

WTB2S-2, 110 mm

Spot diameter in mm (inch)

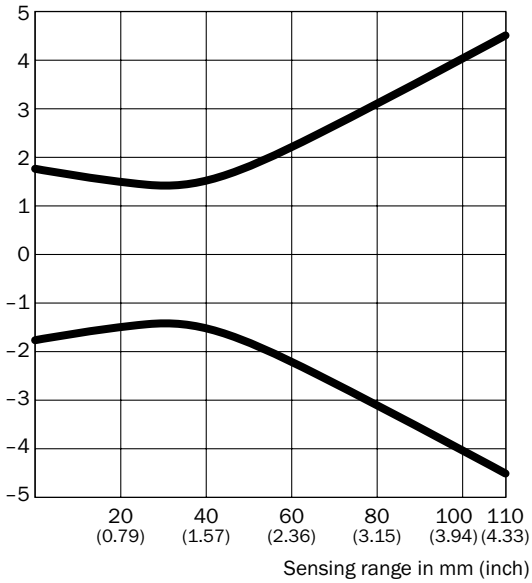

F

WTB2S-2, 90 mm, line-shaped light spot

Spot diameter in mm (inch)

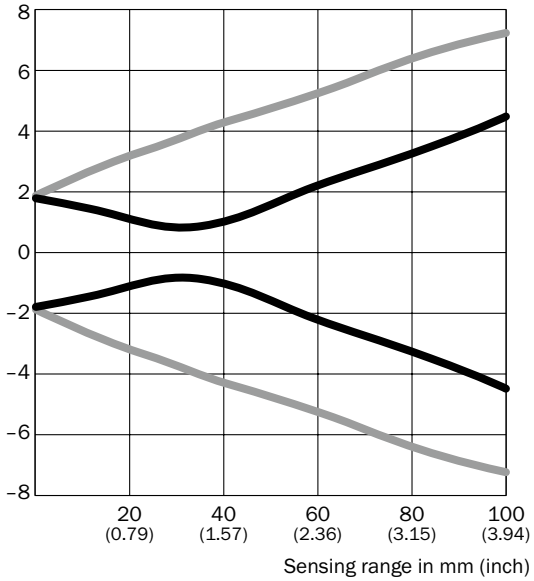

Vertical
Horizontal

WTB2S-2, 150 mm

Spot diameter in mm (inch)

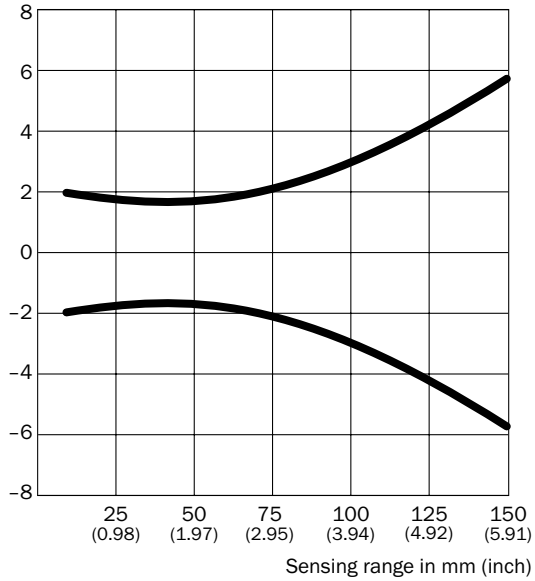

F

WTV2S-2

Spot diameter in mm (inch)

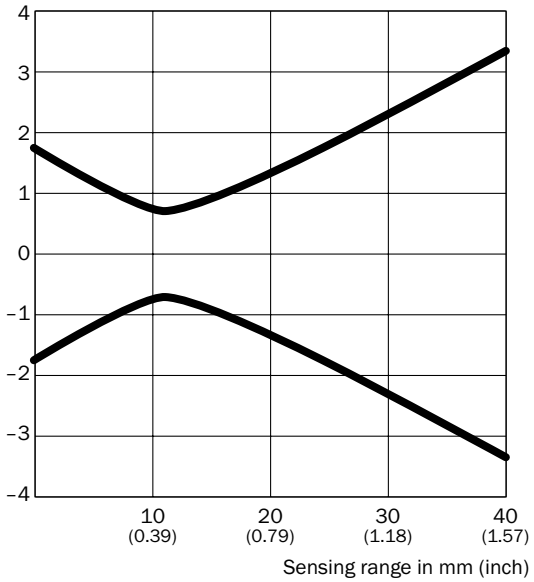

WL2S-2

Spot diameter in mm (inch)

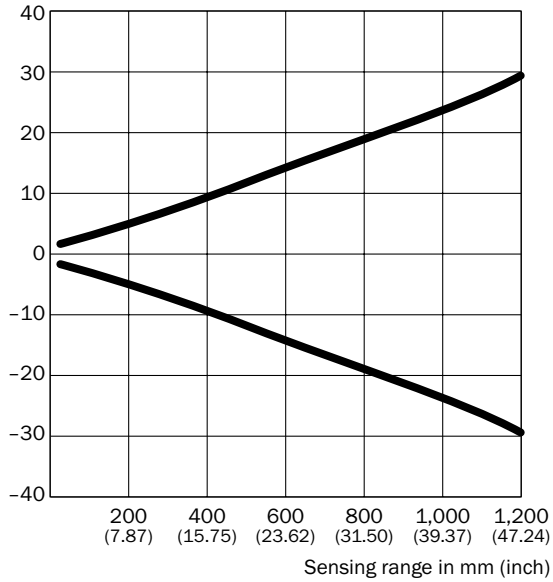

WSE2S-2

Spot diameter in mm (inch)

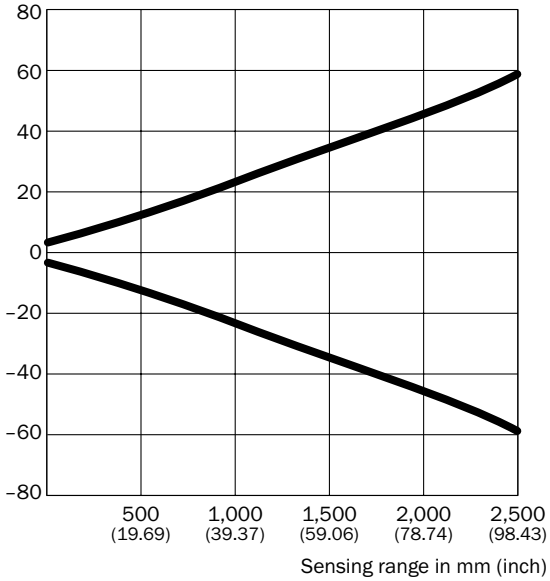

Connection diagram

Cd-044

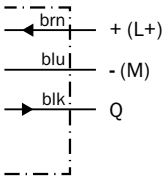

Cd-045

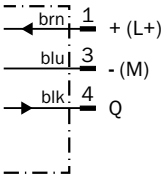

Cd-049

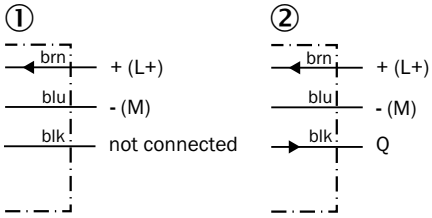

① Sender
② Receiver

Cd-051

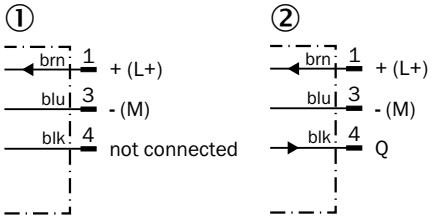

① Sender
② Receiver

Cd-084

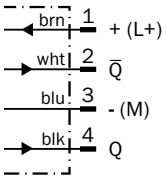

F

Cd-085

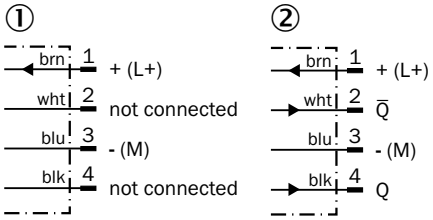

① Sender
② Receiver

Cd-092

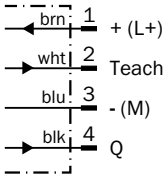

Cd-093

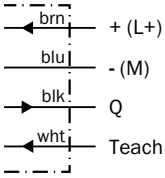

Cd-095

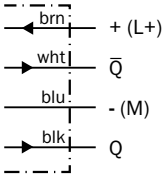

Cd-098

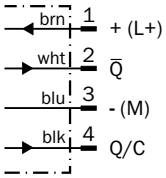

Cd-110

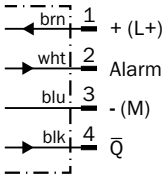

F

Light spot size

WTB2S-2, 90 mm, line-shaped light spot

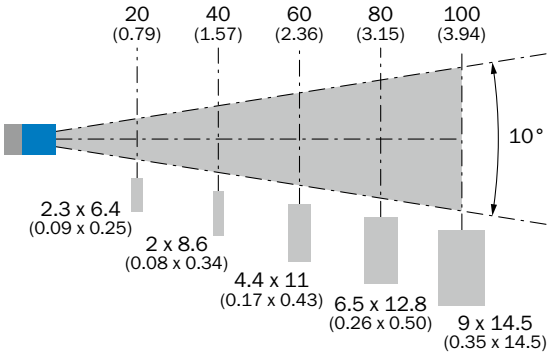

Recommended accessories

Plug connectors and cables

Connecting cable (female connector-open)M8, 3-pin, PVC

- **Cable material:** PVC
- **Connector material:** TPU

Figure	Connection type head A	Connection type head B	Connecting cable	Enclosure rating	Model name	Part no.
	Female connector, M8, 3-pin, straight	Cable, open conductor heads	2 m, 3-wire	IP 67	DOL-0803-G02M	6010785
			5 m, 3-wire	IP 67	DOL-0803-G05M	6022009
	Female connector, M8, 3-pin, angled	Cable, open conductor heads	2 m, 3-wire	IP 67	DOL-0803-W02M	6008489
			5 m, 3-wire	IP 67	DOL-0803-W05M	6022010
	Female connector, M8, 4-pin, straight	Cable, open conductor heads	2 m, 4-wire	IP 67	DOL-0804-G02M	6009870
			5 m, 4-wire	IP 67	DOL-0804-G05M	6009872
	Female connector, M8, 4-pin, angled	Cable, open conductor heads	2 m, 4-wire	IP 67	DOL-0804-W02M	6009871
			5 m, 4-wire	IP 67	DOL-0804-W05M	6009873

Reflectors

Angular

Figure	Material	Description	Model name	Part no.
	PMMA/ABS	Rectangular, screw connection, 47 mm x 47 mm	P250	5304812
		Rectangular, screw connection, 38 mm x 15 mm	PL20A	1012719
		Rectangular, screw connection, 56 mm x 28 mm	PL30A	1002314
		Rectangular, screw connection, 37 mm x 56 mm	PL40A	1012720
		Rectangular, screw connection, 80 mm x 80 mm	PL80A	1003865

Fine triple reflectors

Figure	Material	Description	Model name	Part no.
	PMMA/ABS	Fine triple, screw connection, suitable for laser sensors, 18 mm x 18 mm	PL10F	5311210

Reflective tape

Figure	Description	Model name	Part no.
	Self-adhesive, 50 mm x 60 mm	REF-IRF-56	5314244

→ **For additional accessories, please see page L-861**

F

F

Powerful clear material detection in an ultra-compact housing

Product description

New possibilities in machine construction: the ultra-compact WL2SG-2 miniature photoelectric sensor for detecting transparent objects offers features that were previously only available with much larger sensors. Ampules, foil and glass are reliably detected in the most confined of spaces.

The WL2SG-2 is adaptable: dust on the reflector or wear is compensated for in the same way as temperature changes and changes in light intensity. The WL2SG-2 is not only adaptable with regard to harsh industrial environments – settings for the respective application can also be selected via IO-Link.

Special operating modes for gaps in the bottle flow or for foil tear monitoring are available for extreme operating conditions. The W2S-2 offers optimal performance with an ultra-compact design for use in both pharmaceutical and automatic assembly machines.

The newest automation innovation is already on board. Configuration and diagnostics are set via the control in the same way as continuous monitoring.

At a glance

- Extremely high sensor size to sensing distance ratio
- High switching point accuracy
- Teach-in functions enable reliable settings
- Continuous threshold adaption (AutoAdapt)
- Single-lens autocollimation for visibility through apertures and drill holes
- Flexible sensor settings, monitoring, advanced diagnostics, and display thanks to IO-Link

Your benefits

- Machine design flexibility: the ultra-compact sensors offer above-average sensing distances and provide space-saving installation
- Remote setup: sensors installed in confined spaces can be set and monitored remotely via IO-Link.
- High operational reliability and system throughput: all familiar, highly-transparent objects are reliably detected
- Reliable object detection: precise switching characteristics and a high detection quality
- Universal use: conventional mounting and housing design
- The precise light spot of the PinPoint$^{2.0}$ LED enables the use of very small reflectors and reflector surfaces

SIRIC® optical ASIC invented by SICK

PinPoint 2.0 by SICK

IO-Link

Additional information

→ **www.mysick.com/en/W2SG-2**

For more information, just enter the link or scan the QR code and get direct access to technical data, CAD design models, operating instructions, software, application examples and much more.

Detailed technical data

Features

Sensor principle	Photoelectric retro-reflective sensor
Detection principle	Autocollimation
Dimensions (W x H x D)	7.7 mm x 21.8 mm x 13.5 mm
Housing design (light emission)	Rectangular
Sensing range max. [1]	0 m ... 1.2 m
Sensing range [1]	0 m ... 0.55 m
Type of light	Visible red light
Light source [2]	PinPoint LED
Light spot size (distance)	Ø 12 mm (250 mm)
Wave length	640 nm
Adjustment	Cable
Continuous threshold adaption (AutoAdapt)	✔
Special feature	Detection of transparent objects

[1] P250F.
[2] Average service life of 100,000 h at T_A = +25 °C.

Mechanics/electronics

Supply voltage [1]	10 V DC ... 30 V DC
Ripple [2]	≤ 5 V_{pp}
Power consumption [3]	≤ 20 mA
Output type	PNP / NPN (depending on type)
Switching mode	Light switching / Dark-switching / Light/dark-switching (depending on type)
Output current $I_{max.}$	< 50 mA
Response time [4]	< 0.5 ms
Switching frequency [5]	1,000 Hz
Connection type	Cable with connector, 200 mm [6] / Cable, 2 m [6] (depending on type)
Circuit protection	A [7], B [8], D [9]
Polarisation filter	✔
IO-Link	–/✔ (COM2) (depending on type)
Housing material	ABS/PC
Optics material	PMMA
Enclosure rating	IP 67
Ambient operating temperature	–20 °C ... +50 °C
Ambient storage temperature	–40 °C ... +75 °C

[1] Limit values.
[2] May not exceed or fall short of V_S tolerances.
[3] Without load.
[4] Signal transit time with resistive load.
[5] With light/dark ratio 1:1.
[6] Do not bend below 0 °C.
[7] A = V_S connections reverse-polarity protected.
[8] B = output reverse-polarity protected.
[9] D = outputs overcurrent and short-circuit protected.

F

Ordering information

Other models available at www.mysick.com/en/W2SG-2

WL2SG-2, clear material detection

- **Sensor principle:** photoelectric retro-reflective sensor
- **Detection principle:** autocollimation

Sensing range max.[1]	Adjustment	Output type	Switching mode	Connection	Connection diagram	Model name	Part no.
0 m ... 1.2 m	Cable	PNP	Light switching	Cable with connector M8, 4-pin, 200 mm	Cd-093	WL2SG-2P3235	1065929
			Dark-switching	Cable with connector M8, 4-pin, 200 mm	Cd-093	WL2SG-2F3235	1063647
		NPN	Light switching	Cable, 4-wire, 2 m	Cd-093	WL2SG-2N1135	1065934
			Dark-switching	Cable, 4-wire, 2 m	Cd-093	WL2SG-2E1135	1065930

[1] P250F.

WL2SG-2, IO-Link

- **Sensor principle:** photoelectric retro-reflective sensor
- **Detection principle:** autocollimation
- **Switching mode:** light/dark-switching

Sensing range max. [1]	Adjustment	Output type	IO-Link	Connection	Connection diagram	Model name	Part no.
0 m ... 1.2 m	Cable	PNP	Standard functions	Cable with connector M8, 4-pin, 200 mm	Cd-098	WL2SGC-2P3234	1063648

[1] P250F.

F

Dimensional drawings

Dimensions in mm (inch)

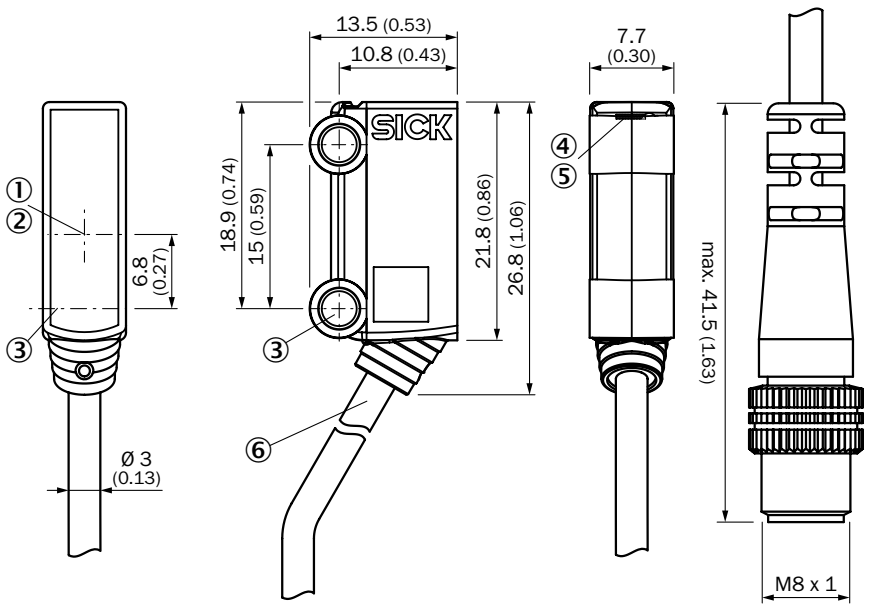

① Optical axis, receiver
② Optical axis, sender
③ Middle axis fixing hole Ø 3.2 mm
④ Status indicator LED green: power on
⑤ Status indicator LED, yellow:
Status of received light beam
⑥ Connection

Characteristic curves

WL2SG-2

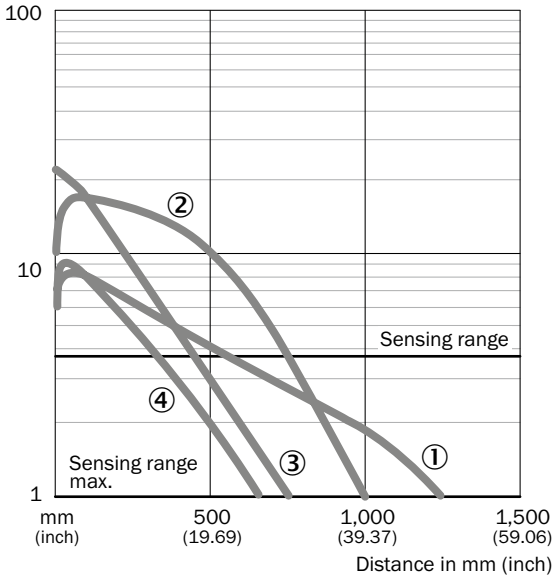

① P250F
② PL20A
③ REF-AC1000
④ PL10F

Bar diagrams

WL2SG-2

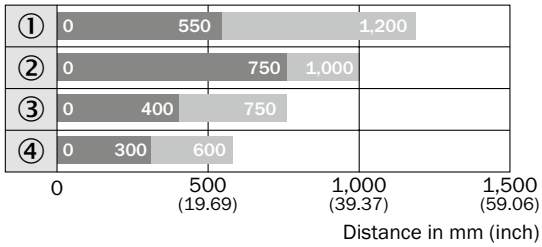

Sensing range Sensing range max.

① P250F
② PL20A
③ REF-AC1000
④ PL10F

Light spot diameter

WL2SG-2

Spot diameter in mm (inch)

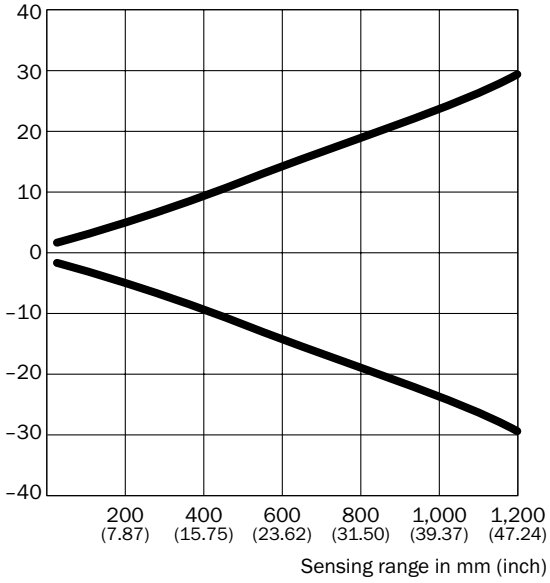

Connection diagram

Cd-093

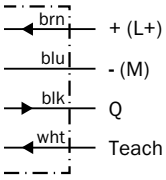

Cd-098

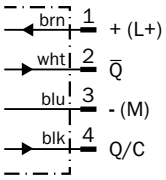

F

Recommended accessories

Plug connectors and cables

Connecting cable (female connector-open), PVC

Figure	Connection type head A	Connection type head B	Connecting cable	Enclosure rating	Model name	Part no.
	Female connector, M8, 4-pin, straight	Cable, open conductor heads	2 m, 4-wire	IP 67	DOL-0804-G02M	6009870
			5 m, 4-wire	IP 67	DOL-0804-G05M	6009872
	Female connector, M8, 4-pin, angled	Cable, open conductor heads	2 m, 4-wire	IP 67	DOL-0804-W02M	6009871
			5 m, 4-wire	IP 67	DOL-0804-W05M	6009873

Reflectors

Angular

Figure	Material	Description	Model name	Part no.
	PMMA/ABS	Rectangular, screw connection, 80 mm x 80 mm	PL80A	1003865

Fine triple reflectors

F

Figure	Material	Description	Model name	Part no.
	PMMA/ABS	Fine triple, screw connection, suitable for laser sensors, 47 mm x 47 mm	P250F	5308843
		Fine triple, screw connection, suitable for laser sensors, 18 mm x 18 mm	PL10F	5311210
	Plastic	Fine triple, chemically resistant, screw connection, 18 mm x 18 mm	PL10F CHEM	5321636
	PMMA/ABS	Fine triple, screw connection, suitable for laser sensors, 38 mm x 16 mm	PL20F	5308844
	Plastic	Fine triple, chemically resistant, screw connection, suitable for laser sensors, 16 mm x 38 mm	PL20F-CHEM	5326089
	PMMA/ABS	Fine triple, screw connection, suitable for laser sensors, 56 mm x 28 mm	PL30F	5326523
		Fine triple, screw connection, suitable for laser sensors, 76 mm x 45 mm	PL81-1F	5325060

Reflective tape

Figure	Description	Model name	Part no.
	Suitable for laser sensors, self-adhesive, cut, see alignment note, 56.3 mm x 56.3 mm	REF-AC1000-56	4063030

Special reflectors

Figure	Material	Description	Model name	Part no.
	Stainless steel V4A (1.4404, 316L)	Stainless steel reflector, hygienic design, chemically resistant, Enclosure rating IP 69K, D12-adapter shaft, 25 mm x 25 mm	PLH25-D12	2063404
		Stainless steel reflector, hygienic design, chemically resistant, Enclosure rating IP 69K, M12-adapter thread, 25 mm x 25 mm	PLH25-M12	2063403
		Stainless steel reflector, wash-down design, chemically resistant, Enclosure rating IP 69K, screw connection, 14 mm x 14 mm	PLV14-A	2063405

→ **For additional accessories, please see page L-861**

F

F

Best-in-class sensing performance in a miniature housing

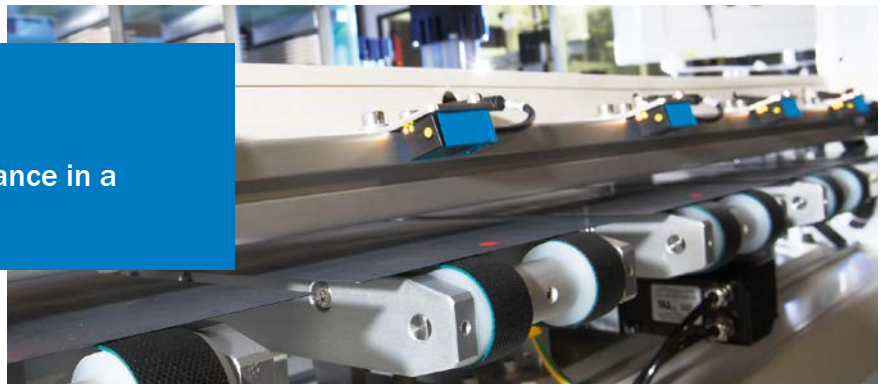

Product description

The W4-3 family of photoelectric sensors offers best-in-class performance in a miniature housing design. Using the latest SIRIC® and PinPoint LED technologies, these sensors provide reliable object detection of transparent and glossy objects like blisters, e-cards and aluminum cans. Optical axes on the flat side enable simple, space-saving integration in machine environments – even without mounting brackets.

At a glance

- Best-in-class background suppression, reliable detection of critical objects and a high immunity to ambient light
- Quick and easy setup using a precise 5-turn potentiometer, control wire or teach function
- Best background suppression in its class
- PinPoint LED for brightest light spot in its class

Your benefits

- Low-cost integration due to optimal machine integration in areas with limited space
- Application versatility due to reliable detection of shiny or jet-black objects
- Rugged mounting system with M3 threaded metal inserts reduces maintenance costs due to a long service life
- High immunity to ambient light reduces downtime caused by false trips
- Clearly visible light spot simplifies alignment

Additional information

→ **www.mysick.com/en/W4-3**

For more information, just enter the link or scan the QR code and get direct access to technical data, CAD design models, operating instructions, software, application examples and much more.

Detailed technical data

Features

	WTB4-3	WTV4-3	WL4-3	WSE4-3
Sensor principle	Photoelectric proximity sensor		Photoelectric retro-reflective sensor	Through-beam photo-electric sensor
Detection principle	Background suppression		Standard optics	–
Dimensions (W x H x D)	16 mm x 39.5 mm x 12 mm			
Housing design (light emission)	Rectangular			
Sensing range max.	4 mm ... 150 mm [1]	3 mm ... 50 mm [1] (depending on type)	0.01 m ... 4.5 m [2]	0 m ... 4 m
Sensing range	15 mm ... 150 mm [1]	5 mm ... 50 mm [1] (depending on type)	0.02 m ... 3.5 m [2]	0 m ... 3.5 m
Type of light	Visible red light	Visible red light / Infrared light (depending on type)	Visible red light	
Light source [3]	PinPoint LED$^{2.0}$			
Wave length				
Visible red light	650 nm / 660 nm (depending on type)	650 nm		
Infrared light	–	880 nm	–	
Adjustment	Potentiometer, 5 turns Cable Single teach-in button (depending on type)	Potentiometer, 5 turns	–	
Special feature	Line-shaped light spot	V-optics / line-shaped light spot (depending on type)	–	

[1] Object with 90 % reflectance (referred to standard white, DIN 5033)
[2] PL80A.
[3] Average service life of 100,000 h at T_A = +25 °C.

Mechanics/electronics

	WTB4-3	WTV4-3	WL4-3	WSE4-3
Supply voltage	10 V DC ... 30 V DC [1]			
Ripple [2]	< 5 V_{pp}			
Power consumption	≤ 20 mA [3]			≤ 20 mA [4]
Output type	PNP / NPN (depending on type)			
Switching mode	Light switching / Dark-switching / Light/dark-switching (depending on type)			
Output current $I_{max.}$	≤ 100 mA			
Response time [5]	< 0.5 ms			
With IO-Link light [7]	< 0.65 ms	–		
Switching frequency [6]	1,000 Hz			
Connection type	Cable, 2 m [8] / Male connector, M8 / Cable with connector, M12, 150 mm [8] (depending on type)			
Circuit protection	A [9], C [10], D [11]			
Protection class	III			
Weight	30 g			60 g
Polarisation filter	–		✔	–
Housing material	ABS			
Optics material	PMMA			
Enclosure rating	IP 66 / IP 67			

F

	WTB4-3	WTV4-3	WL4-3	WSE4-3
Test input sender off	–			“Test” to 0 V
Ambient operating temperature	–40 °C ... +60 °C			
Ambient storage temperature	–40 °C ... +75 °C			

[1] Limit values.
[2] May not exceed or fall short of V_S tolerances.
[3] Without load.
[4] Sender.
[5] Signal transit time with resistive load.
[6] With light/dark ratio 1:1.
[7] With light/dark ratio 1:1 in switching mode. Different values possible in COM2 mode.
[8] Do not bend below 0 °C.
[9] A = V_S connections reverse-polarity protected.
[10] C = interference suppression.
[11] D = outputs overcurrent and short-circuit protected.

Ordering information

Other models available at www.mysick.com/en/W4-3

WTB4-3

- **Supply voltage:** 10 V DC ... 30 V DC (Limit values.)
- **Sensor principle:** photoelectric proximity sensor
- **Detection principle:** background suppression
- **Type of light:** visible red light
- **Light spot size (distance):** Ø 7 mm (50 mm)

F

Sensing range max. [1]	Output type	Switching mode	Adjustment	Connection	Connection diagram	Model name	Part no.
4 mm ... 150 mm	PNP	Light switching	Potentiometer, 5 turns	Cable, 3-wire, 2 m, PVC	Cd-043	WTB4-3P1361	1028094
				Connector M8, 3-pin	Cd-045	WTB4-3P2161	1028099
			Single teach-in button	Cable, 3-wire, 2 m, PVC	Cd-043	WTB4-3P1362	1028081
				Connector M8, 3-pin	Cd-045	WTB4-3P2162	1028084
			Cable, Single teach-in button [2]	Cable, 4-wire, 5 m, PVC	Cd-093	WTB4-3P1264	1041890
		Dark-switching	Potentiometer, 5 turns	Cable, 3-wire, 2 m, PVC	Cd-043	WTB4-3F1361	1028105
				Connector M8, 3-pin	Cd-045	WTB4-3F2161	1028107
		Light/dark-switching	Potentiometer, 5 turns	Connector M8, 4-pin	Cd-083	WTB4-3P2261	1028100
				Cable, 4-wire, 2 m, PVC	Cd-094	WTB4-3P1161	1028096
			Single teach-in button	Connector M8, 4-pin	Cd-083	WTB4-3P2262	1028085
	NPN	Light switching	Potentiometer, 5 turns	Cable, 3-wire, 5 m, PVC	Cd-043	WTB4-3N1461	1057301
				Connector M8, 3-pin	Cd-045	WTB4-3N2161	1028104
			Single teach-in button	Cable, 3-wire, 2 m, PVC	Cd-043	WTB4-3N1362	1028087
				Connector M8, 3-pin	Cd-045	WTB4-3N2162	1028088
			Cable, Single teach-in button [2]	Cable, 4-wire, 2 m, PVC	Cd-093	WTB4-3N1164	1028090
		Dark-switching	Potentiometer, 5 turns	Cable, 3-wire, 2 m, PVC	Cd-043	WTB4-3E1361	1028108
				Connector M8, 3-pin	Cd-045	WTB4-3E2161	1028110
		Light/dark-switching	Potentiometer, 5 turns	Cable, 4-wire, 2 m, PVC	Cd-094	WTB4-3N1161	1028102

[1] Object with 90 % reflectance (referred to standard white, DIN 5033)
[2] External teach-in: pulse > 2 s with voltage Uv with PNP and M with NPN.

WTB4-3, line-shaped light spot

- **Supply voltage:** 10 V DC ... 30 V DC (Limit values.)
- **Sensor principle:** photoelectric proximity sensor
- **Detection principle:** background suppression
- **Type of light:** visible red light
- **Light spot size (distance):** 5 mm x 28 mm (50 mm)

Sensing range max. [1]	Output type	Switching mode	Adjustment	Connection	Connection diagram	Model name	Part no.
4 mm ... 150 mm	PNP	Light switching	Potentiometer, 5 turns	Cable, 3-wire, 2 m, PVC	Cd-043	WTB4-3P1371	1028121
				Connector M8, 3-pin	Cd-045	WTB4-3P2171	1028123
		Light/dark-switching		Connector M8, 4-pin	Cd-083	WTB4-3P2271	1042190
	NPN	Light switching	Potentiometer, 5 turns	Cable, 3-wire, 2 m, PVC	Cd-043	WTB4-3N1371	1028125
				Connector M8, 3-pin	Cd-045	WTB4-3N2171	1028126

[1] Object with 90 % reflectance (referred to standard white, DIN 5033)

WTV4-3, V-optics, line-shaped light spot

- **Supply voltage:** 10 V DC ... 30 V DC (Limit values.)
- **Sensor principle:** photoelectric proximity sensor
- **Detection principle:** background suppression
- **Type of light:** visible red light
- **Light spot size (distance):** 3 mm x 20 mm (40 mm)

Sensing range max. [1]	Output type	Switching mode	Adjustment	Connection	Connection diagram	Model name	Part no.
3 mm ... 50 mm	PNP	Light switching	Potentiometer, 5 turns	Connector M8, 4-pin	Cd-083	WTV4-3P2271	1046644
	NPN	Light switching	Potentiometer, 5 turns	Cable, 4-wire, 2 m, PVC	Cd-083	WTV4-3N1171	1046898

[1] Object with 90 % reflectance (referred to standard white, DIN 5033)

WTV4-3, V-optics

- **Supply voltage:** 10 V DC ... 30 V DC (Limit values.)
- **Sensor principle:** photoelectric proximity sensor
- **Detection principle:** background suppression
- **Light spot size (distance):** Ø 10 mm (40 mm)
- **Adjustment:** potentiometer, 5 turns

Type of light	Sensing range max. [1]	Output type	Switching mode	Connection	Connection diagram	Model name	Part no.
Visible red light	4 mm ... 50 mm	PNP	Light switching	Cable, 3-wire, 2 m, PVC	Cd-043	WTV4-3P1341	1028111
				Connector M8, 3-pin	Cd-045	WTV4-3P2141	1028113
			Light/dark-switching	Connector M8, 4-pin	Cd-083	WTV4-3P2241	1028114
		NPN	Light switching	Cable, 3-wire, 2 m, PVC	Cd-043	WTV4-3N1341	1028115
				Connector M8, 3-pin	Cd-045	WTV4-3N2141	1028116
Infrared light	4 mm ... 50 mm	PNP	Light switching	Cable, 3-wire, 2 m, PVC	Cd-043	WTV4-3P1321	1029888
		NPN	Light switching	Cable, 3-wire, 2 m, PVC	Cd-043	WTV4-3N1321	1029885
			Light/dark-switching	Connector M8, 4-pin	Cd-083	WTV4-3N2221	1048995

[1] Object with 90 % reflectance (referred to standard white, DIN 5033)

WL4-3

- **Supply voltage:** 10 V DC ... 30 V DC (Limit values.)
- **Sensor principle:** photoelectric retro-reflective sensor
- **Detection principle:** standard optics
- **Type of light:** visible red light
- **Light spot size (distance):** Ø 75 mm (1.5 m)

Sensing range max. [1]	Output type	Switching mode	Connection	Connection diagram	Model name	Part no.
0.01 m ... 4.5 m	PNP	Light switching	Cable, 3-wire, 2 m, PVC	Cd-043	WL4-3P1330	1028143
			Connector M8, 3-pin	Cd-045	WL4-3P2130	1028146
		Dark-switching	Cable, 3-wire, 2 m, PVC	Cd-043	WL4-3F1330	1028152
			Connector M8, 3-pin	Cd-045	WL4-3F2130	1028155
		Light/dark-switching	Connector M8, 4-pin	Cd-083	WL4-3P2230	1028147
	NPN	Light switching	Cable, 3-wire, 2 m, PVC	Cd-043	WL4-3N1330	1028148
			Connector M8, 3-pin	Cd-045	WL4-3N2130	1028151
		Dark-switching	Cable, 3-wire, 2 m, PVC	Cd-043	WL4-3E1330	1028156
			Connector M8, 3-pin	Cd-045	WL4-3E2130	1028158

[1] PL80A.

F

WSE4-3

- **Supply voltage:** 10 V DC ... 30 V DC (Limit values.)
- **Sensor principle:** through-beam photoelectric sensor
- **Type of light:** visible red light
- **Light spot size (distance):** Ø 210 mm (2 m)

Sensing range max.	Output type	Switching mode	Connection	Connection diagram	Model name	Part no.
0 m ... 4 m	PNP	Light switching	Cable, 3-wire, 2 m, PVC	Cd-061	WSE4-3P1330	1028159
			Cable, 3-wire, 5 m, PVC	Cd-061	WSE4-3P1430	1029645
			Connector M8, 3-pin	Cd-069	WSE4-3P2130	1028163
		Dark-switching	Cable, 3-wire, 2 m, PVC	Cd-061	WSE4-3F1330	1028168
			Connector M8, 3-pin	Cd-069	WSE4-3F2130	1028171
		Light/dark-switching	Connector M8, 4-pin	Cd-072	WSE4-3P2230	1028160
	NPN	Light switching	Cable, 3-wire, 2 m, PVC	Cd-061	WSE4-3N1330	1028164
			Connector M8, 3-pin	Cd-069	WSE4-3N2130	1028167
		Dark-switching	Cable, 3-wire, 2 m, PVC	Cd-061	WSE4-3E1330	1028172
			Connector M8, 3-pin	Cd-069	WSE4-3E2130	1028175

Dimensional drawings

Dimensions in mm (inch)

WTB4-3, WTV4-3, potentiometer

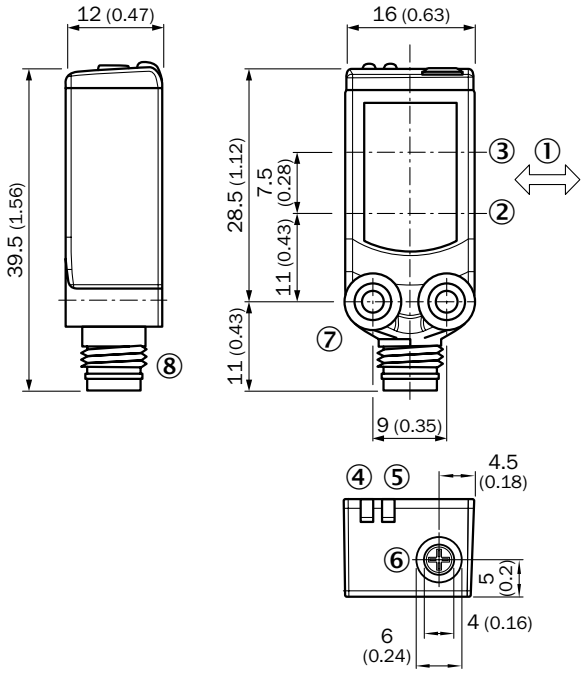

① Standard direction of the material being detected
② Optical axis, sender
③ Optical axis, receiver
④ Status indicator LED, yellow: Status of received light beam
⑤ Status indicator LED green: power on
⑥ Potentiometer
⑦ Threaded mounting hole M3
⑧ Connection

WTB4-3, WTV4-3, single teach button

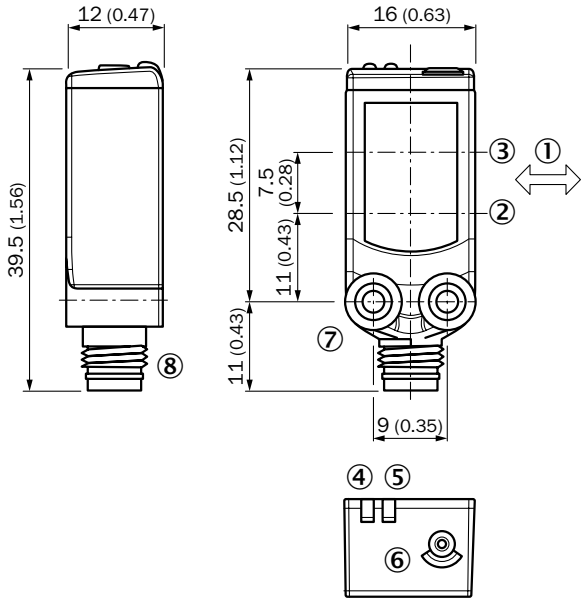

① Standard direction of the material being detected
② Optical axis sender
③ Optical axis receiver
④ Status indicator LED, yellow: Status of received light beam
⑤ Status indicator LED green: power on
⑥ Teach-in button
⑦ Threaded mounting hole M3
⑧ Connection

F

WL4-3

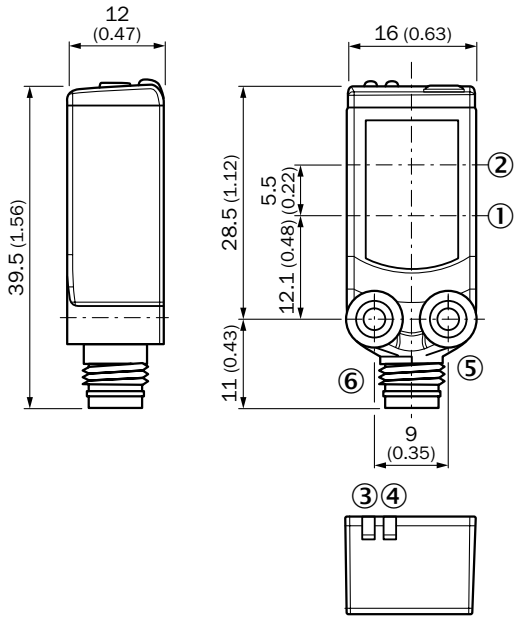

① Center of optical axis, sender
② Center of optical axis, receiver
③ LED indicator orange: status of received light beam
④ Status indicator LED green: power on
⑤ Threaded mounting hole M3
⑥ Connection

WSE4-3

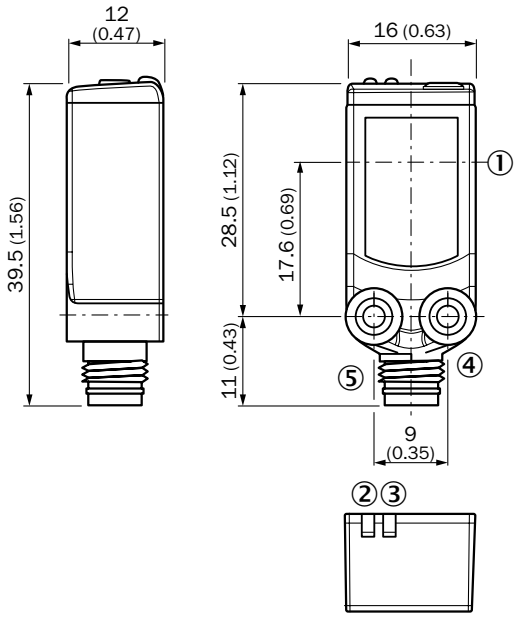

① Center of optical axis
② LED indicator orange: status of received light beam
③ Status indicator LED green: power on
④ Threaded mounting hole M3
⑤ Connection

F

Characteristic curves

Black-white shift

WTB4-3

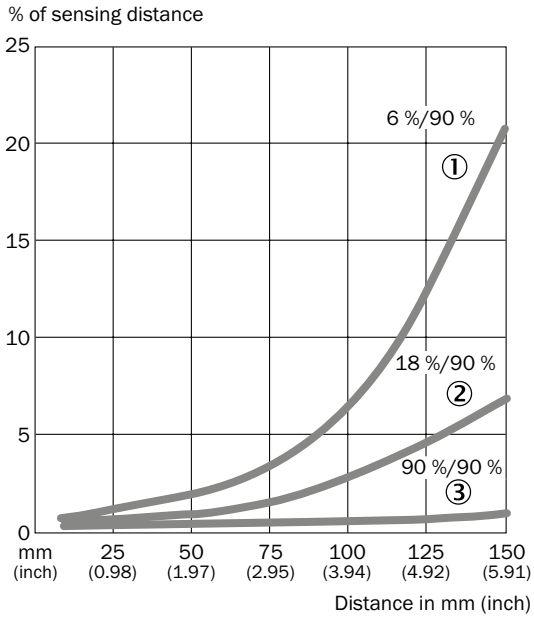

① Sensing range on black, 6 % remission
② Sensing range on gray, 18 % remission
③ Sensing range on white, 90 % remission

WTV4-3, V-optics

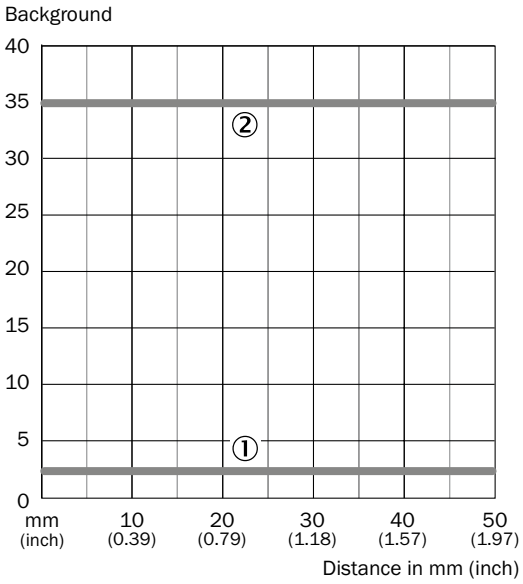

① Black-white shift 90% / 6%
② Distance to the background with transparent objects

WL4-3

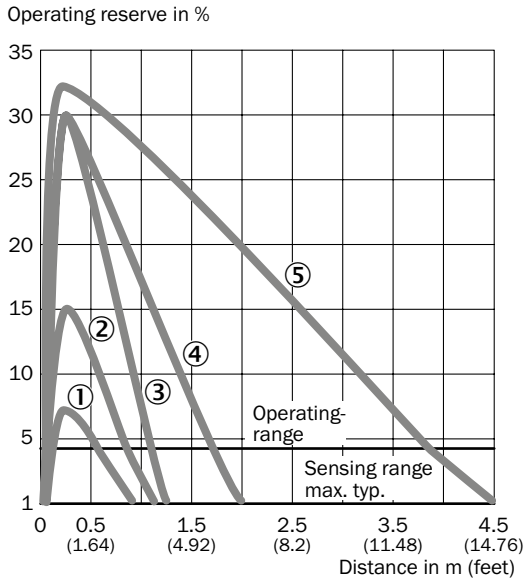

① REF-IRF-56
② PL10F
③ PL20A
④ PL40A
⑤ PL80A

WSE4-3

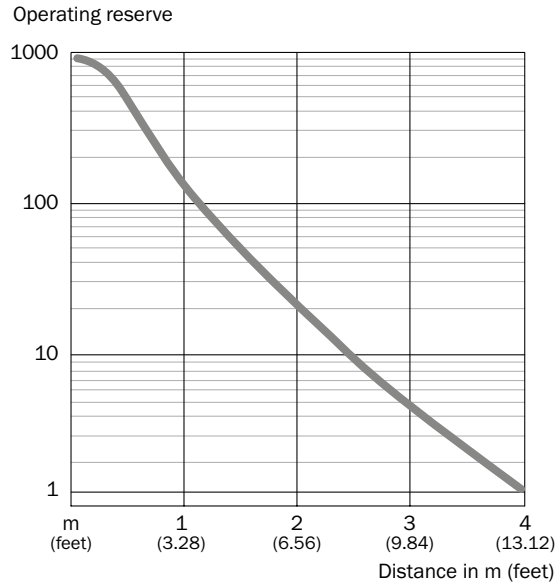

Bar diagrams

WTB4-3

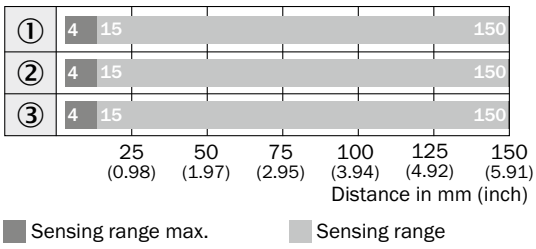

① Sensing range on black, 6 % remission
② Sensing range on gray, 18 % remission
③ Sensing range on white, 90 % remission

WTB4-3, line-shaped light spot

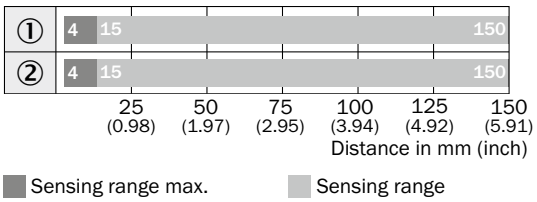

① Sensing range on white, 90 % remission
② Sensing range on black, 6 % remission

WLG4-3 with polarisation filter

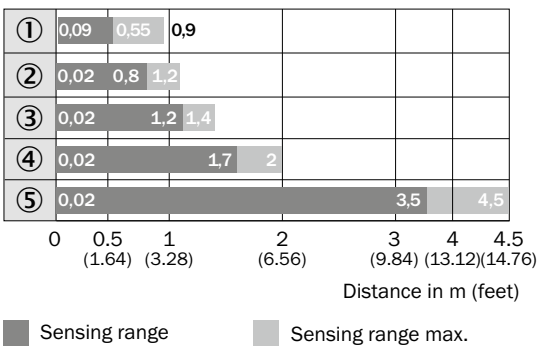

① REF-IRF-56
② PL10F
③ PL20A
④ PL40A
⑤ PL80A

WSE4-3

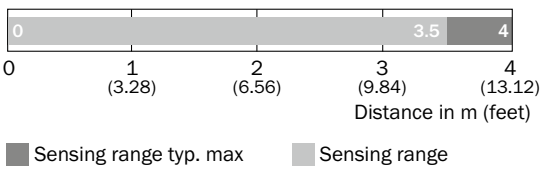

F

Light spot diameter

WTB4-3, line-shaped light spot

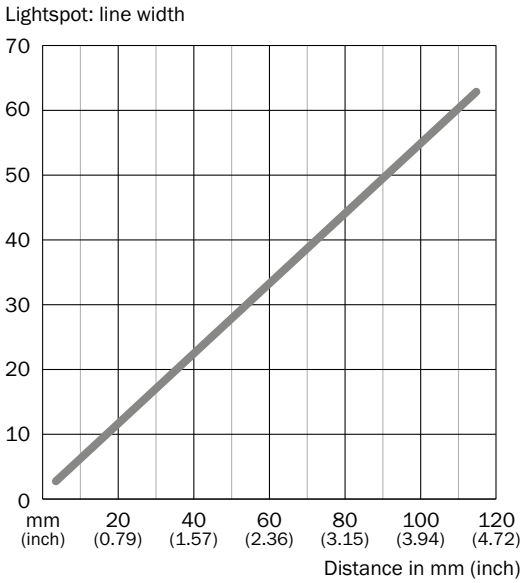

WTV4-3, V-optics, line-shaped light spot

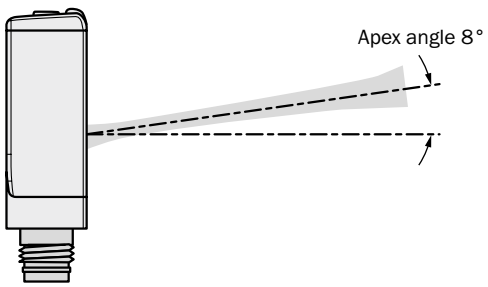

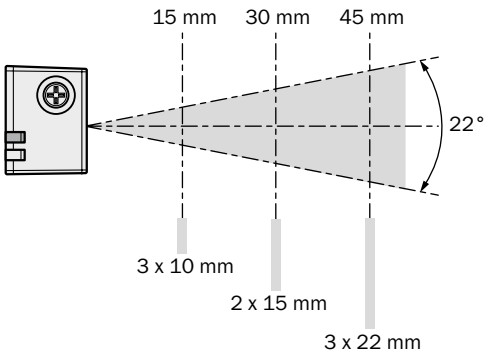

F

Minimum detectable object

WTB4-3, line-shaped light spot

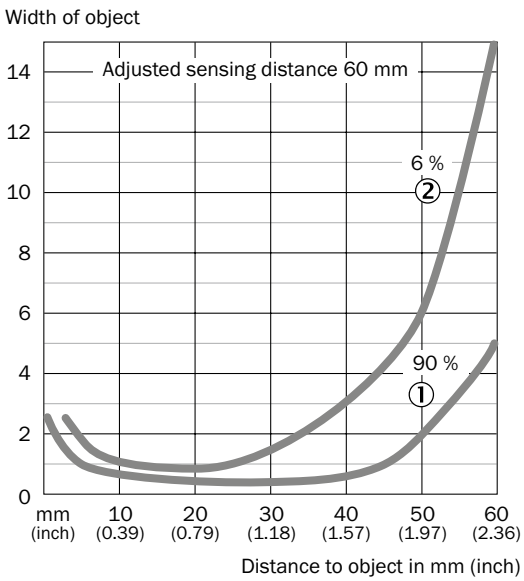

WTB4-3, line-shaped light spot

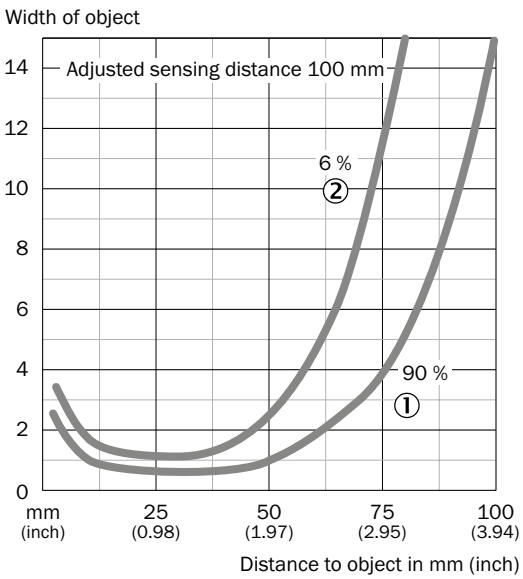

Connection diagram

Cd-043

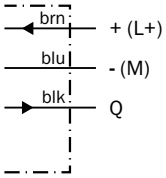

Cd-045

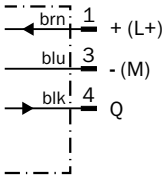

Cd-061

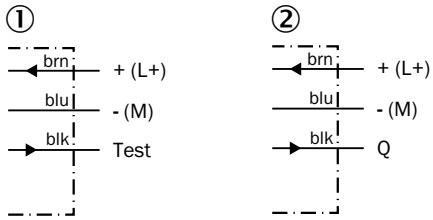

① Sender
② Receiver

Cd-069

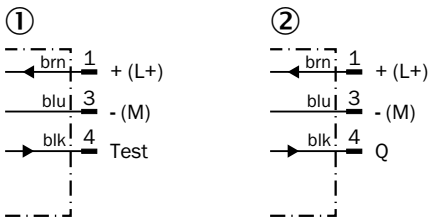

① Sender
② Receiver

Cd-072

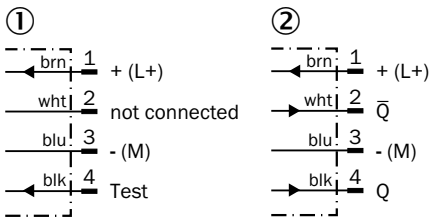

① Sender
② Receiver

Cd-083

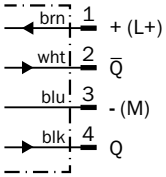

Cd-093

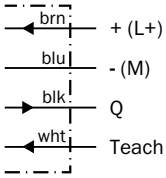

Cd-094

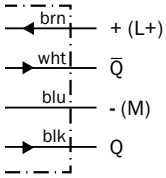

F

Recommended accessories

Plug connectors and cables

Connecting cable (female connector-open), PVC

- **Cable material:** PVC
- **Connector material:** TPU

Figure	Connection type head A	Connection type head B	Connecting cable	Enclosure rating	Model name	Part no.
	Female connector, M8, 3-pin, straight	Cable, open conductor heads	2 m, 3-wire	IP 67	DOL-0803-G02M	6010785
			5 m, 3-wire	IP 67	DOL-0803-G05M	6022009
	Female connector, M8, 3-pin, angled	Cable, open conductor heads	2 m, 3-wire	IP 67	DOL-0803-W02M	6008489
			5 m, 3-wire	IP 67	DOL-0803-W05M	6022010
	Female connector, M8, 4-pin, straight	Cable, open conductor heads	2 m, 4-wire	IP 67	DOL-0804-G02M	6009870
			5 m, 4-wire	IP 67	DOL-0804-G05M	6009872
	Female connector, M8, 4-pin, angled	Cable, open conductor heads	2 m, 4-wire	IP 67	DOL-0804-W02M	6009871
			5 m, 4-wire	IP 67	DOL-0804-W05M	6009873

Female connector (ready to assemble)

Figure	Connection type head A	Connection type head B	Connector material	Enclosure rating	Model name	Part no.
	Female connector, M8, 3-pin, straight	Screw-type terminals	PBT	IP 67	DOS-0803-G	7902077
	Female connector, M8, 3-pin, angled	Pin penetration	PBT	IP 67	DOS-0803-W	7902078
	Female connector, M8, 4-pin, straight	Screw-type terminals	PBT	IP 67	DOS-0804-G	6009974
	Female connector, M8, 4-pin, angled	Pin penetration	PBT	IP 67	DOS-0804-W	6009975

Male connector (ready to assemble)M8, 3-pin

Figure	Connection type head A	Connection type head B	Connector material	Enclosure rating	Model name	Part no.
	Male connector, M8, 3-pin, straight	Screw-type terminals	PBT	IP 67	STE-0803-G	6037322
	Male connector, M8, 4-pin, straight	Screw-type terminals	PBT	IP 67	STE-0804-G	6037323

Universal bar clamp systems

Figure	Material	Description	Model name	Part no.
	Zinc plated steel (sheet), Diecast zinc (clamp)	Plate N08 for universal clamp bracket	BEF-KHS-N08	2051607

F

Reflectors

Angular

Figure	Material	Description	Model name	Part no.
	PMMA/ABS	Rectangular, screw connection, 47 mm x 47 mm	P250	5304812
		Rectangular, screw connection, 38 mm x 15 mm	PL20A	1012719
		Rectangular, screw connection, 56 mm x 28 mm	PL30A	1002314
		Rectangular, screw connection, 37 mm x 56 mm	PL40A	1012720
		Rectangular, screw connection, 80 mm x 80 mm	PL80A	1003865

Fine triple reflectors

Figure	Material	Description	Model name	Part no.
	PMMA/ABS	Fine triple, screw connection, suitable for laser sensors, 18 mm x 18 mm	PL10F	5311210

Reflective tape

Figure	Description	Model name	Part no.
	Self-adhesive, 50 mm x 60 mm	REF-IRF-56	5314244

Round

Figure	Material	Description	Model name	Part no.
	PMMA/ABS	Round, plugable for metal plates	PL22-3	1004488

→ **For additional accessories, please see page L-861**

F

PTFE-coated photoelectric sensors withstand the harshest environments

PTFE | IP 69K | SIRIC®

Product description

The W4-3 photoelectric sensors in a Teflon® shell coating are resistant to harsh chemicals. Both the housing and cable are Teflon coated, making them ideal for wet, harsh environments in the food and beverage industry.

At a glance

- Sensor and cable have a rugged Teflon coating for use in the most aggressive environments
- Suitable for use in the food and beverage industry
- Sensing range adjustment via teach wire
- Background suppression and through-beam types available

Your benefits

- High cost savings since neither the sensor nor the cable requires a protective barrier
- Less machine downtime due to a long sensor life that withstands all cleaning and process agents

Additional information

→ **www.mysick.com/en/W4-3_PTFE**

For more information, just enter the link or scan the QR code and get direct access to technical data, CAD design models, operating instructions, software, application examples and much more.

Detailed technical data

Features

	WT4-3 PTFE	WSE4-3 PTFE
Sensor principle	Photoelectric proximity sensor	Through-beam photoelectric sensor
Detection principle	Background suppression	–
Dimensions (W x H x D)	22 mm x 42 mm x 21.8 mm	
Housing design (light emission)	Rectangular	
Sensing range max.	4 mm ... 120 mm [1]	0 m ... 3 m
Sensing range	15 mm ... 120 mm [1]	0 m ... 2.5 m
Type of light	Visible red light	
Light source [2]	PinPoint LED	
Light spot size (distance)	Ø 7 mm (50 mm)	Ø 210 mm (2 m)
Wave length	650 nm	
Adjustment	Cable, Single teach-in button	–

[1] Object with 90 % reflectance (referred to standard white, DIN 5033)
[2] Average service life of 100,000 h at T_A = +25 °C.

Mechanics/electronics

	WT4-3 PTFE	WSE4-3 PTFE
Supply voltage [1]	10 V DC ... 30 V DC	
Ripple [2]	< 5 V_{pp}	
Power consumption	≤ 20 mA [3]	≤ 20 mA [4] [5]
Output type	PNP / NPN (depending on type)	
Switching mode	Light switching	Light switching / Dark-switching (depending on type)
Output current $I_{max.}$	≤ 100 mA	
Response time [6]	< 0.5 ms	
Switching frequency [7]	1,000 Hz	
Connection type [8]	Cable, 4-wire, 5 m, PVC/PTFE coating	
Circuit protection	A [9], C [10], D [11]	
Protection class	III	
Weight	30 g	
Housing material	PTFE	
Optics material	PMMA	
Enclosure rating	IP 68 / IP 69K	
Test input sender off	–	"TEST" to 0 V
Ambient operating temperature	–40 °C ... +60 °C	
Ambient storage temperature	–40 °C ... +75 °C	

[1] Limit values.
[2] May not exceed or fall short of V_S tolerances.
[3] Without load.
[4] Sender.
[5] Receiver.
[6] Signal transit time with resistive load.
[7] With light/dark ratio 1:1.
[8] Do not bend below 0 °C.
[9] A = V_S connections reverse-polarity protected.
[10] C = interference suppression.
[11] D = outputs overcurrent and short-circuit protected.

F

Ordering information

Other models available at www.mysick.com/en/W4-3_PTFE

WT4-3 PTFE

- **Sensor principle:** photoelectric proximity sensor
- **Detection principle:** background suppression
- **Adjustment:** cable, single teach-in button
- **Connection:** cable, 4-wire, 5 m, PVC/PTFE coating

Sensing range max. [1]	Output type	Switching mode	Connection diagram	Model name	Part no.
4 mm ... 120 mm	PNP	Light switching	Cd-093	WTB4T-3P1264	1028091
	NPN	Light switching	Cd-093	WTB4T-3N1264	1028092

[1] Object with 90 % reflectance (referred to standard white, DIN 5033)

WSE4-3 PTFE

- **Sensor principle:** through-beam photoelectric sensor
- **Connection:** cable, 3-wire, 5 m, PVC/PTFE coating

Sensing range max.	Output type	Switching mode	Connection diagram	Model name	Part no.
0 m ... 3 m	PNP	Light switching	Cd-061	WSE4T-3P1430	1029646
		Dark-switching	Cd-061	WSE4T-3F1430	1029647
	NPN	Dark-switching	Cd-061	WSE4T-3E1430	1029648

F

Dimensional drawings

Dimensions in mm (inch)

WTB4T-3, PTFE

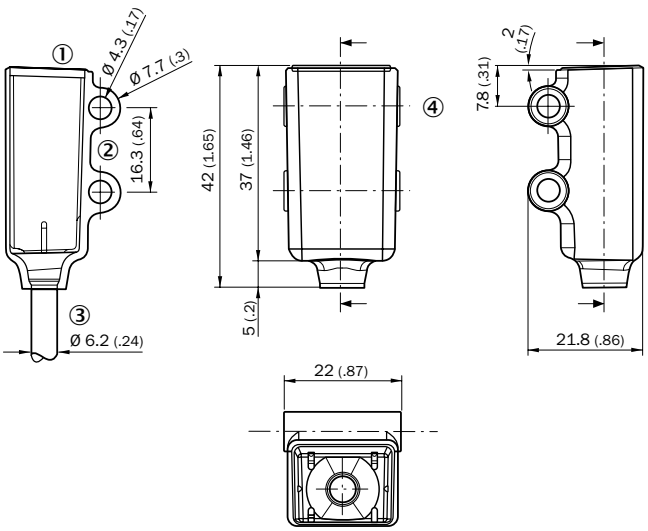

① LED signal
② Mounting hole, Ø 4.3 mm
③ Cable 5 m, Ø 3.4 mm, 2 m Teflon coated Ø 6.2 mm
④ Optical axis, receiver
⑤ Optical axis, sender

Characteristic curves

WSE4T-3 PTFE

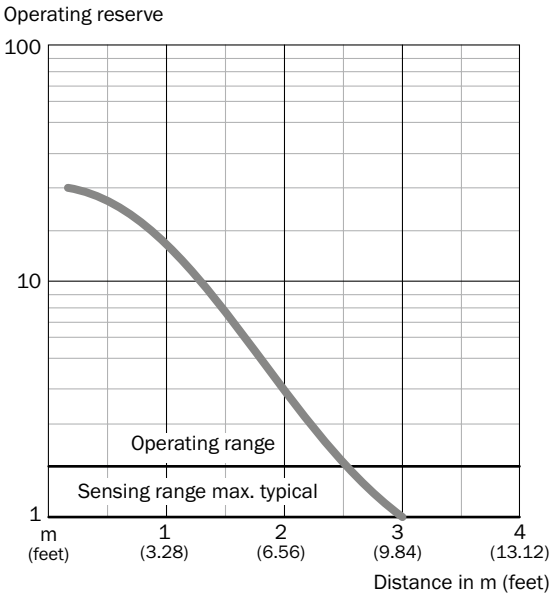

Bar diagrams

WSE4T-3 PTFE

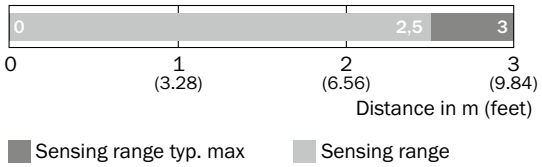

Connection diagram

Cd-061

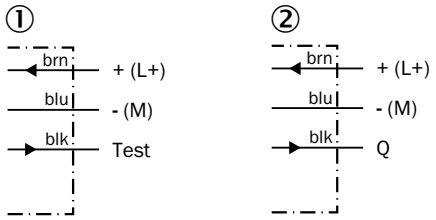

① Sender
② Receiver

Cd-093

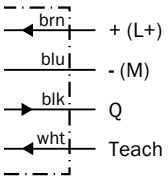

Recommended accessories

Plug connectors and cables

Female connector (ready to assemble)

Figure	Connection type head A	Connection type head B	Connector material	Enclosure rating	Model name	Part no.
	Female connector, M8, 3-pin, straight	Screw-type terminals	PBT	IP 67	DOS-0803-G	7902077
	Female connector, M8, 3-pin, angled	Pin penetration	PBT	IP 67	DOS-0803-W	7902078
	Female connector, M8, 4-pin, straight	Screw-type terminals	PBT	IP 67	DOS-0804-G	6009974
	Female connector, M8, 4-pin, angled	Pin penetration	PBT	IP 67	DOS-0804-W	6009975

Male connector (ready to assemble)M8, 3-pin

Figure	Connection type head A	Connection type head B	Connector material	Enclosure rating	Model name	Part no.
	Male connector, M8, 3-pin, straight	Screw-type terminals	PBT	IP 67	STE-0803-G	6037322
	Male connector, M8, 4-pin, straight	Screw-type terminals	PBT	IP 67	STE-0804-G	6037323

→ **For additional accessories, please see page L-861**

F

Reliable detection of transparent objects

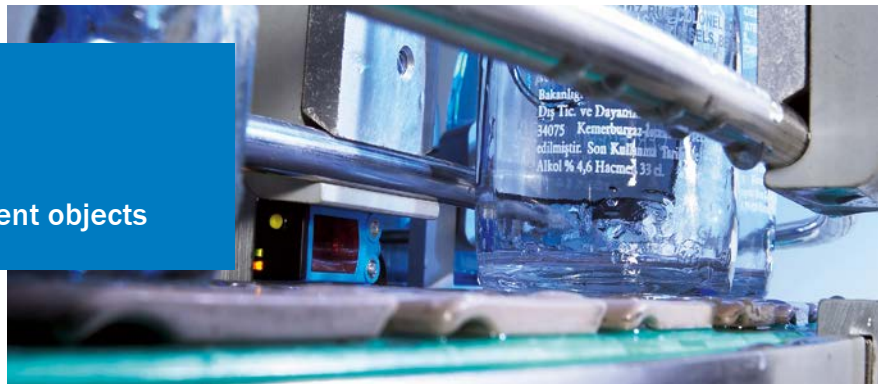

F

Product description

The WLG4-3 photoelectric retro-reflective sensor reliably detects transparent objects such as glass. Its small size is ideal for applications with limited mounting space. Adjusting these sensors can be done with the click of an easy-to-use teach-in pushbutton. Plus, these sensors don't require any brackets, making them easy to mount directly to the machine – even in tight spaces.

At a glance

- Fast and reliable setup via teach-in pushbutton
- Continuous threshold adaptation (AutoAdapt) technology to detect objects in changing conditions such as temperature, contamination and reflector wear
- Versions without polarizing filters to better detect depolarizing objects such as PET bottles, CD sleeves and shrink-wrapped, glossy objects

Your benefits

- Reliable and quick setting via the push of a button
- Flat housing design eliminates alignment or mounting brackets, which saves time and money
- Low-cost machine integration due to small dimensions that enable mounting in areas with space restrictions
- Quick and easy setup due to highly visible intensive light spot
- The PinPoint LED's well-defined, intense light spot simplifies alignment
- Nearly all transparent objects can be reliably detected

Additional information

→ **www.mysick.com/en/W4-3_Glass**
For more information, just enter the link or scan the QR code and get direct access to technical data, CAD design models, operating instructions, software, application examples and much more.

Detailed technical data

Features

Sensor principle	Photoelectric retro-reflective sensor
Dimensions (W x H x D)	16 mm x 39.5 mm x 12 mm
Housing design (light emission)	Rectangular
Sensing range max. [1]	0.01 m ... 4.5 m
Sensing range [1]	0.02 m ... 3.5 m
Type of light	Visible red light
Light source [2]	PinPoint LED
Light spot size (distance)	Ø 75 mm (1.5 m)
Wave length	650 nm
Adjustment	Cable, Single teach-in button / Single teach-in button (depending on type)
Continuous threshold adaption (AutoAdapt)	✔
Special feature	Detection of transparent objects

[1] PL80A.
[2] Average service life of 100,000 h at T_A = +25 °C.

Mechanics/electronics

Supply voltage [1]	10 V DC ... 30 V DC
Ripple [2]	< 5 V_{pp}
Power consumption [3]	≤ 20 mA
Output type	PNP / NPN (depending on type)
Switching mode	Light switching / Dark-switching (depending on type)
Output current $I_{max.}$	≤ 100 mA
Response time [4]	< 0.5 ms
Switching frequency [5]	1,000 Hz
Angle of reception	Approx. 30°
Attenuation along light beam	> 8 %
Connection type	Cable, 2 m [6] / Male connector, M8 / Cable with connector, M12, 150 mm [6] (depending on type)
Circuit protection	A [7], C [8], D [9]
Protection class	III
Weight	30 g
Polarisation filter	✔
Housing material	ABS
Optics material	PMMA
Enclosure rating	IP 66, IP 67
Ambient operating temperature	–40 °C ... +60 °C
Ambient storage temperature	–40 °C ... +75 °C

[1] Limit values.
[2] May not exceed or fall short of V_S tolerances.
[3] Without load.
[4] Signal transit time with resistive load.
[5] With light/dark ratio 1:1.
[6] Do not bend below 0 °C.
[7] A = V_S connections reverse-polarity protected.
[8] C = interference suppression.
[9] D = outputs overcurrent and short-circuit protected.

F

Ordering information

Other models available at www.mysick.com/en/W4-3_Glass

WLG4-3 with polarisation filter

- **Polarisation filter: ✔**

Sensing range max. [1]	Output type	Switching mode	Adjustment	Connection	Connection diagram	Model name	Part no.
0.01 m ... 4.5 m	PNP	Light switching	Single teach-in button	Cable, 3-wire, 2 m, PVC	Cd-043	WLG4-3P1332	1042844
				Connector M8, 3-pin	Cd-045	WLG4-3P2132	1029567
		Dark-switching	Single teach-in button	Connector M8, 3-pin	Cd-045	WLG4-3F2132	1028127
			Cable, Single teach-in button	Connector M8, 4-pin	Cd-092	WLG4-3F2234	1028130
				Cable with connector M12, 4-pin, 150 mm, PVC	Cd-092	WLG4-3F3434	1043683
	NPN	Dark-switching	Single teach-in button	Cable, 3-wire, 2 m, PVC	Cd-043	WLG4-3E1332	1028131
				Connector M8, 3-pin	Cd-045	WLG4-3E2132	1028132

[1] PL80A.

Dimensional drawings

Dimensions in mm (inch)

WLG4-3

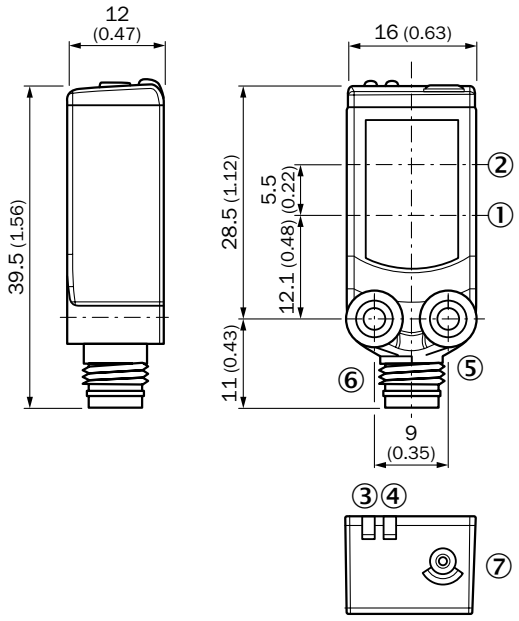

① Center of optical axis, sender
② Center of optical axis, receiver
③ LED indicator orange: status of received light beam
④ Status indicator LED green: power on
⑤ Threaded mounting hole M3
⑥ Connection
⑦ Teach-in button

Characteristic curves

Operating reserve

WLG4-3

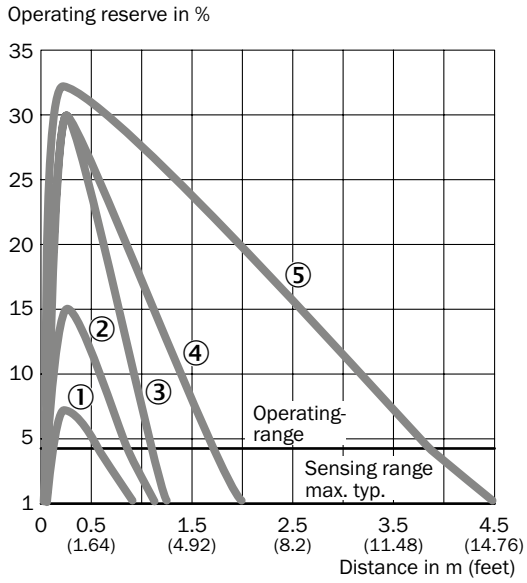

① REF-IRF-56
② PL10F
③ PL20A
④ PL40A
⑤ PL80A

Bar diagrams

WLG4-3

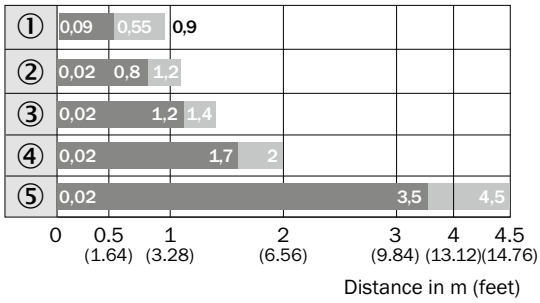

① REF-IRF-56
② PL10F
③ PL20A
④ PL40A
⑤ PL80A

Connection diagram

Cd-043

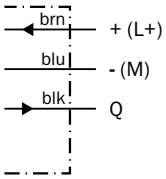

Cd-045

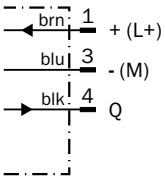

Cd-092

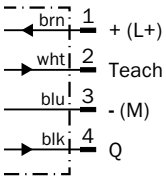

F

Recommended accessories

Plug connectors and cables

Connecting cable (female connector-open), PVC

- **Cable material:** PVC

Figure	Connection type head A	Connection type head B	Connecting cable	Enclosure rating	Model name	Part no.
	Female connector, M8, 3-pin, straight	Cable, open conductor heads	2 m, 3-wire	IP 67	DOL-0803-G02M	6010785
			5 m, 3-wire	IP 67	DOL-0803-G05M	6022009
	Female connector, M8, 3-pin, angled	Cable, open conductor heads	2 m, 3-wire	IP 67	DOL-0803-W02M	6008489
			5 m, 3-wire	IP 67	DOL-0803-W05M	6022010
	Female connector, M8, 4-pin, straight	Cable, open conductor heads	2 m, 4-wire	IP 67	DOL-0804-G02M	6009870
			5 m, 4-wire	IP 67	DOL-0804-G05M	6009872
	Female connector, M8, 4-pin, angled	Cable, open conductor heads	2 m, 4-wire	IP 67	DOL-0804-W02M	6009871
			5 m, 4-wire	IP 67	DOL-0804-W05M	6009873
	Female connector, M12, 4-pin, straight	Cable, open conductor heads	2 m, 4-wire	IP 67	DOL-1204-G02M	6009382
			5 m, 4-wire	IP 67	DOL-1204-G05M	6009866
	Female connector, M12, 4-pin, angled	Cable, open conductor heads	2 m, 4-wire	IP 67	DOL-1204-W02M	6009383
			5 m, 4-wire	IP 67	DOL-1204-W05M	6009867

Female connector (ready to assemble)

Figure	Connection type head A	Connection type head B	Connector material	Enclosure rating	Model name	Part no.
	Female connector, M8, 3-pin, straight	Screw-type terminals	PBT	IP 67	DOS-0803-G	7902077
	Female connector, M8, 3-pin, angled	Pin penetration	PBT	IP 67	DOS-0803-W	7902078
	Female connector, M8, 4-pin, straight	Screw-type terminals	PBT	IP 67	DOS-0804-G	6009974
	Female connector, M8, 4-pin, angled	Pin penetration	PBT	IP 67	DOS-0804-W	6009975
	Female connector, M12, 4-pin, straight	Screw-type terminals	PBT	IP 67	DOS-1204-G	6007302
	Female connector, M12, 4-pin, angled	Screw-type terminals	PBT	IP 67	DOS-1204-W	6007303

Male connector (ready to assemble)

F

Figure	Connection type head A	Connection type head B	Connector material	Enclosure rating	Model name	Part no.
	Male connector, M8, 3-pin, straight	Screw-type terminals	PBT	IP 67	STE-0803-G	6037322
	Male connector, M8, 4-pin, straight	Screw-type terminals	PBT	IP 67	STE-0804-G	6037323
	Male connector, M12, 4-pin, straight	Screw-type terminals	PBT	IP 67	STE-1204-G	6009932
	Male connector, M12, 4-pin, angled	Screw-type terminals	PBT	IP 67	STE-1204-W	6022084

Universal bar clamp systems

Figure	Material	Description	Model name	Part no.
	Zinc plated steel (sheet), Diecast zinc (clamp)	Plate N08 for universal clamp bracket	BEF-KHS-N08	2051607
	Stainless steel 1.4571 (sheet), Stainless steel 1.4408 (clamp)	Plate N08N for universal clamp bracket	BEF-KHS-N08N	2051616

Reflectors

Fine triple reflectors

Figure	Material	Description	Model name	Part no.
	PMMA/ABS	Fine triple, screw connection, suitable for laser sensors, 18 mm x 18 mm	PL10F	5311210
		Fine triple, screw connection, suitable for laser sensors, 38 mm x 16 mm	PL20F	5308844
	Plastic	Fine triple, chemically resistant, screw connection, suitable for laser sensors, 16 mm x 38 mm	PL20F-CHEM	5326089
	PMMA/ABS	Fine triple, screw connection, suitable for laser sensors, 56 mm x 28 mm	PL30F	5326523
		Fine triple, screw connection, suitable for laser sensors, 76 mm x 45 mm	PL81-1F	5325060

Reflective tape

Figure	Description	Model name	Part no.
	Suitable for laser sensors, self-adhesive, cut, see alignment note, 56.3 mm x 56.3 mm	REF-AC1000-56	4063030

F

Special reflectors

Figure	Material	Description	Model name	Part no.
	Stainless steel V4A (1.4404, 316L)	Stainless steel reflector, hygienic design, chemically resistant, Enclosure rating IP 69K, D12-adapter shaft, 25 mm x 25 mm	PLH25-D12	2063404
		Stainless steel reflector, hygienic design, chemically resistant, Enclosure rating IP 69K, M12-adapter thread, 25 mm x 25 mm	PLH25-M12	2063403
		Stainless steel reflector, wash-down design, chemically resistant, Enclosure rating IP 69K, screw connection, 14 mm x 14 mm	PLV14-A	2063405

→ **For additional accessories, please see page L-861**

Photoelectric sensor family with best-in-class performance

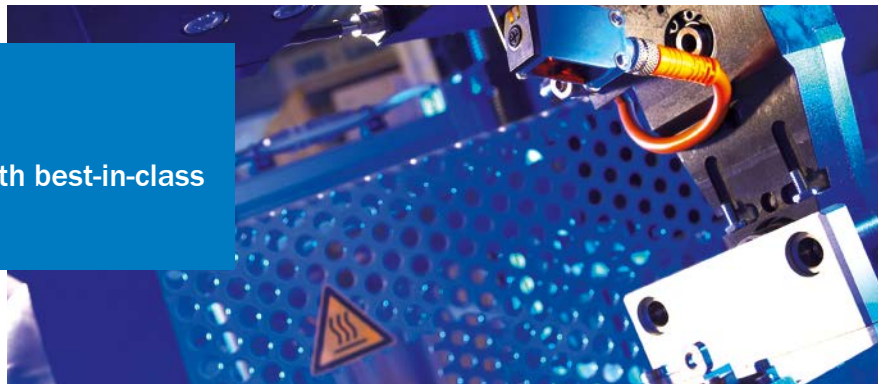

F

Product description

The W4S-3 family of photoelectric sensors offers best-in-class performance in a slim housing design. Universal use of the latest SIRIC® and PinPoint LED technologies provide maximum reliability in the detection of all objects, including transparent and shiny objects like blisters, e-cards and aluminum cans. Optical axes on the flat side enable simple, space-saving integration in the machine environment – even without separate mounting brackets.

At a glance

- Best background suppression sensor in its class
- Universal use of PinPoint LED technology in all models
- BGS proximity sensor with laser-like light spot for precise detection tasks
- Reliable setting via 5-turn potentiometer, teach-in pushbutton, teach-in via cable or IO-Link
- Flexible sensor settings, monitoring, advanced diagnostics, and visualization thanks to IO-Link

Your benefits

- Application versatility due to reliable detection of shiny, transparent or jet-black objects
- Very quick and easy alignment due to the highly visible, intense PinPoint LED light spot
- Rugged mounting system with M3 threaded metal inserts reduces maintenance costs due to a long service life
- Background suppression sensors with a laser-like light spot reduce costs and installation of additional protective measures by replacing laser sensors
- IO-Link provides easy data access from the PLC
- Quick and easy configuration
- Quick and easy integration using function blocks

Additional information

→ **www.mysick.com/en/W4S-3**
For more information, just enter the link or scan the QR code and get direct access to technical data, CAD design models, operating instructions, software, application examples and much more.

Detailed technical data

Features

	WTB4S-3	WL4S-3	WSE4S-3
Sensor principle	Photoelectric proximity sensor	Photoelectric retro-reflective sensor	Through-beam photoelectric sensor
Detection principle	Background suppression	Autocollimation	–
Dimensions (W x H x D)	12.2 mm x 41.8 mm x 17.3 mm		
Housing design (light emission)	Rectangular		
Sensing range max.	4 mm ... 180 mm [1] (depending on type)	0 m ... 5 m [2] (depending on type)	0 m ... 5 m
Sensing range	10 mm ... 180 mm [1] (depending on type)	0 m ... 3 m [2] (depending on type)	0 m ... 4.5 m
Type of light	Visible red light		
Light source [3]	PinPoint LED[2.0]		
Wave length	650 nm / 660 nm (depending on type)	650 nm	
Adjustment	Potentiometer, 5 turns, Cable, Single teach-in button (depending on type)	Single teach-in button	–

[1] Object with 90 % reflectance (referred to standard white, DIN 5033)
[2] PL80A.
[3] Average service life of 100,000 h at T_A = +25 °C.

F

Mechanics/electronics

	WTB4S-3	WL4S-3	WSE4S-3
Supply voltage [1]	10 V DC ... 30 V DC		
Ripple [2]	< 5 V_{pp}		
Power consumption	≤ 20 mA [3]		≤ 20 mA [4] [5]
Output type	PNP / NPN (depending on type)		
Output function	Complementary		–
Switching mode	Light switching / Dark-switching / Light/dark-switching (depending on type)		
Output current $I_{max.}$	≤ 100 mA		
Response time [6]	< 0.5 ms		
With IO-Link [8]	< 0.65 ms	–	
Switching frequency [7]	1,000 Hz		
Connection type	Cable, 2 m [9] / Male connector, M8 / Cable with connector, M12, 150 mm [9] (depending on type)		
Circuit protection	A [10], C [11], D [12]		
Protection class	III		
Weight	30 g		40 g
Polarisation filter	–	✔	–
IO-Link	–/✔ (COM2)	–	
Housing material	ABS		
Optics material	PMMA		

	WTB4S-3	WL4S-3	WSE4S-3
Enclosure rating	IP 66, IP 67		
Test input sender off	–		"Test" to 0 V
Ambient operating temperature	–40 °C ... +60 °C		
Ambient storage temperature	–40 °C ... +75 °C		

[1] Limit values.
[2] May not exceed or fall short of V_S tolerances.
[3] Without load.
[4] Sender.
[5] Receiver.
[6] Signal transit time with resistive load.
[7] With light/dark ratio 1:1.
[8] With light/dark ratio 1:1 in switching mode. Different values possible in COM2 mode.
[9] Do not bend below 0 °C.
[10] A = V_S connections reverse-polarity protected.
[11] C = interference suppression.
[12] D = outputs overcurrent and short-circuit protected.

Ordering information

Other models available at www.mysick.com/en/W4S-3

WTB4S-3

- **Sensor principle:** photoelectric proximity sensor
- **Detection principle:** background suppression

F

Sensing range max. [1]	Light spot size (distance)	Output type	Adjustment	Switching mode	Connection	Con-nection diagram	Model name	Part no.
4 mm ... 120 mm	Ø 2.5 mm (50 mm)	PNP	Potentiometer, 5 turns	Light switching	Cable, 3-wire, 2 m, PVC	Cd-043	WTB4S-3P1331	1042059
					Connector M8, 3-pin	Cd-045	WTB4S-3P2131	1042056
				Dark-switching	Connector M8, 3-pin	Cd-045	WTB4S-3F2131	1042060
				Light/dark-switching	Connector M8, 4-pin	Cd-083	WTB4S-3P2231	1042057
			Single teach-in button	Light switching	Cable, 3-wire, 2 m, PVC	Cd-043	WTB4S-3P1332	1052284
					Connector M8, 3-pin	Cd-045	WTB4S-3P2132	1042053
				Light/dark-switching	Connector M8, 4-pin	Cd-083	WTB4S-3P2232	1054282
			Cable, Single teach-in button [2]	Light switching	Connector M8, 4-pin	Cd-092	WTB4S-3P2234	1042050
		NPN	Potentiometer, 5 turns	Light switching	Cable, 3-wire, 2 m, PVC	Cd-043	WTB4S-3N1331	1042062
					Connector M8, 3-pin	Cd-045	WTB4S-3N2131	1042061
				Dark-switching	Cable, 3-wire, 2 m, PVC	Cd-043	WTB4S-3E1331	1042064
				Light/dark-switching	Cable, 4-wire, 2 m, PVC	Cd-094	WTB4S-3N1131	1042063
			Single teach-in button	Light switching	Cable, 3-wire, 2 m, PVC	Cd-043	WTB4S-3N1332	1042055
					Cable, 4-wire, 2 m, PVC	Cd-094	WTB4S-3N1132	1051563
			Cable, Single teach-in button [2]	Light switching	Cable, 4-wire, 2 m, PVC	Cd-093	WTB4S-3N1134	1042052
			Single teach-in button	Light/dark-switching	Connector M8, 4-pin	Cd-083	WTB4S-3N2232	1051872

[1] Object with 90 % reflectance (referred to standard white, DIN 5033)
[2] External teach-in: pulse > 2 s with voltage Uv with PNP and M with NPN.

Sensing range max. [1]	Light spot size (distance)	Output type	Adjustment	Switching mode	Connection	Con-nection diagram	Model name	Part no.
4 mm ... 180 mm	Ø 6.5 mm (150 mm)	PNP	Potentiometer, 5 turns	Light switching	Cable, 3-wire, 2 m, PVC	Cd-043	WTB4S-3P1361	1042043
					Connector M8, 3-pin	Cd-045	WTB4S-3P2161	1042040
				Dark-switching	Connector M8, 3-pin	Cd-045	WTB4S-3F2161	1042044
				Light/dark-switching	Connector M8, 4-pin	Cd-083	WTB4S-3P2261	1042041
		NPN	Potentiometer, 5 turns	Light switching	Cable, 3-wire, 2 m, PVC	Cd-043	WTB4S-3N1361	1042046
					Connector M8, 3-pin	Cd-045	WTB4S-3N2161	1042045
				Dark-switching	Cable, 3-wire, 2 m, PVC	Cd-043	WTB4S-3E1361	1042047

[1] Object with 90 % reflectance (referred to standard white, DIN 5033)

[2] External teach-in: pulse > 2 s with voltage Uv with PNP and M with NPN.

WTB4S-3 health output

- **Sensor principle:** photoelectric proximity sensor
- **Detection principle:** background suppression

Sensing range max. [1]	Light spot size (distance)	Output type	Adjustment	Switching mode	Connection	Con-nection diagram	Model name	Part no.
4 mm ... 120 mm	Ø 2.5 mm (50 mm)	NPN	Potentiometer, 5 turns	Light switching	Cable, 3-wire, 2 m, PVC	Cd-043	WTB4S-3W1331	1050573

[1] Object with 90 % reflectance (referred to standard white, DIN 5033)

F

WTB4SC-3 IO-Link

- **Sensor principle:** photoelectric proximity sensor
- **Detection principle:** background suppression
- **Light spot size (distance):** Ø 6.5 mm (150 mm)
- **Output type):** PNP
- **Switching mode:** light/dark-switching (parametrisable via IO-Link)

Sensing range max. [1]	Adjust-ment	IO-Link	Advanced functions	Connection	Con-nection diagram	Model name	Part no.
4 mm ... 180 mm	Cable, Single teach-in button	Standard functions	–	Connector M8, 4-pin	Cd-098	WTB4SC-3P2262	1042033
		Standard functions, advanced function	Timer, False Tripping Suppression (Debouncing)			WTB4SC-3P2262A70	1067756
			High-Speed Counter, False Tripping Suppression (Debouncing)			WTB4SC-3P2262A71	1067757
			Time Stamp, False Tripping Suppression (Debouncing)			WTB4SC-3P2262A91	1067758

[1] Object with 90 % reflectance (referred to standard white, DIN 5033)

WL4S-3

- **Sensor principle:** photoelectric retro-reflective sensor
- **Detection principle:** autocollimation

Sensing range max. [1]	Light spot size (distance)	Output type	Adjustment	Switching mode	Connection	Con-nection diagram	Model name	Part no.
0 m ... 4 m	Ø 45 mm (1.5 m)	PNP	–	Light switching	Connector M8, 3-pin	Cd-045	WL4S-3P2130	1042069
				Dark-switching	Cable, 3-wire, 2 m, PVC	Cd-043	WL4S-3F1330	1042068
					Connector M8, 3-pin	Cd-045	WL4S-3F2130	1042065
				Light/dark-switching	Connector M8, 4-pin	Cd-083	WL4S-3P2230	1042066
		NPN	–	Light switching	Cable, 3-wire, 2 m, PVC	Cd-043	WL4S-3N1330	1042073
				Dark-switching	Cable, 3-wire, 2 m, PVC	Cd-043	WL4S-3E1330	1042072
					Connector M8, 3-pin	Cd-045	WL4S-3E2130	1042071
0 m ... 5 m	Ø 45 mm (1.5 m)	PNP	Single teach-in button	Light switching	Connector M8, 3-pin	Cd-045	WL4S-3P2132	1042077
				Dark-switching	Cable, 3-wire, 2 m, PVC	Cd-043	WL4S-3F1332	1042076
					Connector M8, 3-pin	Cd-045	WL4S-3F2132	1042074
				Light/dark-switching	Connector M8, 4-pin	Cd-083	WL4S-3P2232	1042078
		NPN	Single teach-in button	Light switching	Cable, 3-wire, 2 m, PVC	Cd-043	WL4S-3N1332	1042082
				Dark-switching	Cable, 3-wire, 2 m, PVC	Cd-043	WL4S-3E1332	1042081
					Connector M8, 3-pin	Cd-045	WL4S-3E2132	1042080
					Cable, 4-wire, 2 m, PVC	Cd-107	WL4S-3W1132	1042083

[1] PL80A.

F

WL4S-3 IO-Link

- **Sensor principle:** photoelectric retro-reflective sensor
- **Detection principle:** autocollimation
- **Light spot size:** Ø 2 mm (20 mm)
- **Output type:** PNP
- **Switching mode:** light/dark-switching
- **Switching frequency:** 2,000 Hz
- **Response time:** 0.25 ms

Sensing range max. [1]	Adjust-ment	IO-Link	Advanced functions	Connection	Con-nection diagram	Model name	Part no.
0 mm ... 70 mm	Cable, single teach-in button	Standard functions	–	Connector M8, 4-pin	Cd-098	WL4SC-3P2232	1065315
		Standard functions, Advanced functions	Timer, False Tripping Suppression (Debouncing)			WL4SC-3P2232A70	1067760
			High-Speed Counter, False Tripping Suppression (Debouncing)			WL4SC-3P2232A71	1067761
			Time Stamp, False Tripping Suppression (Debouncing)			WL4SC-3P2232A91	1067762

[1] PL80A.

WL4S-3 health output

- **Sensor principle:** photoelectric retro-reflective sensor
- **Detection principle:** autocollimation

Sensing range max. [1]	Light spot size (distance)	Output type	Adjustment	Switching mode	Connection	Con-nection diagram	Model name	Part no.
0 m ... 5 m	Ø 45 mm (1.5 m)	PNP	Single teach-in button	Dark-switching	Connector M8, 4-pin	Cd-107	WL4S-3V2232	1042079

[1] PL80A.

WSE4S-3

- **Sensor principle:** through-beam photoelectric sensor

Sensing range max.	Light spot size (distance)	Output type	Switching mode	Connection	Con-nection diagram	Model name	Part no.
0 m ... 5 m	Ø 50 mm (2 m)	PNP	Light switching	Connector M8, 3-pin	Cd-069	WSE4S-3P2130	1052892
			Dark-switching	Cable, 3-wire, 2 m, PVC	Cd-061	WSE4S-3F1330	1052879
				Connector M8, 3-pin	Cd-069	WSE4S-3F2130	1052890
		NPN	Light switching	Cable, 3-wire, 2 m, PVC	Cd-061	WSE4S-3N1330	1052872
			Dark-switching	Cable, 3-wire, 2 m, PVC	Cd-061	WSE4S-3E1330	1052867
				Connector M8, 3-pin	Cd-069	WSE4S-3E2130	1052876

WSE4S-3, IO-Link

- **Sensor principle:** through-beam photoelectric sensor
- **Light spot size:** Ø 50 mm (2 m)
- **Output type:** PNP
- **Switching mode:** light/dark-switching
- **Connection:** connector M8, 4-pin

Sensing range max.	IO-Link	Advanced functions	Connection	Con-nection diagram	Model name	Part no.
0 m ... 5 m	Standard functions	–	Connector M8, 4-pin	Cd-268	WSE4SC-3P2230	1067767
	Standard functions, Advanced functions	Timer, False Tripping Suppression (Debouncing)			WSE4SC-3P2230A70	1067768
		High-Speed Counter, False Tripping Suppression (Debouncing)			WSE4SC-3P2230A71	1067769
		Time Stamp, False Tripping Suppression (Debouncing)			WSE4SC-3P2230A91	1067770

F

Dimensional drawings

Dimensions in mm (inch)

WTB4S-3, potentiometer

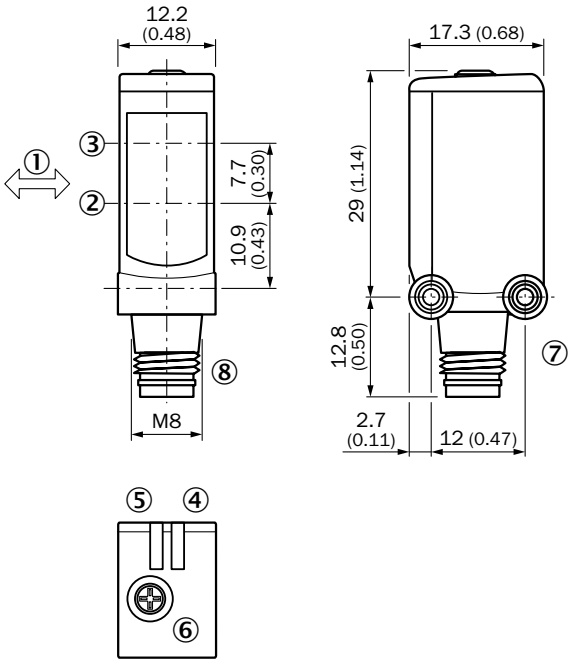

① Standard direction of the material being detected
② Optical axis receiver
③ Optical axis sender
④ Status indicator LED green: power on
⑤ Status indicator LED, yellow: Status of received light beam
⑥ Potentiometer
⑦ Threaded mounting hole M3
⑧ Connection

F

WTB4S-3, Single teach-in button

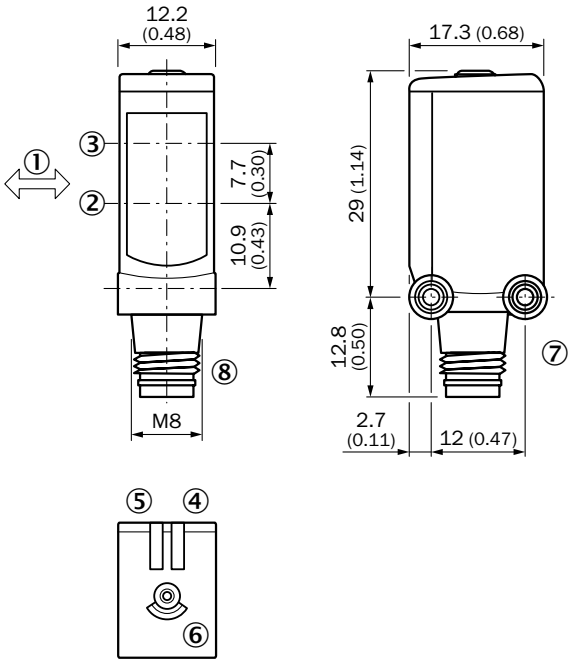

① Standard direction of the material being detected
② Optical axis receiver
③ Optical axis sender
④ Status indicator LED green: power on
⑤ Status indicator LED, yellow: Status of received light beam
⑥ Teach-in button
⑦ Threaded mounting hole M3
⑧ Connection

WL4S-3, WSE4S-3, potentiometer

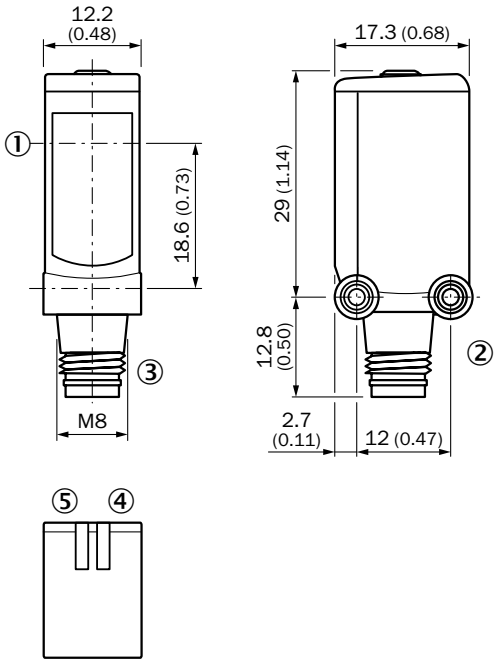

① Center of optical axis
② Threaded mounting hole M3
③ Connection
④ Status indicator LED green: power on
⑤ Status indicator LED, yellow: Status of received light beam

WL4S-3, WLG4S-3, single teach-in button

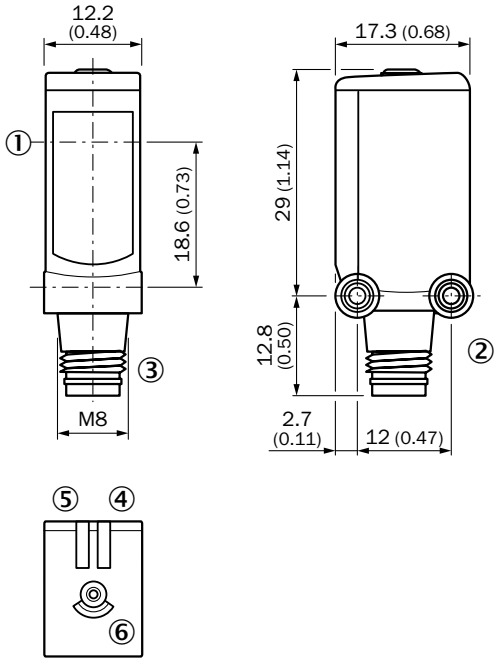

① Center of optical axis
② Threaded mounting hole M3
③ Connection
④ Status indicator LED green: power on
⑤ LED indicator orange: status of received light beam
⑥ Teach-in button

Characteristic curves

F

Black-white shift

WTB4S-3, 120 mm

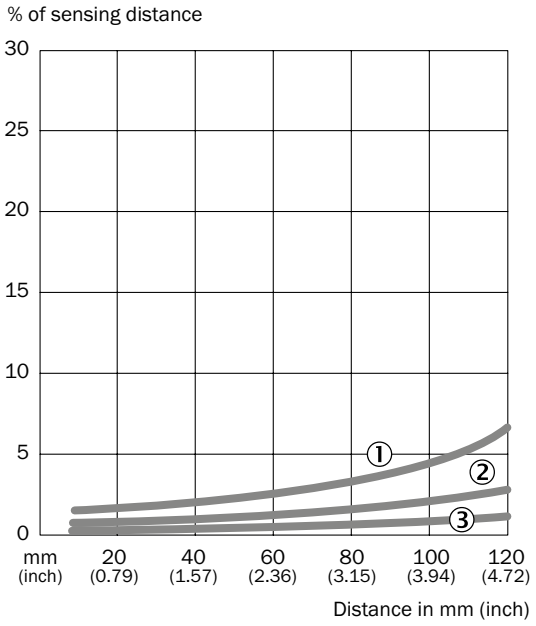

① Sensing range on black, 6 % remission
② Sensing range on gray, 18 % remission
③ Sensing range on white, 90 % remission

WTB4S-3, 180 mm

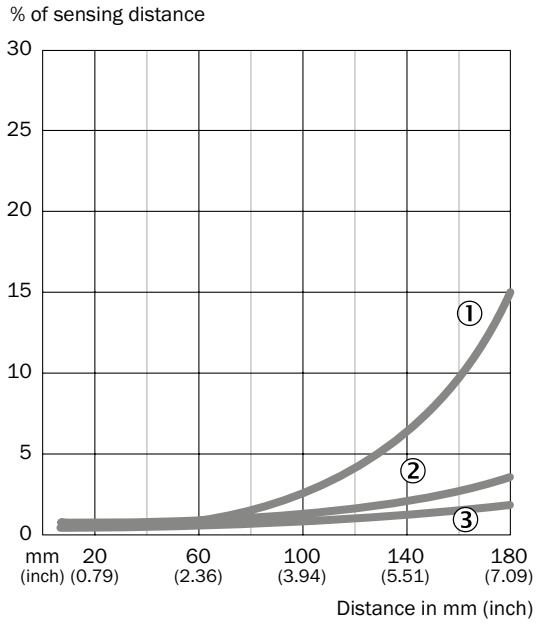

① Sensing range on black, 6 % remission
② Sensing range on gray, 18 % remission
③ Sensing range on white, 90 % remission

Operating reserve

WL4S-3

Operating reserve

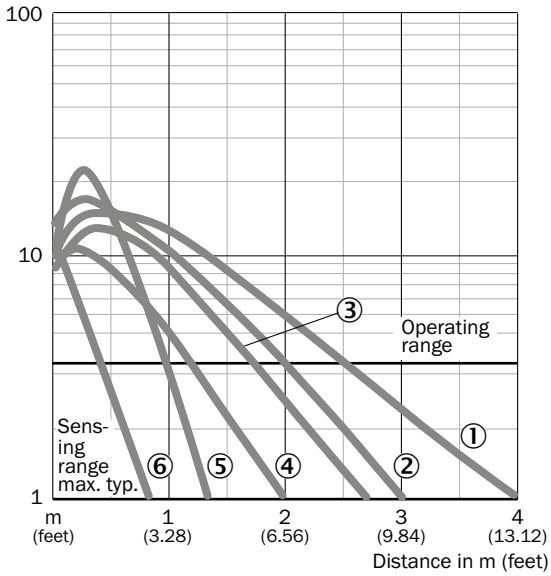

WSE4S-3

Operating reserve

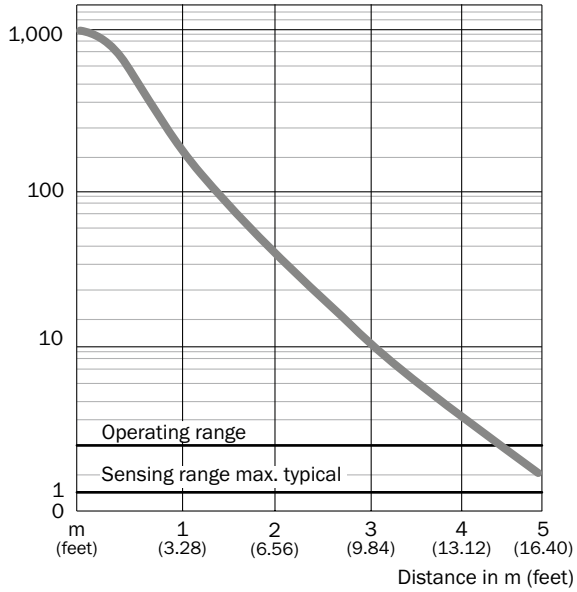

① PL80A
② P250F
③ PL40A
④ PL20F
⑤ PL10F
⑥ REF-IRF-56

F

Bar diagrams

WTB4S-3, 120 mm

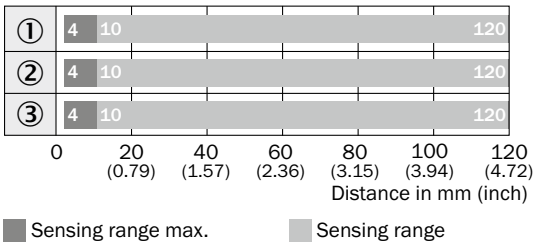

① Sensing range on black, 6 % remission
② Sensing range on gray, 18 % remission
③ Sensing range on white, 90 % remission

WTB4S-3, 180 mm

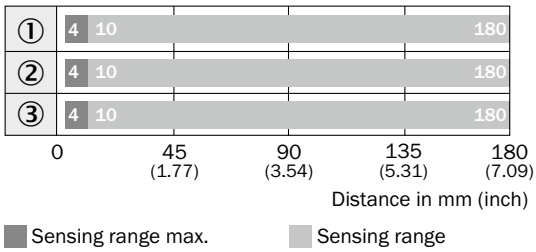

① Sensing range on black, 6 % remission
② Sensing range on gray, 18 % remission
③ Sensing range on white, 90 % remission

WL4S-3, 4 m

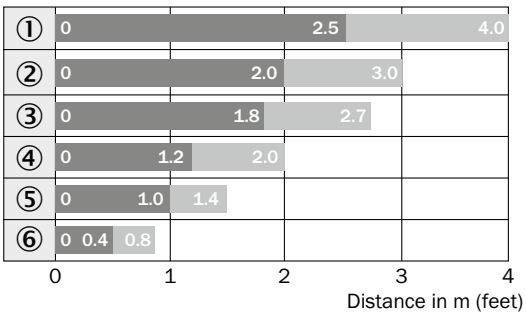

Sensing range Sensing range max.

① PL80A
② P250F
③ PL40A
④ PL20F
⑤ PL10F
⑥ REF-IRF-56

WL4S-3, 5 m

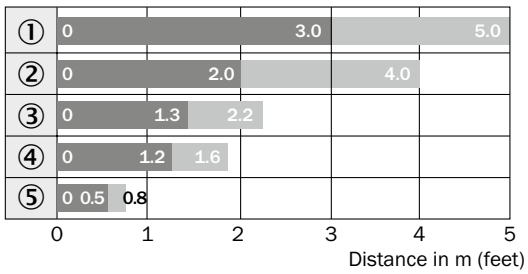

Sensing range Sensing range max.

① PL80A
② PL40A
③ PL20A
④ PL10F
⑤ REF-IRF-56

WSE4S-3

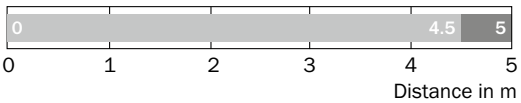

Sensing range typ. max Sensing range

F

Connection diagram

Cd-043

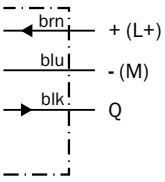

Cd-045

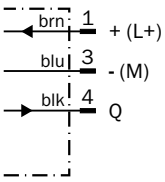

Cd-061

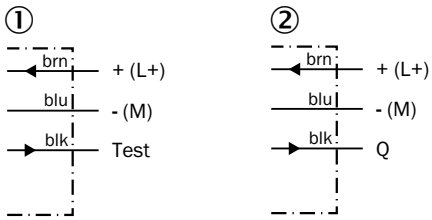

① Sender
② Receiver

Cd-069

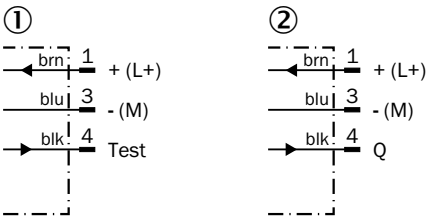

① Sender
② Receiver

Cd-083

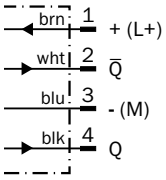

Cd-092

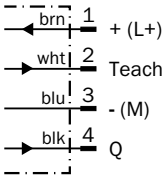

Cd-093

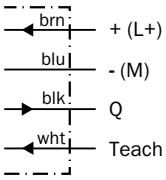

Cd-094

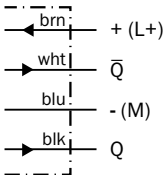

Cd-098

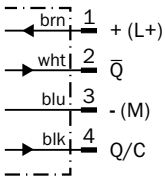

Cd-107

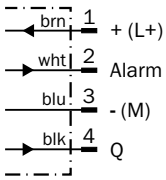

Cd-268

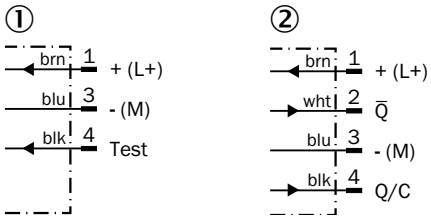

① Sender
② Receiver

Recommended accessories

Plug connectors and cables

F

Connecting cable (female connector-open), PVC

- **Cable material:** PVC
- **Connector material:** TPU

Figure	Connection type head A	Connection type head B	Connecting cable	Enclosure rating	Model name	Part no.
	Female connector, M8, 3-pin, straight	Cable, open conductor heads	2 m, 3-wire	IP 67	DOL-0803-G02M	6010785
			5 m, 3-wire	IP 67	DOL-0803-G05M	6022009
	Female connector, M8, 3-pin, angled	Cable, open conductor heads	2 m, 3-wire	IP 67	DOL-0803-W02M	6008489
			5 m, 3-wire	IP 67	DOL-0803-W05M	6022010
	Female connector, M8, 4-pin, straight	Cable, open conductor heads	2 m, 4-wire	IP 67	DOL-0804-G02M	6009870
			5 m, 4-wire	IP 67	DOL-0804-G05M	6009872
	Female connector, M8, 4-pin, angled	Cable, open conductor heads	2 m, 4-wire	IP 67	DOL-0804-W02M	6009871
			5 m, 4-wire	IP 67	DOL-0804-W05M	6009873
	Female connector, M12, 4-pin, straight	Cable, open conductor heads	2 m, 4-wire	IP 67	DOL-1204-G02M	6009382
			5 m, 4-wire	IP 67	DOL-1204-G05M	6009866
	Female connector, M12, 4-pin, angled	Cable, open conductor heads	2 m, 4-wire	IP 67	DOL-1204-W02M	6009383
			5 m, 4-wire	IP 67	DOL-1204-W05M	6009867

Universal bar clamp systems

Figure	Material	Description	Model name	Part no.
	Zinc plated steel (sheet), Diecast zinc (clamp)	Plate N08 for universal clamp bracket	BEF-KHS-N08	2051607

Device protection (mechanical)

Protective housing/tubes

Figure	Material	Description	Model name	Part no.
	Stainless steel 1.4571	Safety bracket for floor mounting	BEF-SW-W4S	2051497

Reflectors

Angular

Figure	Material	Description	Model name	Part no.
	PMMA/ABS	Rectangular, screw connection, 47 mm x 47 mm	P250	5304812
		Rectangular, screw connection, 38 mm x 15 mm	PL20A	1012719
		Rectangular, screw connection, 56 mm x 28 mm	PL30A	1002314
		Rectangular, screw connection, 37 mm x 56 mm	PL40A	1012720
		Rectangular, screw connection, 80 mm x 80 mm	PL80A	1003865

Fine triple reflectors

Figure	Material	Description	Model name	Part no.
	PMMA/ABS	Fine triple, screw connection, suitable for laser sensors, 18 mm x 18 mm	PL10F	5311210

Reflective tape

Figure	Description	Model name	Part no.
	Self-adhesive, 50 mm x 60 mm	REF-IRF-56	5314244

Round

Figure	Material	Description	Model name	Part no.
	PMMA/ABS	Round, plugable for metal plates	PL22-3	1004488

→ **For additional accessories, please see page L-861**

F

Slim photoelectric sensors reliably detect transparent objects

F

Product description

The WLG4S-3 is a retro-reflective sensor enclosed in a slim housing that reliably detects transparent objects. Even small gaps between objects, highly transparent thin films, and vials with flow marks and severe lens defects can be reliably detected. Setting the sensor requires a single press of the teach-in pushbutton. The sensor reliably adjusts for any changes to environmental conditions such as temperature, dust or dirt. The single-lens autocollimation system "sees" through even the smallest of openings. The PinPoint LED's small but intense light spot enables quick and easy alignment even when using the smallest reflectors. Plus, variants with IO-Link provide continuous diagnostics data.

At a glance

- Continuous threshold adaption (AutoAdapt) of the switching threshold compensates for environmental changes
- Single-lens autocollimation optics
- Simple setting either via teach-in pushbutton, cable or IO-Link
- PinPoint LED technology with a small, highly visible, well-defined light spot enables high reserve levels when using small reflectors
- Flexible sensor settings, monitoring, advanced diagnostics, and visualization thanks to IO-Link

Your benefits

- Optimal detection of any kind of transparent object
- Quick and easy operation via the push of a button – automatic setting of the correct switching threshold
- Less downtime due to a Continuous threshold adaption (AutoAdapt) which compensates for changing environmental conditions, including temperature, dust and drift effects
- The well-defined, highly visible intense light spot provides quick and reliable alignment
- IO-Link provides easy data access from the PLC
- Quick and easy configuration
- Quick and easy integration using function blocks
- Easy device replacement and identification

Additional information

→ **www.mysick.com/en/W4S-3_Glass**
For more information, just enter the link or scan the QR code and get direct access to technical data, CAD design models, operating instructions, software, application examples and much more.

Detailed technical data

Features

Sensor principle	Photoelectric retro-reflective sensor
Detection principle	Autocollimation
Dimensions (W x H x D)	12.2 mm x 41.8 mm x 17.3 mm
Housing design (light emission)	Rectangular
Sensing range max. [1]	0.01 m ... 5 m
Sensing range [1]	0 m ... 3 m
Type of light	Visible red light
Light source [2]	PinPoint LED
Light spot size (distance)	Ø 45 mm (1.5 m)
Wave length	650 nm
Adjustment	Cable, Single teach-in button / Single teach-in button (depending on type)
Continuous threshold adaption (AutoAdapt)	✔
Special feature	Detection of transparent objects

[1] PL80A.
[2] Average service life of 100,000 h at T_A = +25 °C.

Mechanics/electronics

Supply voltage [1]	10 V DC ... 30 V DC
Ripple [2]	< 5 V_{pp}
Power consumption	≤ 20 mA [3]
With IO-Link	≤ 30 mA [3]
Output type	PNP / NPN (depending on type)
Switching mode	Light switching / Dark-switching / Light/dark-switching (depending on type)
Output current $I_{max.}$	≤ 100 mA
Response time [4]	< 0.5 ms
Switching frequency [5]	1,000 Hz
Angle of reception	30°
Attenuation along light beam	> 8 %
Connection type	Male connector, M8 / Cable, 2 m [6] (depending on type)
Circuit protection	A [7], C [8], D [9]
Protection class	III
Weight	30 g
Polarisation filter	✔
IO-Link	✔
Housing material	ABS
Optics material	PMMA
Enclosure rating	IP 66, IP 67
Ambient operating temperature	–40 °C ... +60 °C
Ambient storage temperature	–40 °C ... +75 °C

[1] Limit values.
[2] May not exceed or fall short of V_S tolerances.
[3] Without load.
[4] Signal transit time with resistive load.
[5] With light/dark ratio 1:1.
[6] Do not bend below 0 °C.
[7] A = V_S connections reverse-polarity protected.
[8] C = interference suppression.
[9] D = outputs overcurrent and short-circuit protected.

F

Ordering information

Other models available at www.mysick.com/en/W4S-3_Glass

WLG4S-3

- **Detection principle:** autocollimation
- **Polarisation filter:** ✔

Sensing range max. [1]	Output type	Switching mode	Adjustment	Connection	Connection diagram	Model name	Part no.
0.01 m ... 5 m	PNP	Light switching	Cable, Single teach-in button	Connector M8, 4-pin	Cd-092	WLG4S-3P2234	1052999
		Dark-switching	Cable, Single teach-in button	Connector M8, 4-pin	Cd-092	WLG4S-3F2234	1042084
		Light/dark-switching	Single teach-in button	Connector M8, 4-pin	Cd-083	WLG4S-3P2232	1044186
	NPN	Light switching	Single teach-in button	Cable, 3-wire, 2 m, PVC	Cd-044	WLG4S-3N1332	1046111
		Dark-switching	Cable, Single teach-in button	Cable, 4-wire, 2 m, PVC	Cd-044	WLG4S-3E1134	1042085

[1] PL80A.

WLG4S-3 Alarm output

- **Detection principle:** autocollimation
- **Polarisation filter:** ✔

Sensing range max. [1]	Output type	Switching mode	Adjustment	Connection	Connection diagram	Model name	Part no.
0.01 m ... 5 m	PNP	Dark-switching	Single teach-in button	Cable, 4-wire, 2 m, PVC	Cd-107	WLG4S-3V1132	1055895
				Connector M8, 4-pin	Cd-107	WLG4S-3V2232	1042087
	NPN	Dark-switching	Single teach-in button	Cable, 4-wire, 2 m, PVC	Cd-107	WLG4S-3W1132	1042086

[1] PL80A.

F

WLG4S-3 IO-Link

- **Detection principle:** autocollimation
- **Output type:** PNP
- **Switching mode:** light/dark-switching
- **Polarisation filter:** ✔

Sensing range max. [1]	Adjust-ment	IO-Link	Advanced functions	Connection	Connection diagram	Model name	Part no.
0.01 m ... 5 m	Single teach-in button	Standard functions	–	Connector M8, 4-pin	Cd-098	WLG4SC-3P2232	1057177
		Standard functions, Advanced functions	Timer, False Tripping Suppression (Debouncing)			WLG4SC-3P2232A70	1067763
			High-Speed Counter, False Tripping Suppression (Debouncing)			WLG4SC-3P2232A71	1067765
			Time Stamp, False Tripping Suppression (Debouncing)			WLG4SC-3P2232A91	1067766

[1] PL80A.

Dimensional drawings

Dimensions in mm (inch)

WLG4S-3, single teach-in button

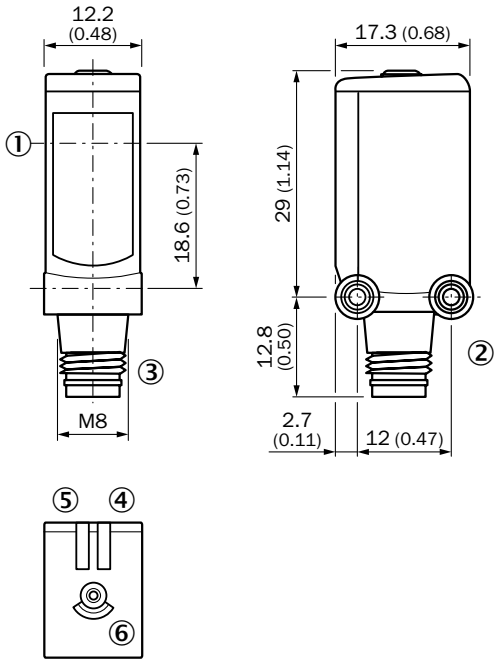

① Center of optical axis
② Threaded mounting hole M3
③ Connection
④ Status indicator LED green: power on
⑤ LED indicator orange: status of received light beam
⑥ Teach-in button

F

Characteristic curves

WLG4S-3, 5 m

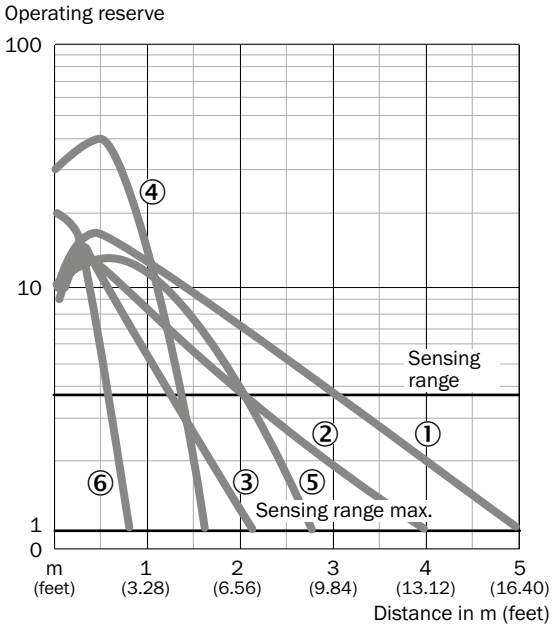

① PL80A
② PL40A
③ PL20A
④ PL10F
⑤ P250 CHEM
⑥ REF-IRF-56

Bar diagrams

WLG4S-3, 5 m

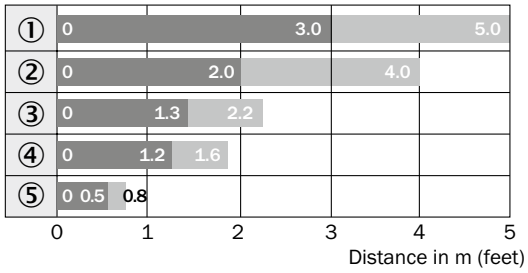

Sensing range
Sensing range max.

① PL80A
② PL40A
③ PL20A
④ PL10F
⑤ REF-IRF-56

Connection diagram

Cd-044

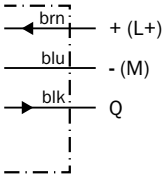

Cd-083

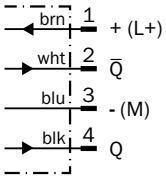

Cd-092

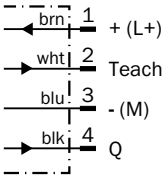

Cd-098

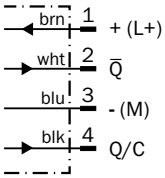

Cd-107

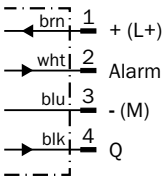

Recommended accessories

F

Plug connectors and cables

Connecting cable (female connector-open)M8, 4-pin, PVC

- **Cable material:** PVC
- **Connector material:** PVC

Figure	Connection type head A	Connection type head B	Connecting cable	Enclosure rating	Model name	Part no.
	Female connector, M8, 4-pin, straight	Cable, open conductor heads	2 m, 4-wire	IP 67	DOL-0804-G02M	6009870
			5 m, 4-wire	IP 67	DOL-0804-G05M	6009872
	Female connector, M8, 4-pin, angled	Cable, open conductor heads	2 m, 4-wire	IP 67	DOL-0804-W02M	6009871
			5 m, 4-wire	IP 67	DOL-0804-W05M	6009873

Universal bar clamp systems

Figure	Material	Description	Model name	Part no.
	Zinc plated steel (sheet), Diecast zinc (clamp)	Plate N02 for universal clamp bracket	BEF-KHS-N02	2051608
	Stainless steel 1.4571 (sheet), Stainless steel 1.4408 (clamp)	Plate N02N for universal clamp bracket	BEF-KHS-N02N	2051618
	Zinc plated steel (sheet), Diecast zinc (clamp)	Plate N08 for universal clamp bracket	BEF-KHS-N08	2051607
	Stainless steel 1.4571 (sheet), Stainless steel 1.4408 (clamp)	Plate N08N for universal clamp bracket	BEF-KHS-N08N	2051616

Device protection (mechanical)

Protective housing/tubes

Figure	Material	Description	Model name	Part no.
	Stainless steel 1.4571	Safety bracket for floor mounting	BEF-SW-W4S	2051497

Reflectors

Angular

Figure	Material	Description	Model name	Part no.
	PMMA/ABS	Rectangular, screw connection, 80 mm x 80 mm	PL80A	1003865

Fine triple reflectors

Figure	Material	Description	Model name	Part no.
	PMMA/ABS	Fine triple, screw connection, suitable for laser sensors, 47 mm x 47 mm	P250F	5308843
		Fine triple, screw connection, suitable for laser sensors, 18 mm x 18 mm	PL10F	5311210
	Plastic	Fine triple, chemically resistant, screw connection, 18 mm x 18 mm	PL10F CHEM	5321636
	PMMA/ABS	Fine triple, screw connection, suitable for laser sensors, 38 mm x 16 mm	PL20F	5308844
	Plastic	Fine triple, chemically resistant, screw connection, suitable for laser sensors, 16 mm x 38 mm	PL20F-CHEM	5326089
	PMMA/ABS	Fine triple, screw connection, suitable for laser sensors, 56 mm x 28 mm	PL30F	5326523
		Fine triple, screw connection, suitable for laser sensors, 76 mm x 45 mm	PL81-1F	5325060

Reflective tape

Figure	Description	Model name	Part no.
	Suitable for laser sensors, self-adhesive, cut, see alignment note, 56.3 mm x 56.3 mm	REF-AC1000-56	4063030

Special reflectors

Figure	Material	Description	Model name	Part no.
	Stainless steel V4A (1.4404, 316L)	Stainless steel reflector, hygienic design, chemically resistant, Enclosure rating IP 69K, D12-adapter shaft, 25 mm x 25 mm	PLH25-D12	2063404
		Stainless steel reflector, hygienic design, chemically resistant, Enclosure rating IP 69K, M12-adapter thread, 25 mm x 25 mm	PLH25-M12	2063403
		Stainless steel reflector, wash-down design, chemically resistant, Enclosure rating IP 69K, screw connection, 14 mm x 14 mm	PLV14-A	2063405

→ **For additional accessories, please see page L-861**

F

Laser precision for very small or transparent objects

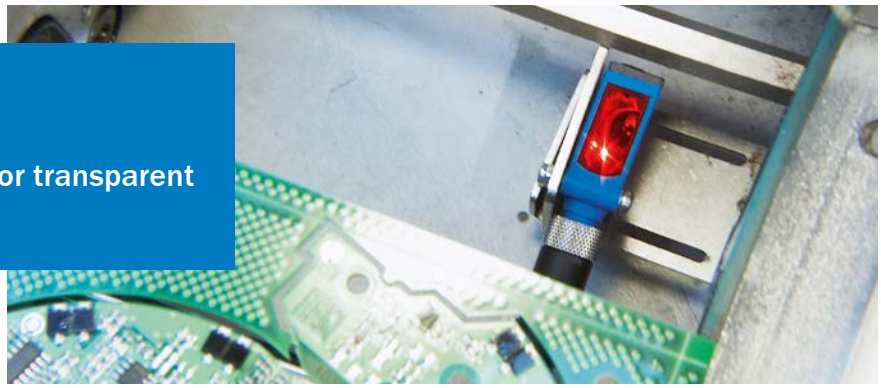

F

Product description

Maximum performance for handling demanding detection tasks involving tiny objects. With its precise laser light spot, the W4SL-3 miniature product family sets new standards by providing high optical light immunity from undesired background reflections and immunity to ambient light – even from modern energy-saving lamps. The combination of SICK's proprietary laser and SIRIC® technologies reduces incorrect switching to minimize machine downtime, reducing the variety of devices and saving on storage costs. The photoelectric sensors also provide an IO-Link interface for initial system performance diagnostics. Furthermore, IO-Link permits the integration of additional functions such as meters directly into the sensor. There is no need for complex control programming.

At a glance

- Precise laser light spot, laser class 1
- Teach-in pushbutton can be switched between detection of transparent and non-transparent objects
- Sensing ranges between 25 mm and 60 m
- Latest SIRIC® and laser technologies with second emitter LED to provide outstanding background suppression and ambient light immunity
- Choice of adjustment via teach-in button, potentiometer, cable, or IO-Link

Your benefits

- Precise laser light spot for highly accurate switching behavior
- High optical ambient light immunity reduces incorrect switching and thus machine downtime, even when modern energy-saving lamps are used
- The highest degree of machine design flexibility BGS (background suppression) eliminates the effect of undesired background reflections. In addition, autocollimation allows detection through small drilled holes
- One device for detecting both transparent objects and the smallest non-transparent objects, thus reducing the variety of sensors and saving on storage costs
- IO-Link facilitates initial system performance diagnostics and uses additional sensor functions (optional) to reduce complex control programming

Additional information

→ **www.mysick.com/en/W4SL-3**
For more information, just enter the link or scan the QR code and get direct access to technical data, CAD design models, operating instructions, software, application examples and much more.

Detailed technical data

Features

	WTB4SL-3	WL4SL-3	WSE4SL-3
Sensor principle	Photoelectric proximity sensor	Photoelectric retro-reflective sensor	Through-beam photoelectric sensor
Detection principle	Background suppression	Autocollimation	–
Dimensions (W x H x D)	12.2 mm x 41.8 mm x 17.3 mm		
Housing design (light emission)	Rectangular		
Mounting hole	M3		
Sensing range max.	25 mm ... 300 mm [1]	0 m ... 12 m [2]	0 m ... 60 m
Sensing range	25 mm ... 300 mm [1]	0 m ... 8 m [2]	0 m ... 50 m
Type of light	Visible red light		
Light source [3]	Laser		
Light spot size (distance)	Ø 1 mm (170 mm)	Ø 1 mm (500 mm)	
Wave length	650 nm		
Laser class [4]	1		
Adjustment	Potentiometer, 5 turns	Single teach-in button / Cable, Single teach-in button [5] (depending on type)	Single teach-in button
Special feature	–	IO-Link	–

[1] Object with 90 % reflectance (referred to standard white, DIN 5033)
[2] PL80A.
[3] Average service life 50,000 h at T_A = +25 °C.
[4] EN60825-1:2008-05 & IEC 60825-1:2007-03 / CDRH 21 CFR 1040.10 & 1040.11
[5] Adjustment via cable (ET): white cable or PIN2 according to the desired sensitivity > 2 ... < 8 s or put > 8 s on L+ (PNP) or on M (NPN)

F

Mechanics/electronics

	WTB4SL-3	WL4SL-3	WSE4SL-3
Supply voltage [1]	10 V DC ... 30 V DC		
Ripple [2]	< 5 V_{pp}		
Power consumption [3]	≤ 30 mA		
Output type	PNP / NPN (depending on type)		
Output function	Complementary		
Switching mode	Light/dark-switching [4] / Dark-switching [5] (depending on type)		
Output current $I_{max.}$	≤ 100 mA		
Response time [6]	≤ 0.5 ms		
Switching frequency [7]	1,000 Hz		
Connection type	Cable, 2 m [8] / Male connector, M8 / Cable with connector, M8, 120 mm [8] (depending on type)		
Circuit protection	A [9], B [10], C [11]		
Protection class	III		
Weight	100 g		
Polarisation filter	–	✔	–
IO-Link	–	–/✔ (COM2) (depending on type)	–
Housing material	Bayblend		
Optics material	PMMA		

	WTB4SL-3	WL4SL-3	WSE4SL-3
Enclosure rating	IP 66, IP 67		
Ambient operating temperature	–10 °C ... +50 °C		
Ambient operating temperature extended [12] [13]	–30 °C ... +55 °C		
Ambient storage temperature	–30 °C ... +70 °C		

[1] Limit values, operation in short-circuit protected network max. 8 A.
[2] May not exceed or fall short of V_S tolerances.
[3] Without load.
[4] Q = light-switching.
[5] Q = dark-switching.
[6] Signal transit time with resistive load.
[7] With light/dark ratio 1:1.
[8] Do not bend below 0 °C.
[9] A = V_S connections reverse-polarity protected.
[10] B = inputs and output reverse-polarity protected.
[11] C = interference suppression.
[12] As of T_a = 50 °C, a max. supply voltage $V_{max.}$ = 24 V and a max. load current $I_{max.}$ = 50 mA is permitted.
[13] Using the sensor below T_a = –10 °C is possible, if the sensor is turned on at T_a > –10 °C, then the environment cools down and the sensor is not disconnected from the supply voltage during the whole time. It is not allowed to turn on the sensor below T_a = –10 °C.

Ordering information

Other models available at www.mysick.com/en/W4SL-3

F

WTB4SL-3

- **Sensor principle:** photoelectric proximity sensor

Sensing range max. [1]	Output type	Switching mode	Adjustment	Connection	Connection diagram	Model name	Part no.
25 mm ... 300 mm	PNP	Light/dark-switching [2]	Potentiometer, 5 turns	Cable, 4-wire, 2 m, PVC	Cd-094	WTB4SL-3P1161	1058239
				Connector M8, 4-pin	Cd-083	WTB4SL-3P2261	1058237
				Cable with connector M8, 4-pin, 120 mm, PVC	Cd-083	WTB4SL-3P3261	1058238
	NPN	Light/dark-switching [2]	Potentiometer, 5 turns	Cable, 4-wire, 2 m, PVC	Cd-094	WTB4SL-3N1161	1058242
				Connector M8, 4-pin	Cd-083	WTB4SL-3N2261	1058240
				Cable with connector M8, 4-pin, 120 mm, PVC	Cd-083	WTB4SL-3N3261	1058241

[1] Object with 90 % reflectance (referred to standard white, DIN 5033)
[2] Q = light-switching.

WL4SL-3

- **Sensor principle:** photoelectric retro-reflective sensor

Sensing range max. [1]	Output type	Switching mode	Adjustment	Connection	Connection diagram	Model name	Part no.
0 m ... 12 m	PNP	Light/dark-switching [2]	Single teach-in button	Connector M8, 4-pin	Cd-083	WL4SL-3P2232	1061561
				Cable with connector M8, 4-pin, 120 mm, PVC	Cd-083	WL4SL-3P3232	1061563
		Dark-switching [3]	Cable, Single teach-in button [4]	Connector M8, 4-pin	Cd-195	WL4SL-3F2234	1061562
				Cable with connector M8, 4-pin, 120 mm, PVC	Cd-195	WL4SL-3F3234	1061564
	NPN	Light/dark-switching [2]	Single teach-in button	Cable, 4-wire, 2 m, PVC	Cd-094	WL4SL-3N1132	1061565
		Dark-switching [3]	Cable, Single teach-in button [4]	Cable, 4-wire, 2 m, PVC	Cd-212	WL4SL-3E1134	1061566

[1] PL80A.
[2] Q = light-switching.
[3] Q = dark-switching.
[4] Adjustment via cable (ET): white cable or PIN2 according to the desired sensitivity > 2 ... < 8 s or put > 8 s on L+ (PNP) or on M (NPN)

WL4SL-3, IO-Link

- **Sensor principle:** photoelectric retro-reflective sensor

Sensing range max. [1]	Output type	Switching mode	Adjustment	IO-Link	Connection	Connection diagram	Model name	Part no.
0 m ... 12 m	PNP	Light/dark-switching [2]	Single teach-in button	✔	Connector M8, 4-pin	Cd-083	WL4SLC-3P2232	1061569

[1] PL80A.
[2] Q = light-switching.

WSE4SL-3

- **Sensor principle:** through-beam photoelectric sensor

Sensing range max.	Output type	Switching mode	Adjustment	Connection	Connection diagram	Model name	Part no.
0 m ... 60 m	PNP	Light/dark-switching [1]	Single teach-in button	Connector M8, 4-pin	Cd-232	WSE4SL-3P2237	1058249
	NPN			Cable, 4-wire, 2 m, PVC	Cd-231	WSE4SL-3N1137	1058250

[1] Q = light-switching.

Dimensional drawings

Dimensions in mm (inch)

WTB4SL-3, cable

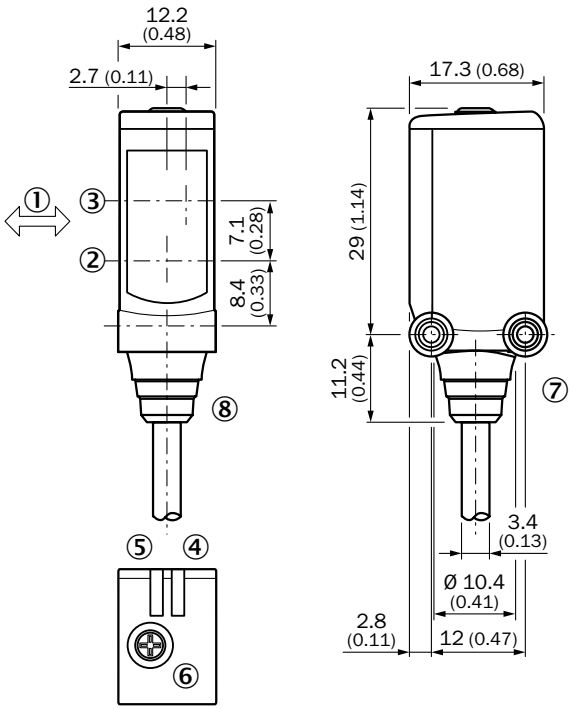

① Standard direction of the material being detected
② Center of optical axis, sender
③ Center of optical axis, receiver
④ Status indicator LED green: power on
⑤ Status indicator LED, yellow: Status of received light beam
⑥ Potentiometer
⑦ Threaded mounting hole M3
⑧ Connection

WTB4SL-3, plug

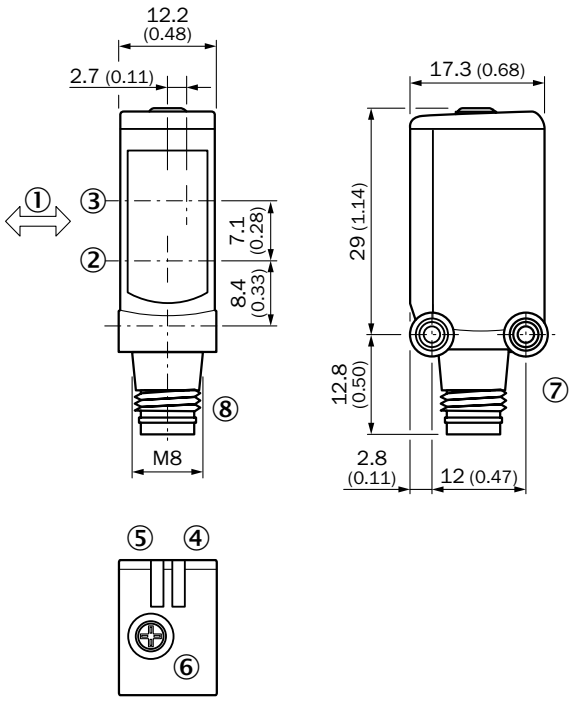

① Standard direction of the material being detected
② Center of optical axis, sender
③ Center of optical axis, receiver
④ Status indicator LED green: power on
⑤ Status indicator LED, yellow: Status of received light beam
⑥ Potentiometer
⑦ Threaded mounting hole M3
⑧ Connection

F

WL4SL-3, WL4SLG-3, WSE4SL-3, plug

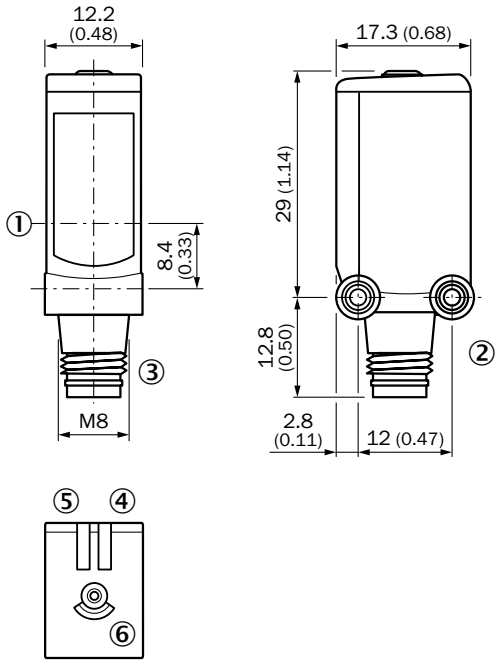

① Center of optical axis
② Threaded mounting hole M3
③ Connection
④ Status indicator LED green: power on
⑤ Status indicator LED, yellow: Status of received light beam
⑥ Single teach-in button

WL4SL-3, WL4SLG-3, WSE4SL-3, cable

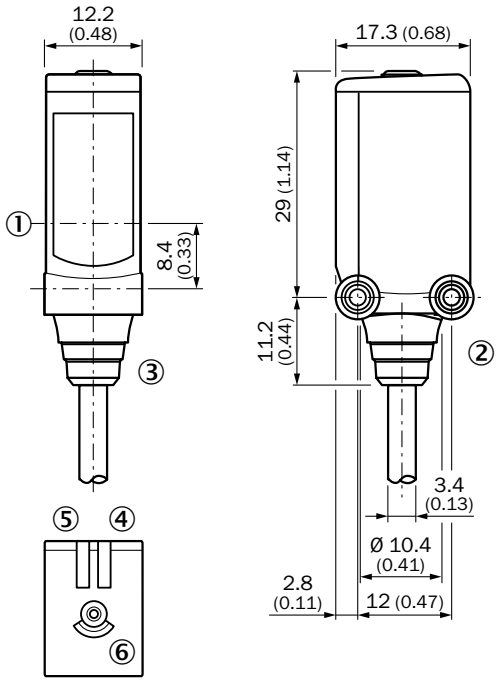

① Center of optical axis
② Threaded mounting hole M3
③ Connection
④ Status indicator LED green: power on
⑤ Status indicator LED, yellow: Status of received light beam
⑥ Single teach-in button

F

Characteristic curves

Black-white shift

WTB4SL-3, laser class 1

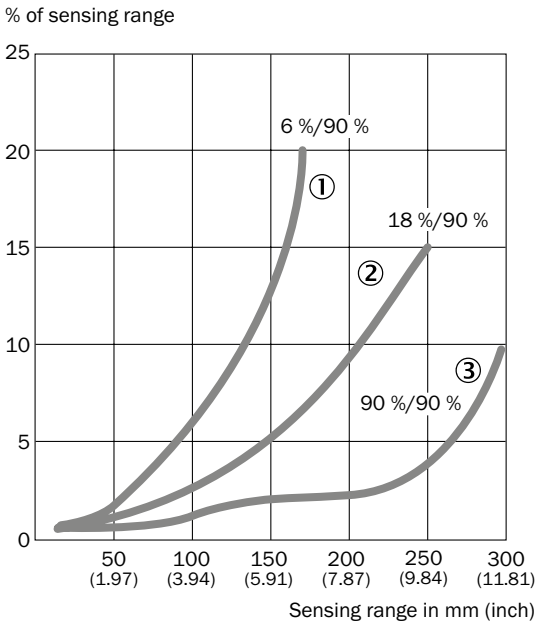

① Sensing range on black, 6 % remission
② Sensing range on gray, 18 % remission
③ Sensing range on white, 90 % remission

Operating reserve

WL4SL-3

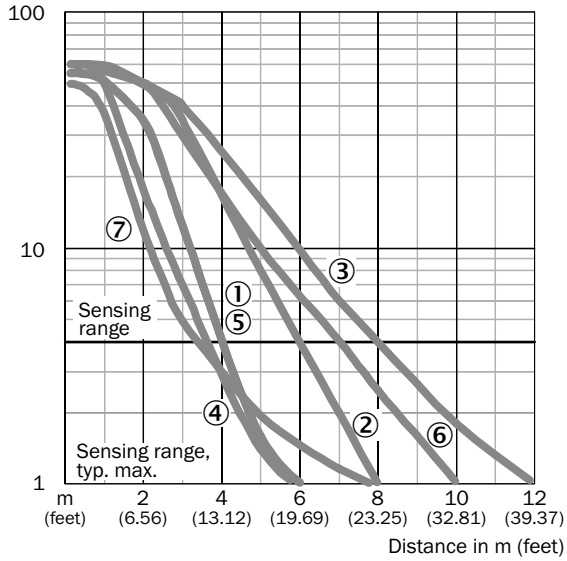

WSE4SL-3

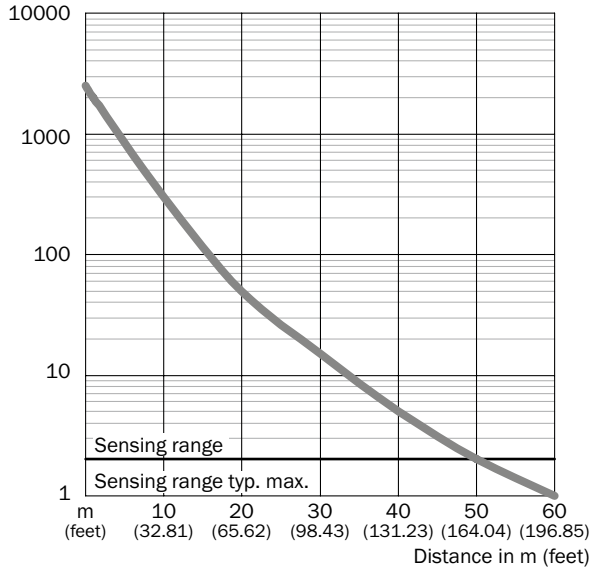

① PL20A
② PL40A
③ PL80A
④ PL10F
⑤ PL20F
⑥ P250F
⑦ REF-AC1000

F

Bar diagrams

WTB4SL-3, laser class 1

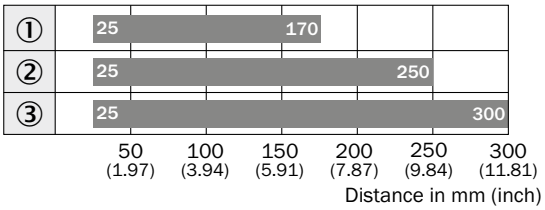

Sensing range typ. max.

① Sensing range on black, 6 % remission
② Sensing range on gray, 18 % remission
③ Sensing range on white, 90 % remission

WL4SL-3

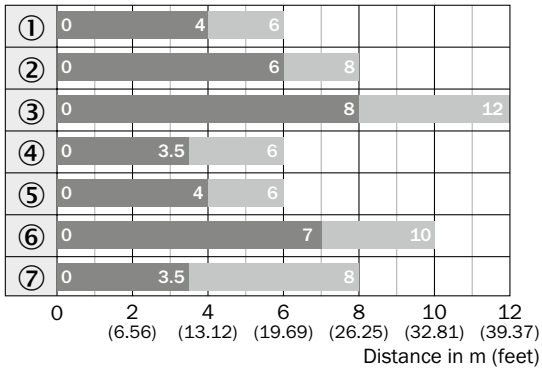

Sensing range Sensing range typ. max.

① PL20A
② PL40A
③ PL80A
④ PL10F
⑤ PL20F
⑥ P250F
⑦ REF-AC1000

WSE4SL-3

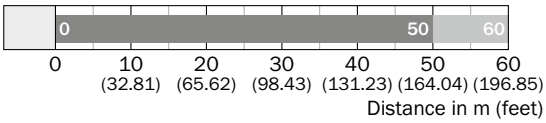

Sensing range Sensing range typ. max.

Light spot diameter

WTB4SL-3, laser class 1

Radius in mm (inch)

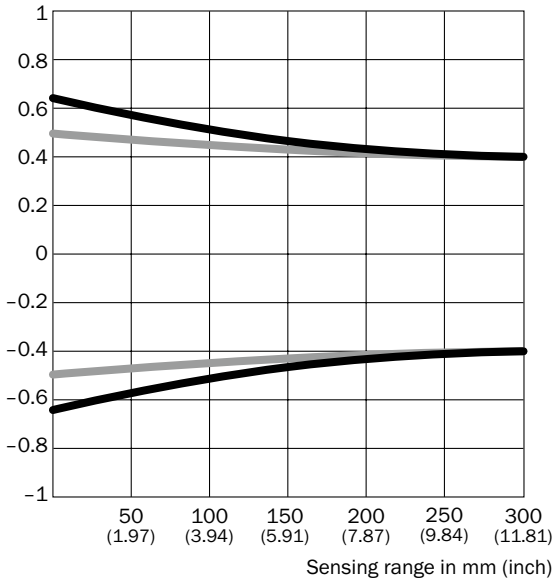

Dimensions in mm (inch)

Sensing range	Vertical	Horizontal
50 mm (1.97)	1.2 (0.05)	1.0 (0.04)
100 mm (3.94)	1.1 (0.04)	1.0 (0.04)
200 mm (7.87)	0.9 (0.04)	0.9 (0.04)
300 mm (11.81)	0.8 (0.03)	0.8 (0.03)

F

WL4SL-3, Overview

Radius in mm (inch)

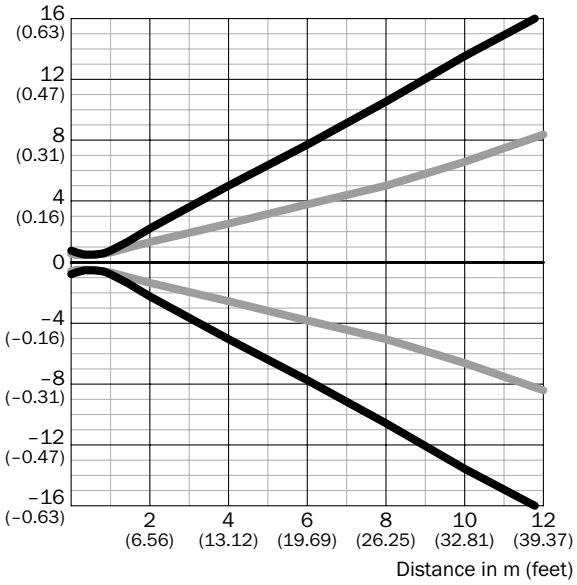

Dimensions in mm (inch)

Sensing range	Vertical	Horizontal
0.5 m (1.64 feet)	< 1.0 (0.04)	< 1.0 (0.04)
1 m (3.28 feet)	1.5 (0.06)	1.2 (0.05)
6 m (19.69 feet)	15.2 (0.60)	7.6 (0.30)
12 m (39.37 feet)	32.4 (1.28)	16.4 (0.65)

WL4SL-3, detailed view, close up

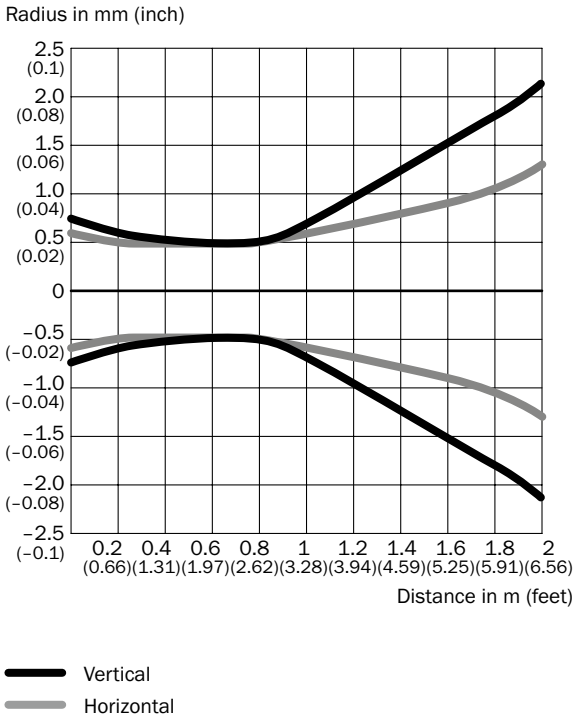

F

WSE4SL-3, overview

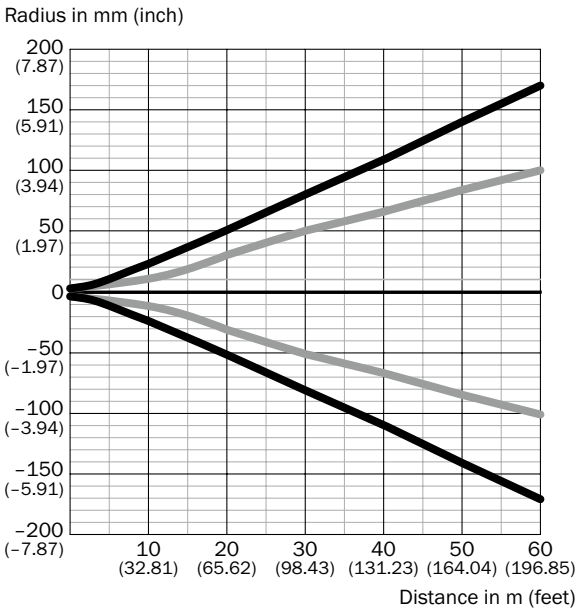

Dimensions in mm (inch)

Sensing range	Vertical	Horizontal
0.5 m (1.64 feet)	< 1.0 (0.04)	< 1.0 (0.04)
1 m (3.28 feet)	1.5 (0.06)	1.2 (0.05)
5 m (16.40 feet)	15 (0.59)	11 (0.43)
10 m (32.81 feet)	45 (1.77)	28 (1.10)
60 m (196.85 feet)	336 (13.23)	200 (7.87)

WSE4SL-3, detailed view, close up

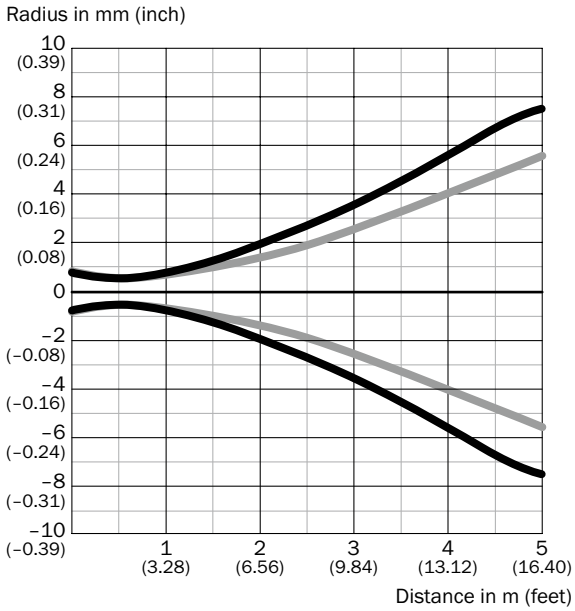

F

Connection diagram

Cd-083

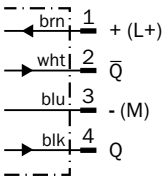

Cd-094

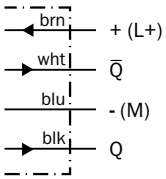

Cd-195

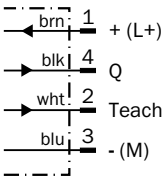

Cd-212

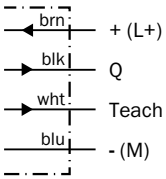

Cd-231

①

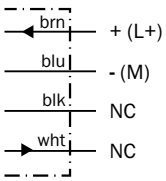

②

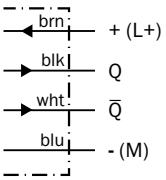

① Sender
② Receiver

Cd-232

①

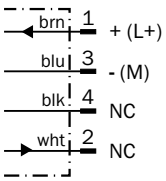

②

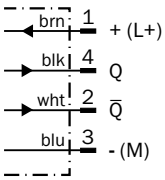

① Sender
② Receiver

Recommended accessories

Plug connectors and cables

Connecting cable (female connector-open)

- **Cable material:** PVC
- **Connector material:** PVC

Figure	Connection type head A	Connection type head B	Connecting cable	Enclosure rating	Model name	Part no.
	Female connector, M8, 4-pin, straight	Cable, open conductor heads	2 m, 4-wire	IP 67	DOL-0804-G02M	6009870
			5 m, 4-wire	IP 67	DOL-0804-G05M	6009872
	Female connector, M8, 4-pin, angled	Cable, open conductor heads	2 m, 4-wire	IP 67	DOL-0804-W02M	6009871
			5 m, 4-wire	IP 67	DOL-0804-W05M	6009873

Female connector (ready to assemble)

Figure	Connection type head A	Connection type head B	Connector material	Enclosure rating	Model name	Part no.
	Female connector, M8, 4-pin, straight	Screw-type terminals	PBT	IP 67	DOS-0804-G	6009974
	Female connector, M8, 4-pin, angled	Pin penetration	PBT	IP 67	DOS-0804-W	6009975

F

Universal bar clamp systems

Figure	Material	Description	Model name	Part no.
	Zinc plated steel (sheet), Diecast zinc (clamp)	Plate N02 for universal clamp bracket	BEF-KHS-N02	2051608
		Plate N08 for universal clamp bracket	BEF-KHS-N08	2051607

Device protection (mechanical)

Protective housing/tubes

Figure	Material	Description	Model name	Part no.
	Stainless steel 1.4571	Safety bracket for floor mounting	BEF-SW-W4S	2051497

Reflectors

Angular

Figure	Material	Description	Model name	Part no.
	PMMA/ABS	Rectangular, screw connection, 80 mm x 80 mm	PL80A	1003865

Fine triple reflectors

Figure	Material	Description	Model name	Part no.
	PMMA/ABS	Fine triple, screw connection, suitable for laser sensors, 47 mm x 47 mm	P250F	5308843
		Fine triple, self-adhesive, suitable for laser sensors, Ø 23 mm	P25F-1	5319385
		Reflector with microprismatic reflex tape REF-AC1000, suitable for laser sensors, see alignment note, 23 mm x 23 mm	P41F	5315128
		Fine triple, screw connection, suitable for laser sensors, 18 mm x 18 mm	PL10F	5311210
		Fine triple, screw connection, suitable for laser sensors, 38 mm x 16 mm	PL20F	5308844
		Fine triple, screw connection, suitable for laser sensors, 56 mm x 28 mm	PL30F	5326523
		Fine triple, screw connection, suitable for laser sensors, 76 mm x 45 mm	PL81-1F	5325060

F

Reflective tape

Figure	Description	Model name	Part no.
	Suitable for laser sensors, self-adhesive, cut, see alignment note, 56.3 mm x 56.3 mm	REF-AC1000-56	4063030

→ **For additional accessories, please see page L-861**

F

Detect all objects with one device – Change mode via teach button

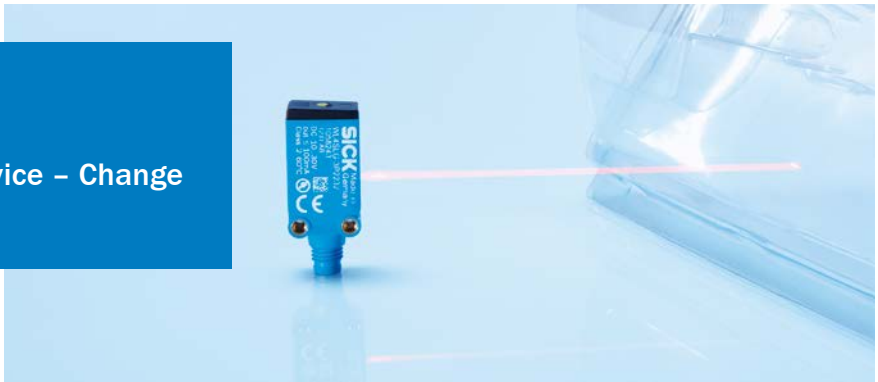

F

Product description

The WL4SLG-3 detects all types of objects, including transparent vials, PET bottles, metallic needles, and wires, thus reducing the variety of sensors and their storage costs. The precise, highly visible laser light spot ensures a high level of detection quality and facilitates sensor alignment. Autocollimation technology ensures that the sensor reliably detects objects at close range and through small drilled holes. The sensor uses continuous threshold adaptation (AutoAdapt) to adjust automatically to changing light conditions, helping ensure maintenance-free system operation. The photoelectric sensors also provide an IO-Link interface to allow performing initial system performance diagnostics. Furthermore, IO-Link permits the integration of additional functions such as meters directly into the sensor. There is no need for complex control programming.

At a glance

- Precise laser light spot, laser class 1
- Teach-in button can be switched between detection of transparent and smallest non-transparent objects
- Continuous threshold adaptation (AutoAdapt) provides automatic adjustment to changes in light conditions
- Sensing ranges up to 4.5 m
- Autocollimation optics prevent blind spots
- Choice of adjustment via teach-in button, potentiometer, cable, or IO-Link

Your benefits

- One device for detecting both transparent objects and the smallest non-transparent objects at sensing ranges up 4.5 m, thus reducing the variety of sensors and saving on storage costs
- Highly visible, even laser light spot with a sharp contour to facilitate alignment
- The highest degree of machine design flexibility. Autocollimation permits detection even through small drilled holes
- High-quality sensor manufacturing and testing reduce maintenance costs
- Established and proven housing design for easy installation
- IO-Link facilitates initial system performance diagnostics and uses additional sensor functions to reduce complex control programming

→ **www.mysick.com/en/W4SLG-3**

For more information, just enter the link or scan the QR code and get direct access to technical data, CAD design models, operating instructions, software, application examples and much more.

Additional information

Detailed technical data

Features

Sensor principle	Photoelectric retro-reflective sensor
Detection principle	Autocollimation
Dimensions (W x H x D)	12.2 mm x 41.8 mm x 17.3 mm
Housing design (light emission)	Rectangular
Mounting hole	M3
Sensing range max. [1]	0 m ... 4.5 m
Sensing range [1]	0 m ... 2 m
Type of light	Visible red light
Light source [2]	Laser
Light spot size (distance)	Ø 1 mm (500 mm)
Wave length	650 nm
Laser class [3]	1
Adjustment	Single teach-in button / Cable, Single teach-in button [4] (depending on type)
Special feature	Detection of transparent objects

[1] REF-AC1000.
[2] Average service life 50,000 h at T_A = +25 °C.
[3] EN60825-1:2008-05 & IEC 60825-1:2007-03 / CDRH 21 CFR 1040.10 & 1040.11
[4] Adjustment via cable (ET): white cable or PIN2 according to the desired sensitivity > 2 ... < 8 s or put > 8 s on L+ (PNP) or on M (NPN)

F

Mechanics/electronics

Supply voltage [1]	10 V DC ... 30 V DC
Ripple [2]	< 5 V_{pp}
Power consumption [3]	≤ 30 mA
Output type	PNP / NPN (depending on type)
Output function	Complementary
Switching mode	Light/dark-switching [4] / Dark-switching [5] (depending on type)
Output current $I_{max.}$	≤ 100 mA
Response time [6]	≤ 0.5 ms
Switching frequency [7]	1,000 Hz
Connection type	Male connector, M8 Cable, 2 m [8] Cable with connector, M8, 120 mm [8] (depending on type)
Circuit protection	A [9], B [10], C [11]
Protection class	III
Weight	100 g
Polarisation filter	✔
Housing material	Bayblend
Optics material	PMMA

Enclosure rating	IP 66, IP 67
Ambient operating temperature	–10 °C ... +50 °C
Ambient operating temperature extended [12] [13]	–30 °C ... +55 °C
Ambient storage temperature	–30 °C ... +70 °C

[1] Limit values, operation in short-circuit protected network max. 8 A.
[2] May not exceed or fall short of V_S tolerances.
[3] Without load.
[4] Q = light-switching.
[5] Q = dark-switching.
[6] Signal transit time with resistive load.
[7] With light/dark ratio 1:1.
[8] Do not bend below 0 °C.
[9] A = V_S connections reverse-polarity protected.
[10] B = inputs and output reverse-polarity protected.
[11] C = interference suppression.
[12] As of T_a = 50 °C, a max. supply voltage $V_{max.}$ = 24 V and a max. load current $I_{max.}$ = 50 mA is permitted.
[13] Using the sensor below T_a = –10 °C is possible, if the sensor is turned on at T_a > –10 °C, then the environment cools down and the sensor is not disconnected from the supply voltage during the whole time. It is not allowed to turn on the sensor below T_a = –10 °C.

Ordering information

Other models available at www.mysick.com/en/W4SLG-3

WL4SLG-3

- **Sensor principle:** photoelectric retro-reflective sensor

F

Sensing range max. [1]	Output type	Switching mode	Adjustment	Connection	Connection diagram	Model name	Part no.
0 m ... 4.5 m	PNP	Light/dark-switching [2]	Single teach-in button	Connector M8, 4-pin	Cd-083	WL4SLG-3P2232	1058243
				Cable with connector M8, 4-pin, 120 mm, PVC	Cd-083	WL4SLG-3P3232	1058245
		Dark-switching [3]	Cable, Single teach-in button [4]	Connector M8, 4-pin	Cd-195	WL4SLG-3F2234	1058244
				Cable with connector M8, 4-pin, 120 mm, PVC	Cd-195	WL4SLG-3F3234	1058246
	NPN	Light/dark-switching [2]	Single teach-in button	Cable, 4-wire, 2 m, PVC	Cd-094	WL4SLG-3N1132	1058247
		Dark-switching [3]	Cable, Single teach-in button [4]	Cable, 4-wire, 2 m, PVC	Cd-212	WL4SLG-3E1134	1058248

[1] REF-AC1000.
[2] Q = light-switching.
[3] Q = dark-switching.
[4] Adjustment via cable (ET): white cable or PIN2 according to the desired sensitivity > 2 ... < 8 s or put > 8 s on L+ (PNP) or on M (NPN)

Dimensional drawings

Dimensions in mm (inch)

WL4SLG-3, plug

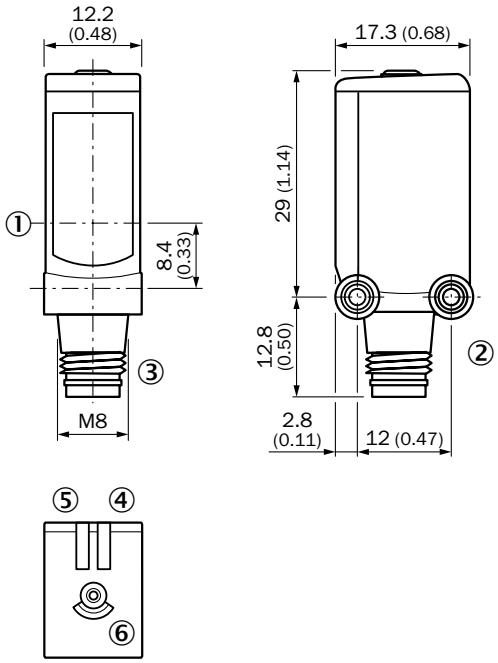

① Center of optical axis
② Threaded mounting hole M3
③ Connection
④ Status indicator LED green: power on
⑤ Status indicator LED, yellow: Status of received light beam
⑥ Single teach-in button

WL4SLG-3, cable

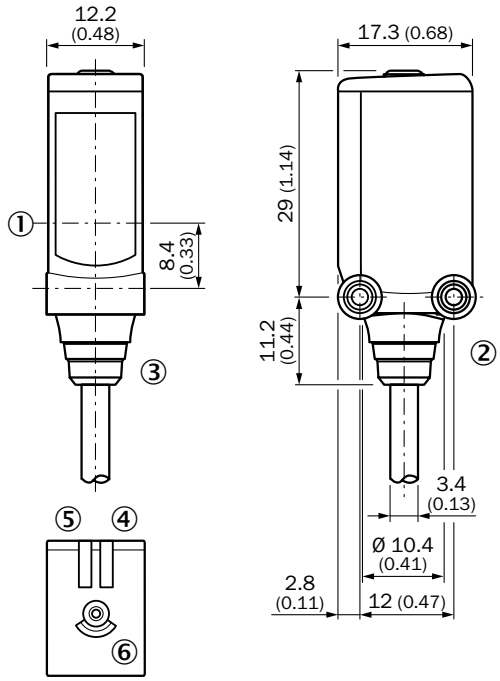

① Center of optical axis
② Threaded mounting hole M3
③ Connection
④ Status indicator LED green: power on
⑤ Status indicator LED, yellow: Status of received light beam
⑥ Single teach-in button

F

Characteristic curves

WL4SLG-3

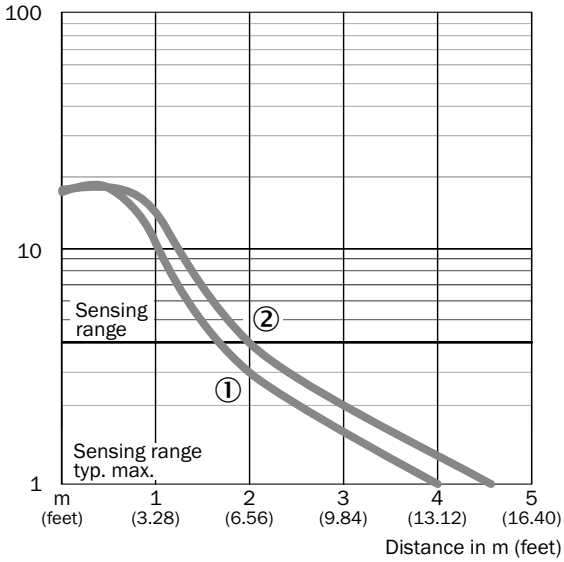

① PLV14-A / PLH25-M12 / PLH25-D12
② P41F / REF-AC1000

Light spot diameter

WL4SLG-3, Overview

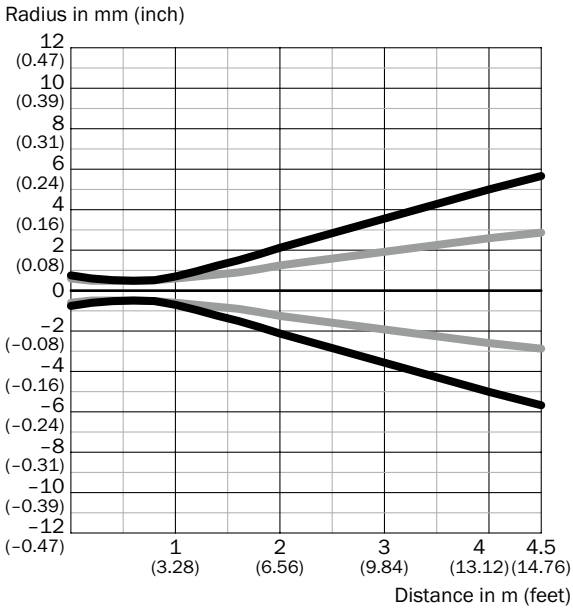

Dimensions in mm (inch)

Sensing range	Vertical	Horizontal
0.5 m (1.64 feet)	< 1.0 (0.04)	< 1.0 (0.04)
1 m (3.28 feet)	1.5 (0.06)	1.2 (0.05)
2 m (6.56 feet)	4.3 (0.17)	2.6 (0.10)
4.5 m (14.76 feet)	11.3 (0.44)	5.6 (0.22)

Vertical
Horizontal

WL4SLG-3, detail, close up

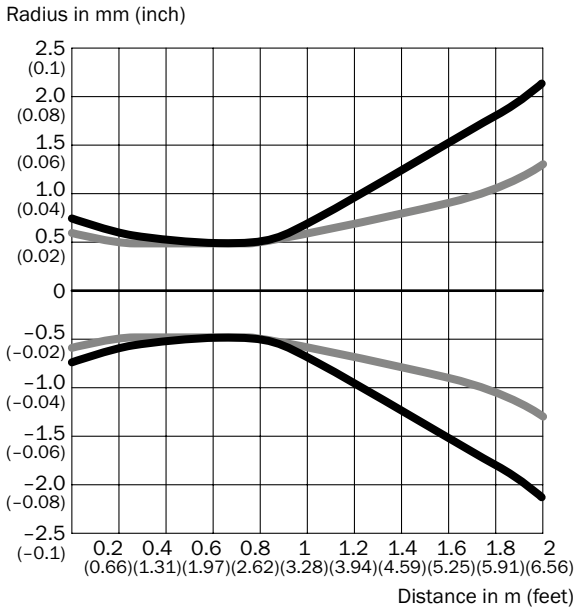

Vertical
Horizontal

F

Connection diagram

Cd-083

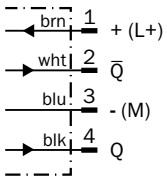

Cd-094

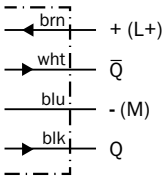

Cd-195

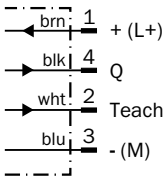

Cd-212

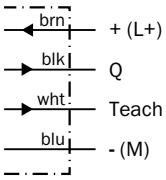

Recommended accessories

Plug connectors and cables

Connecting cable (female connector-open), PVC

- **Cable material:** PVC
- **Connector material:** PVC

Figure	Connection type head A	Connection type head B	Connecting cable	Enclosure rating	Model name	Part no.
	Female connector, M8, 4-pin, straight	Cable, open conductor heads	2 m, 4-wire	IP 67	DOL-0804-G02M	6009870
			5 m, 4-wire	IP 67	DOL-0804-G05M	6009872
	Female connector, M8, 4-pin, angled	Cable, open conductor heads	2 m, 4-wire	IP 67	DOL-0804-W02M	6009871
			5 m, 4-wire	IP 67	DOL-0804-W05M	6009873

Female connector (ready to assemble)M8, 4-pin

Figure	Connection type head A	Connection type head B	Connector material	Enclosure rating	Model name	Part no.
	Female connector, M8, 4-pin, straight	Screw-type terminals	PBT	IP 67	DOS-0804-G	6009974
	Female connector, M8, 4-pin, angled	Pin penetration	PBT	IP 67	DOS-0804-W	6009975

F

Universal bar clamp systems

Figure	Material	Description	Model name	Part no.
	Zinc plated steel (sheet), Diecast zinc (clamp)	Plate N02 for universal clamp bracket	BEF-KHS-N02	2051608
	Stainless steel 1.4571 (sheet), Stainless steel 1.4408 (clamp)	Plate N02N for universal clamp bracket	BEF-KHS-N02N	2051618
	Zinc plated steel (sheet), Diecast zinc (clamp)	Plate N08 for universal clamp bracket	BEF-KHS-N08	2051607
	Stainless steel 1.4571 (sheet), Stainless steel 1.4408 (clamp)	Plate N08N for universal clamp bracket	BEF-KHS-N08N	2051616

Device protection (mechanical)

Protective housing/tubes

Figure	Material	Description	Model name	Part no.
	Stainless steel 1.4571	Safety bracket for floor mounting	BEF-SW-W4S	2051497

Reflectors

Angular

Figure	Material	Description	Model name	Part no.
	PMMA/ABS	Rectangular, screw connection, 80 mm x 80 mm	PL80A	1003865

Fine triple reflectors

Figure	Material	Description	Model name	Part no.
	PMMA/ABS	Fine triple, screw connection, suitable for laser sensors, 47 mm x 47 mm	P250F	5308843
		Fine triple, screw connection, suitable for laser sensors, 18 mm x 18 mm	PL10F	5311210
	Plastic	Fine triple, chemically resistant, screw connection, 18 mm x 18 mm	PL10F CHEM	5321636
	PMMA/ABS	Fine triple, screw connection, suitable for laser sensors, 38 mm x 16 mm	PL20F	5308844
	Plastic	Fine triple, chemically resistant, screw connection, suitable for laser sensors, 16 mm x 38 mm	PL20F-CHEM	5326089
	PMMA/ABS	Fine triple, screw connection, suitable for laser sensors, 56 mm x 28 mm	PL30F	5326523
		Fine triple, screw connection, suitable for laser sensors, 76 mm x 45 mm	PL81-1F	5325060

F

Reflective tape

Figure	Description	Model name	Part no.
	Suitable for laser sensors, self-adhesive, cut, see alignment note, 56.3 mm x 56.3 mm	REF-AC1000-56	4063030

Special reflectors

Figure	Material	Description	Model name	Part no.
	Stainless steel V4A (1.4404, 316L)	Stainless steel reflector, hygienic design, chemically resistant, Enclosure rating IP 69K, D12-adapter shaft, 25 mm x 25 mm	PLH25-D12	2063404
		Stainless steel reflector, hygienic design, chemically resistant, Enclosure rating IP 69K, M12-adapter thread, 25 mm x 25 mm	PLH25-M12	2063403
		Stainless steel reflector, wash-down design, chemically resistant, Enclosure rating IP 69K, screw connection, 14 mm x 14 mm	PLV14-A	2063405

→ **For additional accessories, please see page L-861**

F

Highest reliability, maximum resistance and endless possibilities

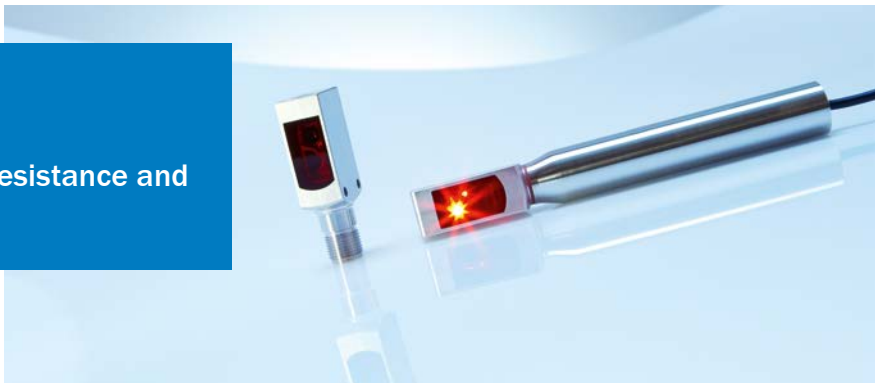

F

Product description

The W4S-3 INOX photoelectric sensor series in WashDown-Design combines a rugged and water tight IP 69K stainless steel housing with “best-in-class” optical functionality. This product family features a compact design that saves space and ensures high plant availability due to water tight teach-in pushbutton with a metal membrane and pin casting M12-connector. The stainless steel housing withstands stringent cleaning procedures in food and beverage, pharmaceutical, solar and semiconductor industries.

At a glance

- WashDown rated for fluid tightness (IP 66, IP 67, IP 68 and IP 69K) and Ecolab certified
- Tough stainless steel housing (316L/1.4404)
- Resistant to a variety of common cleaning and disinfection agents
- Highly visible laser-like light spot due to PinPoint LED
- Teach-in via stainless steel pushbutton with a metal membrane

Your benefits

- Long service life in harsh conditions ensures less downtime and fewer replacement costs
- Quick and easy alignment due to highly visible PinPoint emitter LED
- Easy adjustment via a stainless steel metal membrane teach-in pushbutton

Additional information

→ **www.mysick.com/en/W4S-3_Inox**

For more information, just enter the link or scan the QR code and get direct access to technical data, CAD design models, operating instructions, software, application examples and much more.

Detailed technical data

Features

	WTB4S-3V	WTF4S-3V	WL4S-3V	WSE4S-3V
Sensor principle	Photoelectric proximity sensor		Photoelectric retro-reflective sensor	Through-beam photo-electric sensor
Detection principle	Background suppression	Foreground suppression	Autocollimation	–
Dimensions (W x H x D)	15.25 mm x 49.2 mm x 22.2 mm (depending on type)			15.25 mm x 48.6 mm x 22.2 mm(depending on type)
Housing design	Washdown			
Housing design (light emission)	Rectangular			
Sensing range max.	4 mm ... 500 mm [1] (depending on type)	20 mm ... 200 mm [1]	0 m ... 5 m [2] (depending on type)	0 m ... 5 m
Sensing range	10 mm ... 350 mm [1] (depending on type)	–	0 m ... 3 m [2] (depending on type)	0 m ... 4.5 m
Type of light	Visible red light			
Light source [3]	PinPoint LED			
Wave length	650 nm			
Adjustment	Cable [4] / Single teach-in button (depending on type)		Single teach-in button	–
Alarm output	–		✔ (depending on type)	–
Special feature	–	Detection of transparent objects	–	

[1] Object with 90 % reflectance (referred to standard white, DIN 5033)
[2] PL80A.
[3] Average service life of 100,000 h at T_A = +25 °C.
[4] External teach-in: pulse > 2 s with voltage Uv with PNP and M with NPN.

Mechanics/electronics

	WTB4S-3V	WTF4S-3V	WL4S-3V	WSE4S-3V
Supply voltage [1]	10 V DC ... 30 V DC			
Ripple [2]	< 5 V_{pp}			
Power consumption [3]	≤ 30 mA			
Power consumption, sender	–			≤ 20 mA [3]
Power consumption, receiver	–			≤ 20 mA [3]
Output type	PNP / NPN (depending on type)	PNP	PNP / NPN (depending on type)	
Output function	Complementary			–
Switching mode	Light switching / Dark-switching / Light/dark-switching (depending on type)			
Output current $I_{max.}$	≤ 100 mA			
Response time [4]	< 0.5 ms			
Switching frequency [5]	1,000 Hz			
Connection type	Cable, 2 m [7] / Male connector, M8 [6] / Male connector, M12 [7] [8] (depending on type)			
Circuit protection	A [9], B [10], C [11]			
Protection class	III			
Weight				
Cable, 4-wire	80 g	–	80 g	
Connector M8	40 g			
Connector M8, 4-pin	45 g	–	60 g	

F

	WTB4S-3V	WTF4S-3V	WL4S-3V	WSE4S-3V
Polarisation filter	–		✔	–
Housing material	Stainless steel 316L			
Enclosure rating	IP 66, IP 67, IP 68, IP 69K [12]			
Test input sender off	–			"Test" to 0 V
Ambient operating temperature	–30 °C ... +70 °C [13] –30 °C ... +60 °C			–30 °C ... +70 °C [13]
Ambient storage temperature	–30 °C ... +75 °C			

[1] Limit values, reverse-polarity protected, operation in short-circuit protected network: max. 8 A.
[2] May not exceed or fall short of V_S tolerances.
[3] Without load.
[4] Signal transit time with resistive load.
[5] With light/dark ratio 1:1.
[6] Tightening torque, max.: 0.6 Nm.
[7] Do not bend below 0 °C.
[8] Tightening torque, max.: 0.7 Nm.
[9] A = V_S connections reverse-polarity protected.
[10] B = inputs and output reverse-polarity protected.
[11] C = interference suppression.
[12] Only in case of correctly mounted IP 69K connecting cable.
[13] At UV ≤ 24 V and IA < 30 mA.

Ordering information

Other models available at www.mysick.com/en/W4S-3_Inox

F

WTB4S-3V

- **Sensor principle:** photoelectric proximity sensor
- **Detection principle:** background suppression

Sensing range max. [1]	Light spot size (distance)	Output type	Switching mode	Adjustment	Connection	Connection diagram	Model name	Part no.
4 mm ... 120 mm	Ø 2.5 mm (50 mm)	PNP	Light switching	Single teach-in button	Connector M8, 3-pin	Cd-045	WTB4S-3P2132V	1046397
					Connector M12, 4-pin	Cd-083	WTB4S-3P2432V	1054672
				Cable [2]	Connector M8, 4-pin	Cd-092	WTB4S-3P2235V	1045093
			Dark-switching	Single teach-in button	Connector M8, 3-pin	Cd-045	WTB4S-3F2132V	1046404
			Light/dark-switching	Single teach-in button	Cable, 4-wire, 2 m, PVC	Cd-094	WTB4S-3P1132V	1046402
		NPN	Light switching	Single teach-in button	Connector M8, 3-pin	Cd-045	WTB4S-3N2132V	1046405
					Cable, 3-wire, 2 m, PVC	Cd-044	WTB4S-3N1332V	1046406
			Light/dark-switching	Single teach-in button	Connector M12, 4-pin	Cd-083	WTB4S-3N2432V	1054674
4 mm ... 280 mm	Ø 2.5 mm (100 mm)	PNP	Light switching	Cable, Single teach-in button [2]	Connector M8, 4-pin	Cd-092	WTB4S-3P2204VS02	1047652
					Connector M8, 4-pin	Cd-092	WTB4S-3F2234VS08	1053075
				Cable [2]	Connector M8, 4-pin	Cd-092	WTB4S-3P2205VS01	1046214
				Single teach-in button [2]	Connector M8, 4-pin	Cd-092	WTB4S-3P2234VS05	1050833
			Light/dark-switching	Cable Single teach-in button	Connector M12, 4-pin	Cd-098	WTB4S-3P2402VS09	1054706

[1] Object with 90 % reflectance (referred to standard white, DIN 5033)
[2] External teach-in: pulse > 2 s with voltage Uv with PNP and M with NPN.

Sensing range max. [1]	Light spot size (distance)	Output type	Switching mode	Adjustment	Connection	Con-nection diagram	Model name	Part no.
4 mm ... 500 mm	Ø 6.5 mm (150 mm)	PNP	Light switching	Single teach-in button	Connector M8, 3-pin	Cd-045	WTB4S-3P2162V	1046384
			Dark-switching	Single teach-in button	Connector M8, 3-pin	Cd-045	WTB4S-3F2162V	1046389
			Light/dark-switching	Single teach-in button	Connector M8, 4-pin	Cd-083	WTB4S-3P2262V	1046383
					Connector M12, 4-pin	Cd-083	WTB4S-3P2462V	1054675
		NPN	Light/dark-switching	Single teach-in button	Cable, 4-wire, 2 m, PVC	Cd-094	WTB4S-3N1162V	1046391
					Connector M12, 4-pin	Cd-083	WTB4S-3N2462V	1054703

[1] Object with 90 % reflectance (referred to standard white, DIN 5033)

[2] External teach-in: pulse > 2 s with voltage Uv with PNP and M with NPN.

WTF4S-3V, Detection of transparent objects

- **Sensor principle:** photoelectric proximity sensor
- **Detection principle:** foreground suppression

Sensing range max. [1]	Light spot size (dis-tance)	Output type	Switching mode	Adjustment	Connection	Con-nection diagram	Model name	Part no.
20 mm ... 200 mm	Ø 6.5 mm (150 mm)	PNP	Light switching	Cable [2]	Connector M8, 4-pin	Cd-083	WTF4S-3P2265V	1045094
			Light/dark-switching	Single teach-in button	Connector M8, 4-pin	Cd-083	WTF4S-3P2262V	1046410

[1] Object with 90 % reflectance (referred to standard white, DIN 5033)

[2] External teach-in: pulse > 2 s with voltage Uv with PNP and M with NPN.

F

WL4S-3V

- **Sensor principle:** photoelectric retro-reflective sensor
- **Detection principle:** autocollimation

Sensing range max. [1]	Light spot size (distance)	Output type	Switching mode	Adjustment	Connection	Con-nection diagram	Model name	Part no.
0 m ... 4 m	Ø 45 mm (1.5 m)	PNP	Light switching	–	Cable, 3-wire, 2 m, PVC	Cd-044	WL4S-3P1330V	1048044
			Dark-switching	–	Connector M8, 3-pin	Cd-045	WL4S-3F2130V	1045096
			Light/dark-switching	–	Connector M8, 4-pin	Cd-083	WL4S-3P2230V	1045095
		NPN	Dark-switching	–	Cable, 3-wire, 2 m, PVC	Cd-044	WL4S-3E1330V	1046420
					Connector M8, 3-pin	Cd-045	WL4S-3E2130V	1045097
0 m ... 5 m	Ø 45 mm (1.5 m)	PNP	Light switching	Single teach-in button	Cable, 3-wire, 2 m, PVC	Cd-044	WL4S-3P1332V	1046427
					Connector M8, 3-pin	Cd-045	WL4S-3P2132V	1046424
			Dark-switching	Single teach-in button	Cable, 3-wire, 2 m, PVC	Cd-044	WL4S-3F1332V	1046430
					Connector M8, 3-pin	Cd-045	WL4S-3F2132V	1046428
			Light/dark-switching	Single teach-in button	Connector M8, 4-pin	Cd-083	WL4S-3P2232V	1046421
					Connector M12, 4-pin, PVC	Cd-083	WL4S-3P2432V	1054715
		NPN	Light switching	Single teach-in button	Connector M8, 3-pin	Cd-045	WL4S-3N2132V	1046432
			Dark-switching	Single teach-in button	Connector M8, 3-pin	Cd-045	WL4S-3E2132V	1046435
			Light/dark-switching	Single teach-in button	Connector M12, 4-pin, PVC	Cd-083	WL4S-3N2432V	1054722

[1] PL80A.

WL4S-3V, Alarm output

- **Sensor principle:** photoelectric retro-reflective sensor
- **Detection principle:** autocollimation

Sensing range max. [1]	Light spot size (distance)	Output type	Switching mode	Adjustment	Connection	Connection diagram	Model name	Part no.
0 m ... 5 m	Ø 45 mm (1.5 m)	PNP	Dark-switching	Single teach-in button	Connector M8, 4-pin	Cd-107	WL4S-3V2232V	1046422

[1] PL80A.

WSE4S-3V

- **Sensor principle:** through-beam photoelectric sensor

Sensing range max.	Light spot size (distance)	Output type	Switching mode	Connection	Connection diagram	Model name	Part no.
0 m ... 5 m	Ø 40 mm (2 m)	PNP	Light switching	Cable, 3-wire, 2 m, PVC	Cd-061	WSE4S-3P1330V	1052887
				Connector M8, 3-pin	Cd-069	WSE4S-3P2130V	1052893
			Dark-switching	Cable, 3-wire, 2 m, PVC	Cd-061	WSE4S-3F1330V	1052880
				Connector M8, 3-pin	Cd-069	WSE4S-3F2130V	1052891
		NPN	Dark-switching	Cable, 3-wire, 2 m, PVC	Cd-061	WSE4S-3E1330V	1052869
				Connector M8, 3-pin	Cd-069	WSE4S-3E2130V	1052877
			Light switching	Cable, 3-wire, 2 m, PVC	Cd-061	WSE4S-3N1330V	1052874
				Connector M8, 3-pin	Cd-069	WSE4S-3N2130V	1052878

F

Dimensional drawings

Dimensions in mm (inch)

WTB4S-3V, WTF4S-3V, Single teach-in button

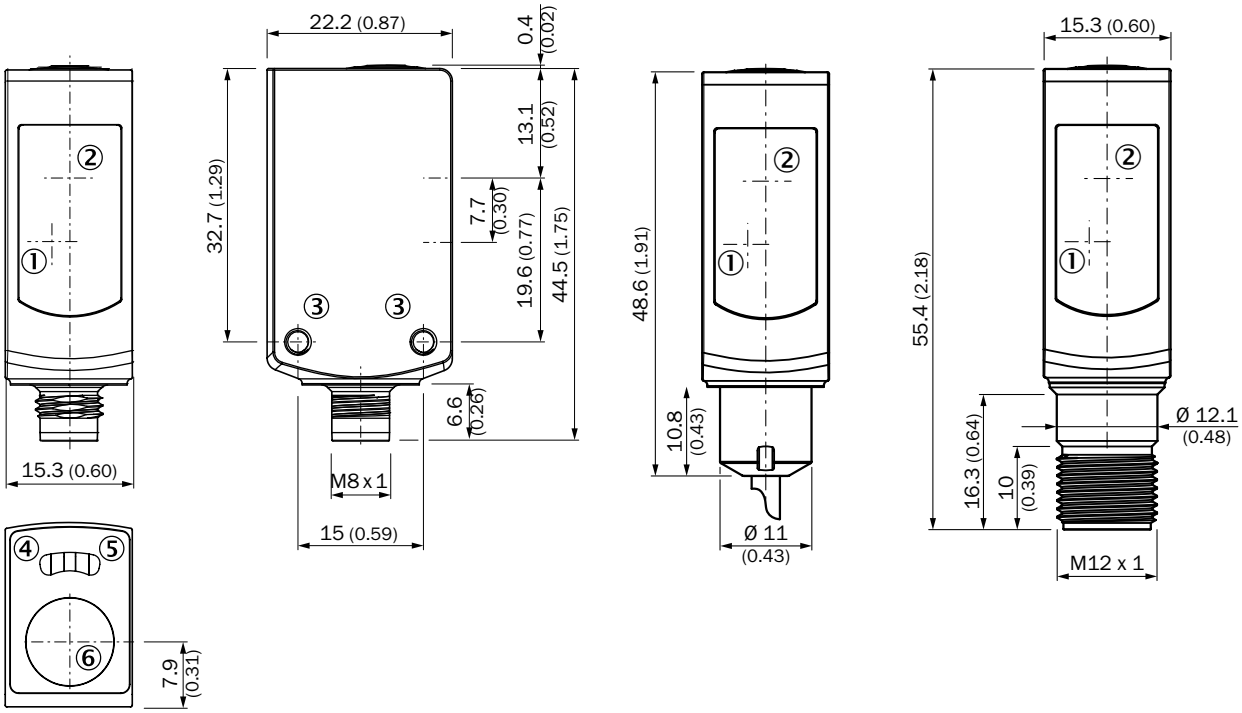

① Center of optical axis, receiver
② Center of optical axis, sender
③ Threaded mounting hole M3
④ Status indicator LED, yellow: Status of received light beam
⑤ Status indicator LED green: power on
⑥ Teach-in button

WTB4S-3V, WTF4S-3V, without single teach-in button

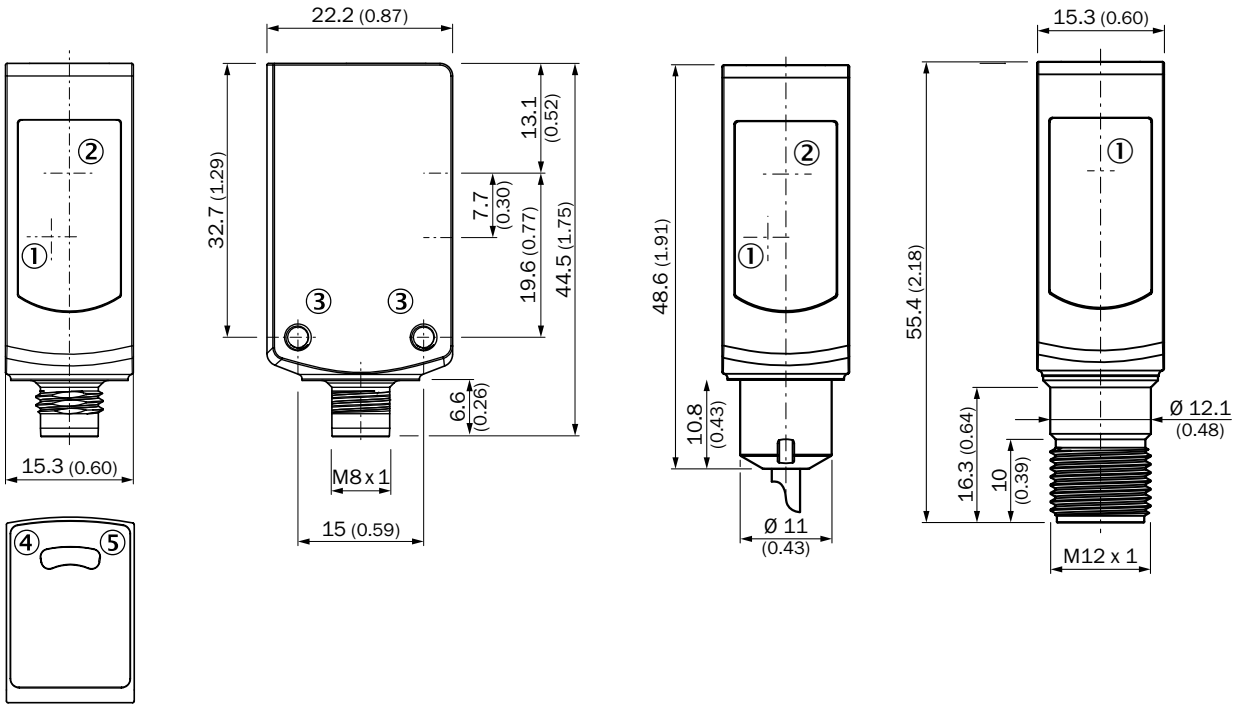

① Center of receiver's optical axis
② Center of optical axis, sender
③ Threaded mounting hole M3
④ Status indicator LED, yellow: Status of received light beam
⑤ Status indicator LED green: power on

F

WL4S-3V, WSE4S-2V, without single teach-in button

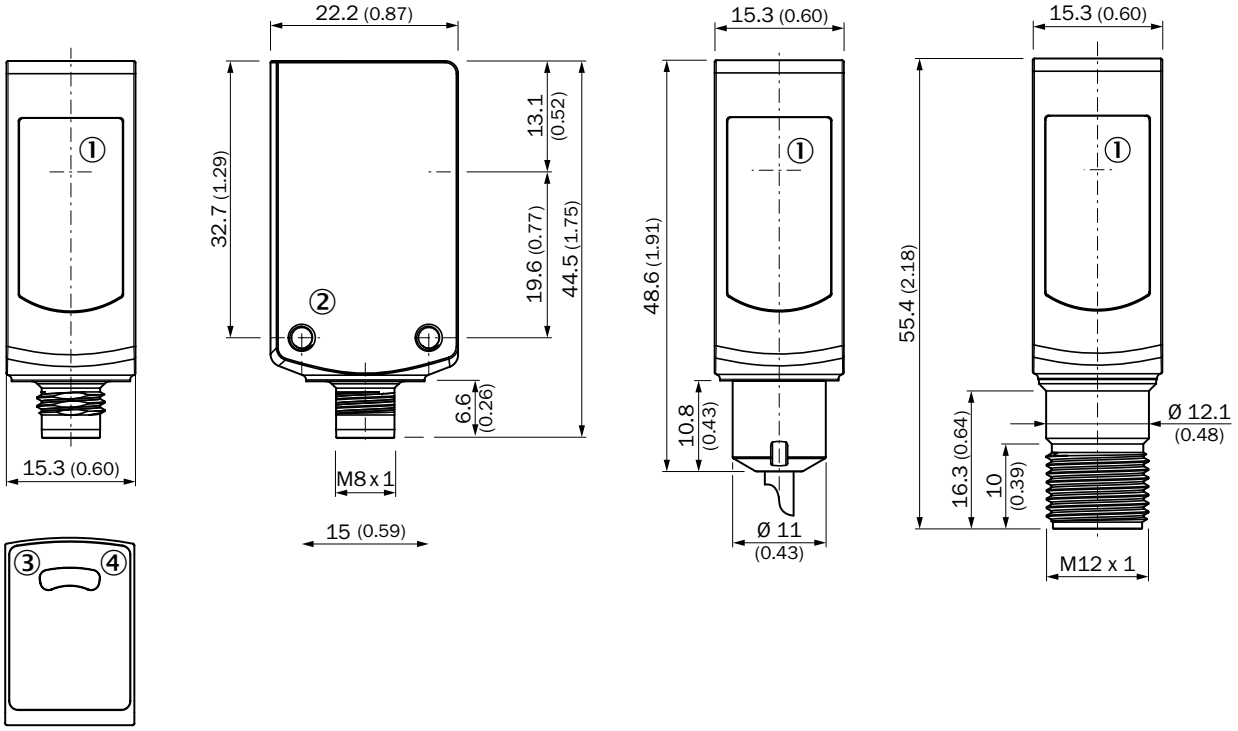

F

① Center of optical axis
② Threaded mounting hole M3
③ Status indicator LED, yellow: Status of received light beam
④ Status indicator LED green: power on

WL4S-3V, with single teach-in button

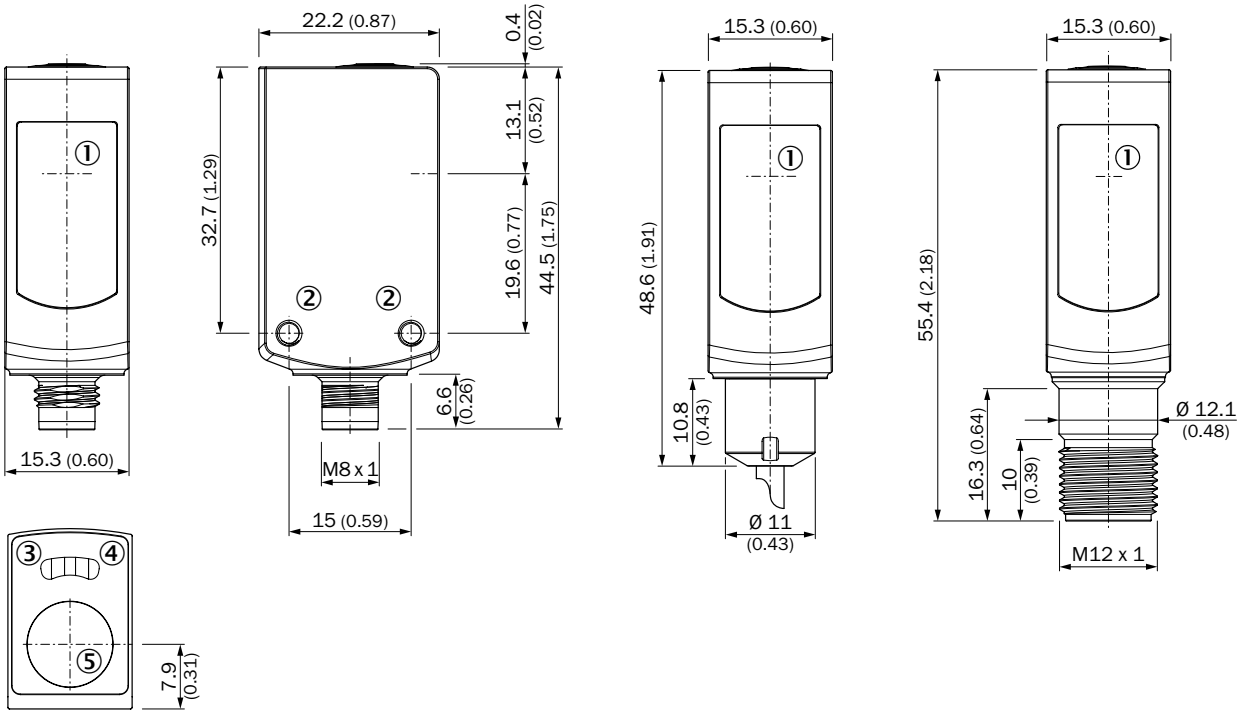

① Center of optical axis
② Threaded mounting hole M3
③ Status indicator LED, yellow: Status of received light beam
④ Status indicator LED green: power on
⑤ Teach-in button

Characteristic curves

Black-white shift

WTB4S-3, 120 mm

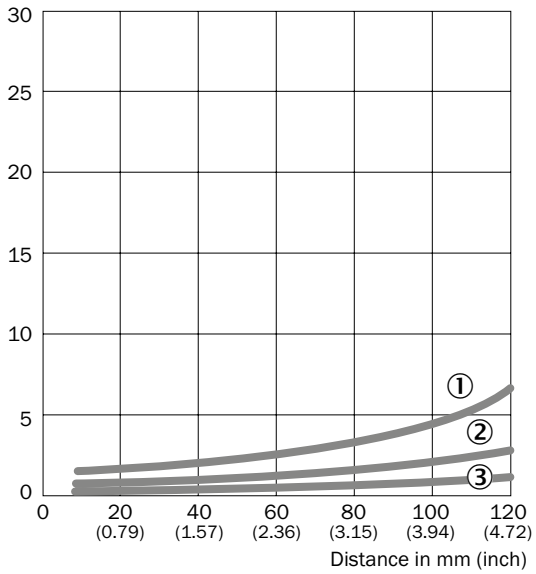

① Sensing range on black, 6 % remission
② Sensing range on gray, 18 % remission
③ Sensing range on white, 90 % remission

WTB4S-3, 280 mm

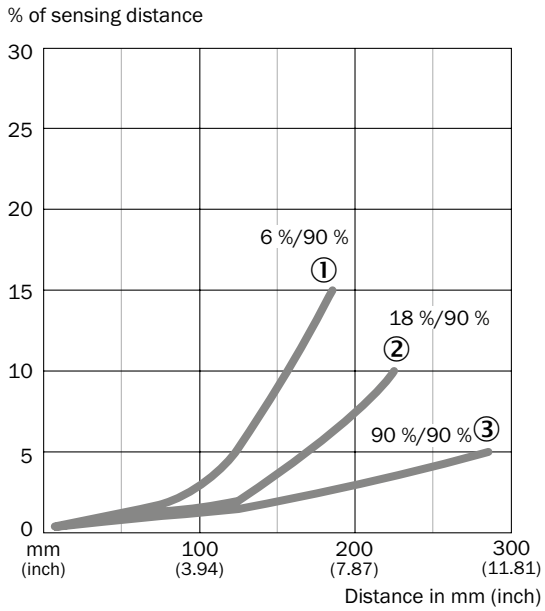

WTB4S-3, 500 mm

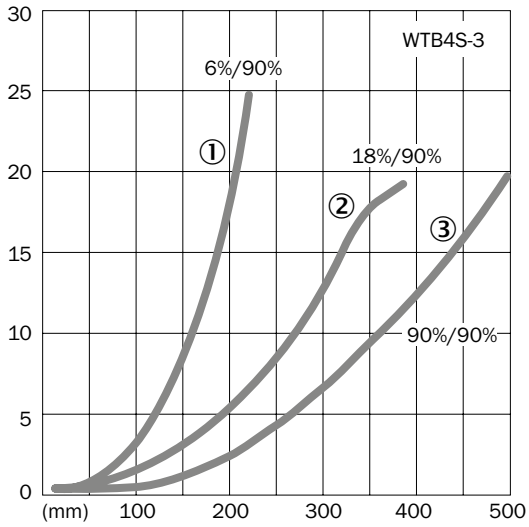

① Sensing range on black, 6 % remission
② Sensing range on gray, 18 % remission
③ Sensing range on white, 90 % remission

F

Operating reserve

WL4S-3, 4 m

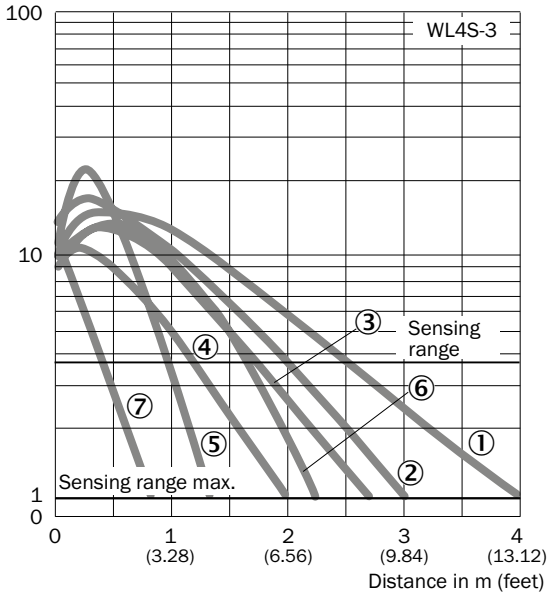

① PL80A
② P250F
③ PL40A
④ PL20A
⑤ PL10F
⑥ P250 CHEM
⑦ REF-IRF-56

WL4S-3, 5 m

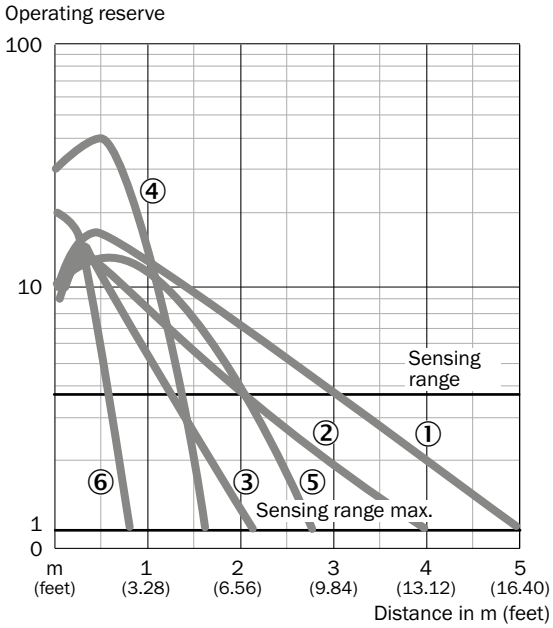

① PL80A
② PL40A
③ PL20A
④ PL10F
⑤ P250 CHEM
⑥ REF-IRF-56

WSE4S-3V, WSE4S-3H

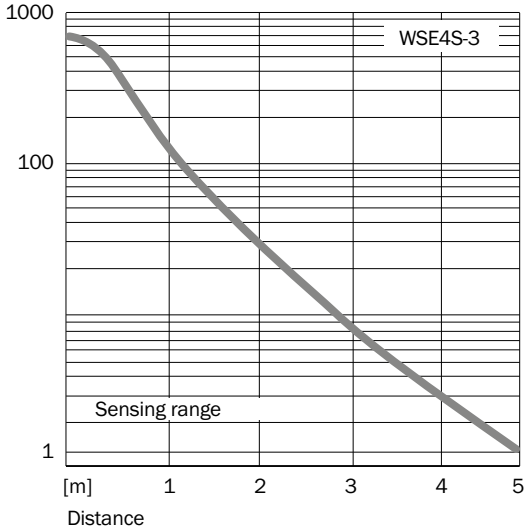

F

Bar diagrams

WTB4S-3, 120 mm

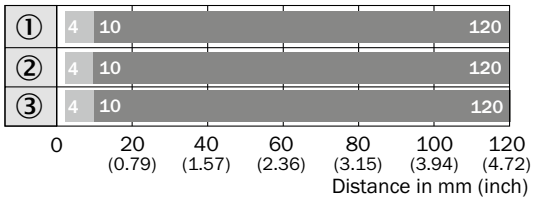

Sensing range Sensing range max.

① Sensing range on black, 6 % remission
② Sensing range on gray, 18 % remission
③ Sensing range on white, 90 % remission

WTB4S-3, 280 mm

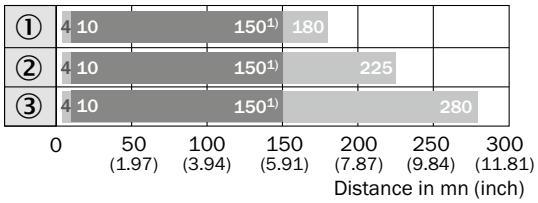

Operating distance Sensing distance typ. max.

① Sensing distance on black, 6 % remission
② Sensing distance on grey, 18 % remission
③ Sensing distance on whitw, 90 % remission

[1)] Due to the focus of the light spot at 100 mm (3.94 inch)

WTB4S-3, 500 mm

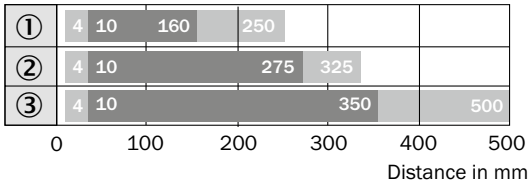

Sensing range Sensing range max.

① Sensing range on black, 6 % remission
② Sensing range on gray, 18 % remission
③ Sensing range on white, 90 % remission

WL4S-3, 4 m

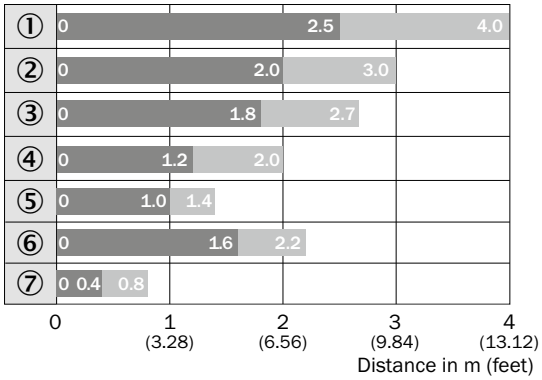

Sensing range Sensing range max.

① PL80A
② P250F
③ PL40A
④ PL20A
⑤ PL10F
⑥ P250 CHEM
⑦ REF-IRF-56

F

WL4S-3, 5 m

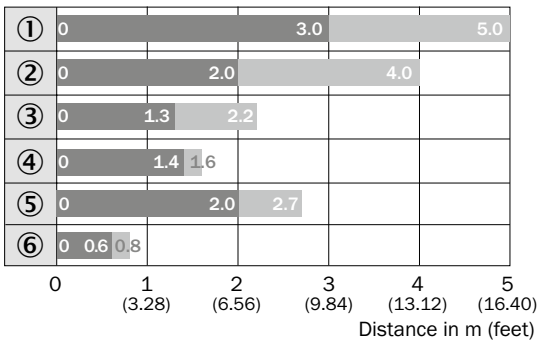

① PL80A
② PL40A
③ PL20A
④ PL10F
⑤ P250 CHEM
⑥ REF-IRF-56

WSE4S-3

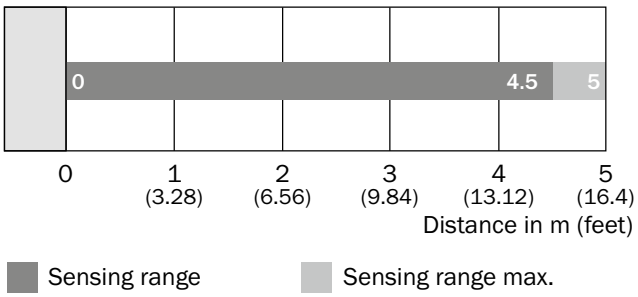

Connection diagram

F

Cd-044

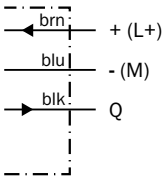

Cd-045

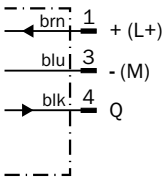

Cd-061

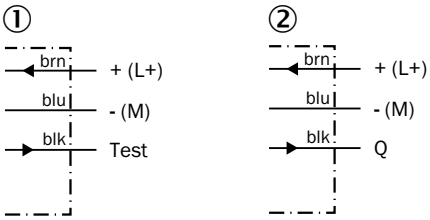

① Sender
② Receiver

Cd-069

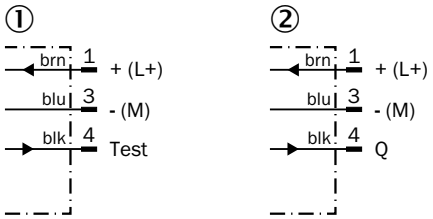

① Sender
② Receiver

Cd-083

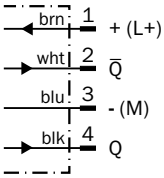

Cd-092

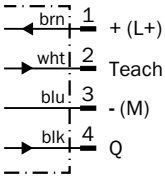

Cd-094

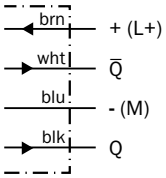

Cd-107

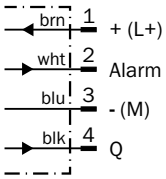

Recommended accessories

Plug connectors and cables

Connecting cable (female connector-open), hygienic systems

- **Cable material:** PVC
- **Connector material:** PVC

Figure	Connection type head A	Connection type head B	Connecting cable	Enclosure rating	Model name	Part no.
	Female connector, M8, 3-pin, straight	Cable, open conductor heads	2 m, 3-wire	IP 67, IP 69K	DOL-0803-G02MN	6033664
			5 m, 3-wire	IP 67, IP 69K	DOL-0803-G05MN	6033665
	Female connector, M8, 3-pin, angled	Cable, open conductor heads	2 m, 3-wire	IP 67, IP 69K	DOL-0803-W02MN	6033667
			5 m, 3-wire	IP 67, IP 69K	DOL-0803-W05MN	6033668
	Female connector, M8, 4-pin, straight	Cable, open conductor heads	2 m, 4-wire	IP 67, IP 69K	DOL-0804-G02MN	6033670
			5 m, 4-wire	IP 67, IP 69K	DOL-0804-G05MN	6033671
	Female connector, M8, 4-pin, angled	Cable, open conductor heads	2 m, 4-wire	IP 67, IP 69K	DOL-0804-W02MN	6033673
			5 m, 4-wire	IP 67, IP 69K	DOL-0804-W05MN	6033674
	Female connector, M12, 4-pin, straight	Cable, open conductor heads	2 m, 4-wire	IP 67, IP 69K	DOL-1204-G02MN	6028128
			5 m, 4-wire	IP 67, IP 69K	DOL-1204-G05MN	6028130
	Female connector, M12, 4-pin, angled	Cable, open conductor heads	2 m, 4-wire	IP 67, IP 69K	DOL-1204-W02MN	6028129
			5 m, 4-wire	IP 67, IP 69K	DOL-1204-W05MN	6028131

F

Female connector (ready to assemble)

Figure	Connection type head A	Connection type head B	Connector material	Enclosure rating	Model name	Part no.
	Female connector, M8, 3-pin, straight	Screw-type terminals	PBT	IP 67	DOS-0803-G	7902077
	Female connector, M8, 4-pin, straight	Screw-type terminals	PBT	IP 67	DOS-0804-G	6009974
	Female connector, M12, 4-pin, straight	Screw-type terminals	PBT	IP 67	DOS-1204-GN	6028357

Male connector (ready to assemble)

Figure	Connection type head A	Connection type head B	Connector material	Enclosure rating	Model name	Part no.
	Male connector, M8, 3-pin, straight	Screw-type terminals	PBT	IP 67	STE-0803-G	6037322
	Male connector, M8, 4-pin, straight	Screw-type terminals	PBT	IP 67	STE-0804-G	6037323
	Male connector, M12, 4-pin, straight	Screw-type terminals	PBT	IP 67	STE-1204-GN	6028359

Universal bar clamp systems

Figure	Material	Description	Model name	Part no.
	Stainless steel 1.4571 (sheet), Stainless steel 1.4408 (clamp)	Plate N02N for universal clamp bracket	BEF-KHS-N02N	2051618

Reflectors

Angular

Figure	Material	Description	Model name	Part no.
	Plastic	Chemically resistant, screw connection, 47 mm x 47 mm	P250 CHEM	5321097
	PMMA/ABS	Rectangular, screw connection, 80 mm x 80 mm	PL80A	1003865

Fine triple reflectors

Figure	Material	Description	Model name	Part no.
	Plastic	Fine triple, chemically resistant, screw connection, 18 mm x 18 mm	PL10F CHEM	5321636
		Fine triple, chemically resistant, screw connection, suitable for laser sensors, 16 mm x 38 mm	PL20F-CHEM	5326089

F

Reflective tape

Figure	Description	Model name	Part no.
	Self-adhesive, 50 mm x 60 mm	REF-IRF-56	5314244

Special reflectors

Figure	Material	Description	Model name	Part no.
	Plastic	Chemically resistant, screw connection, 38 mm x 15 mm	PL20 CHEM	5321089
	PMMA/ABS	Antifog, for prevention of moisture fogging on the reflection area, screw connection, 56 mm x 37 mm	PL40A Antifog	5322011
	Plastic	Rectangular, screw connection M3, countersunk screw head, chemical resistent, 56 mm x 37 mm	PL40B-CHEM	5326088

Figure	Material	Description	Model name	Part no.
	Stainless steel V4A (1.4404, 316L)	Stainless steel reflector, hygienic design, chemically resistant, Enclosure rating IP 69K, D12-adapter shaft, 25 mm x 25 mm	PLH25-D12	2063404
		Stainless steel reflector, hygienic design, chemically resistant, Enclosure rating IP 69K, M12-adapter thread, 25 mm x 25 mm	PLH25-M12	2063403
		Stainless steel reflector, wash-down design, chemically resistant, Enclosure rating IP 69K, screw connection, 14 mm x 14 mm	PLV14-A	2063405

→ **For additional accessories, please see page L-861**

F

Reliable detection of transparent objects

F

Product description

The WLG4S-3 Inox is a photoelectric retro-reflective sensor designed to detect transparent objects. The WashDown-Design combines a rugged and water tight IP 69K stainless steel housing with “best-in-class” optical functionality. The continuous threshold adaptation (AutoAdapt) of the switching threshold enables reliable transparent object detection and reduces the frequency that the sensor or reflector needs. This product family features a compact design that saves space and ensures high plant availability due to water tight teach-in pushbutton with a metal membrane and pin casting M12-connector. The stainless steel housing withstands stringent cleaning procedures in food and beverage, pharmaceutical, solar and semiconductor industries. Especially for this harsh environment chemically resistant reflectors are available as accessories.

At a glance

- IP 66, IP 67, IP 68 and IP 69K enclosure rating and Ecolab certified
- Tough stainless steel housing (316L/1.4404)
- Resistant to a variety of common cleaning and disinfection agents
- Modern electrical connection available – M12 connector with pin casting
- PinPoint LED technology provides a highly visible laser-like light spot
- Teach-in via stainless steel pushbutton with a metal membrane
- Continuous threshold adaptation (AutoAdapt) technology reliably detects objects in changing conditions

Your benefits

- Long service life in harsh conditions ensures less downtime and fewer replacement costs
- Reliable detection of all materials, including transparent objects in the pharmaceutical, packaging, and food and beverage industries
- Easy adjustment via a stainless steel metal membrane teach-in pushbutton
- Quick and easy alignment due to highly visible PinPoint emitter LED
- Remote monitoring and quick diagnostics via IO-Link (optional)

Additional information

→ **www.mysick.com/en/W4S-3_Inox_Glass**

For more information, just enter the link or scan the QR code and get direct access to technical data, CAD design models, operating instructions, software, application examples and much more.

Detailed technical data

Features

Sensor principle	Photoelectric retro-reflective sensor
Detection principle	Autocollimation
Dimensions (W x H x D)	15.25 mm x 49.2 mm x 22.2 mm
Housing design	Washdown
Housing design (light emission)	Rectangular
Sensing range max. [1]	0 m ... 5 m
Sensing range [1]	0 m ... 3 m
Type of light	Visible red light
Light source [2]	PinPoint LED
Light spot size (distance)	Ø 45 mm (1.5 m)
Wave length	650 nm
Adjustment	Cable [3]/ Cable, Single teach-in button [3] / Single teach-in button (depending on type)
Continuous threshold adaption (AutoAdapt)	✔
Special feature	Detection of transparent objects

[1] PL80A.
[2] Average service life of 100,000 h at T_A = +25 °C.
[3] External teach-in: pulse > 2 s with voltage Uv with PNP and M with NPN.

Mechanics/electronics

Supply voltage [1]	10 V DC ... 30 V DC
Ripple [2]	< 5 V_{pp}
Power consumption [3]	≤ 30 mA
Output type	PNP / NPN (depending on type)
Output function	Complementary
Switching mode	Dark-switching / Light/dark-switching (depending on type)
Output current $I_{max.}$	≤ 100 mA
Response time [4]	< 0.5 ms
Switching frequency [5]	1,000 Hz
Connection type	Male connector, M8 [6] / Male connector, M12 [7] [8] / Cable, 2 m [7] (depending on type)
Circuit protection	A [9], B [10], C [11]
Protection class	III
Weight	
Connector M8, 4-pin	40 g
Connector M12, 4-pin	45 g
Cable, 4-wire	80 g
Polarisation filter	✔

F

Housing material	Stainless steel 316L
Enclosure rating	IP 66, IP 67, IP 68, IP 69K [12]
Ambient operating temperature	–30 °C ... +60 °C / –30 °C ... +70 °C [13]
Ambient storage temperature	–30 °C ... +75 °C

[1] Limit values, reverse-polarity protected, operation in short-circuit protected network: max. 8 A.
[2] May not exceed or fall short of V_S tolerances.
[3] Without load.
[4] Signal transit time with resistive load.
[5] With light/dark ratio 1:1.
[6] Tightening torque, max.: 0.6 Nm.
[7] Do not bend below 0 °C.
[8] Tightening torque, max.: 0.7 Nm.
[9] A = V_S connections reverse-polarity protected.
[10] B = inputs and output reverse-polarity protected.
[11] C = interference suppression.
[12] Only in case of correctly mounted IP 69K connecting cable.
[13] At UV ≤ 24 V and IA < 30 mA.

Ordering information

Other models available at www.mysick.com/en/W4S-3_Inox_Glass

WLG4S-3V

Sensing range max. [1]	Output type	Switching mode	Adjustment	Connection	Connection diagram	Model name	Part no.
0 m ... 5 m	PNP	Dark-switching	Cable [2]	Connector M8, 4-pin	Cd-092	WLG4S-3F2235V	1045098
			Cable, Single teach-in button [2]	Connector M8, 4-pin	Cd-092	WLG4S-3F2234V	1047653
				Connector M12, 4-pin, PVC	Cd-092	WLG4S-3F2434V	1054727
		Light/dark-switching	Single teach-in button	Cable, 4-wire, 2 m, PVC	Cd-093	WLG4S-3P1132V	1055044
				Connector M8, 4-pin	Cd-083	WLG4S-3P2232V	1046446
				Connector M12, 4-pin, PVC	Cd-083	WLG4S-3P2432V	1054725
	NPN	Dark-switching	Cable [2]	Cable, 4-wire, 2 m, PVC	Cd-093	WLG4S-3E1135V	1046438
			Cable, Single teach-in button [2]	Cable, 4-wire, 2 m, PVC	Cd-093	WLG4S-3E1134V	1048027
		Light/dark-switching	Single teach-in button	Cable, 4-wire, 2 m, PVC	Cd-093	WLG4S-3N1132V	1046450
				Connector M12, 4-pin, PVC	Cd-083	WLG4S-3N2432V	1054728

[1] PL80A.
[2] External teach-in: pulse > 2 s with voltage Uv with PNP and M with NPN.

WLG4S-3V Alarm output

Sensing range max. [1]	Output type	Switching mode	Adjustment	Connection	Connection diagram	Model name	Part no.
0 m ... 5 m	PNP	Dark-switching	Single teach-in button	Connector M8, 4-pin	Cd-107	WLG4S-3V2232V	1046447

[1] PL80A.

Dimensional drawings

Dimensions in mm (inch)

WLG4S-3V, without single teach-in button

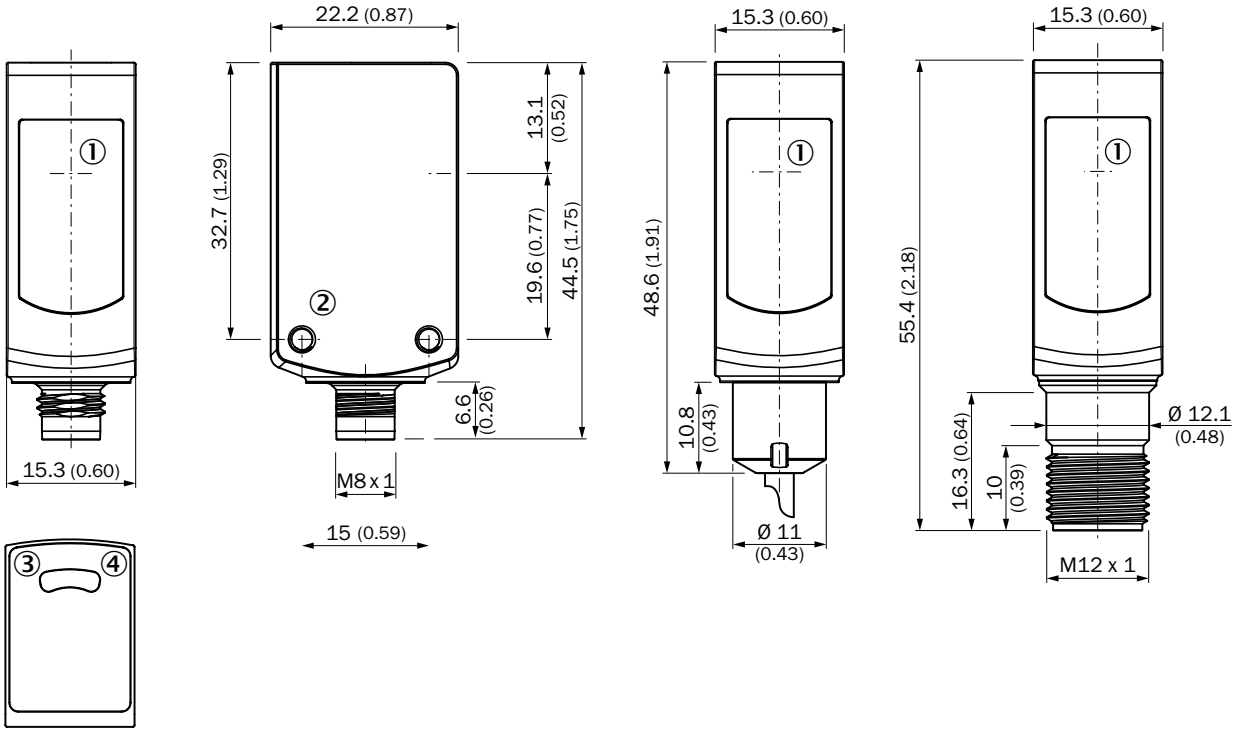

① Center of optical axis
② Threaded mounting hole M3
③ Status indicator LED, yellow: Status of received light beam
④ Status indicator LED green: power on

WLG4S-3V, with single teach-in button

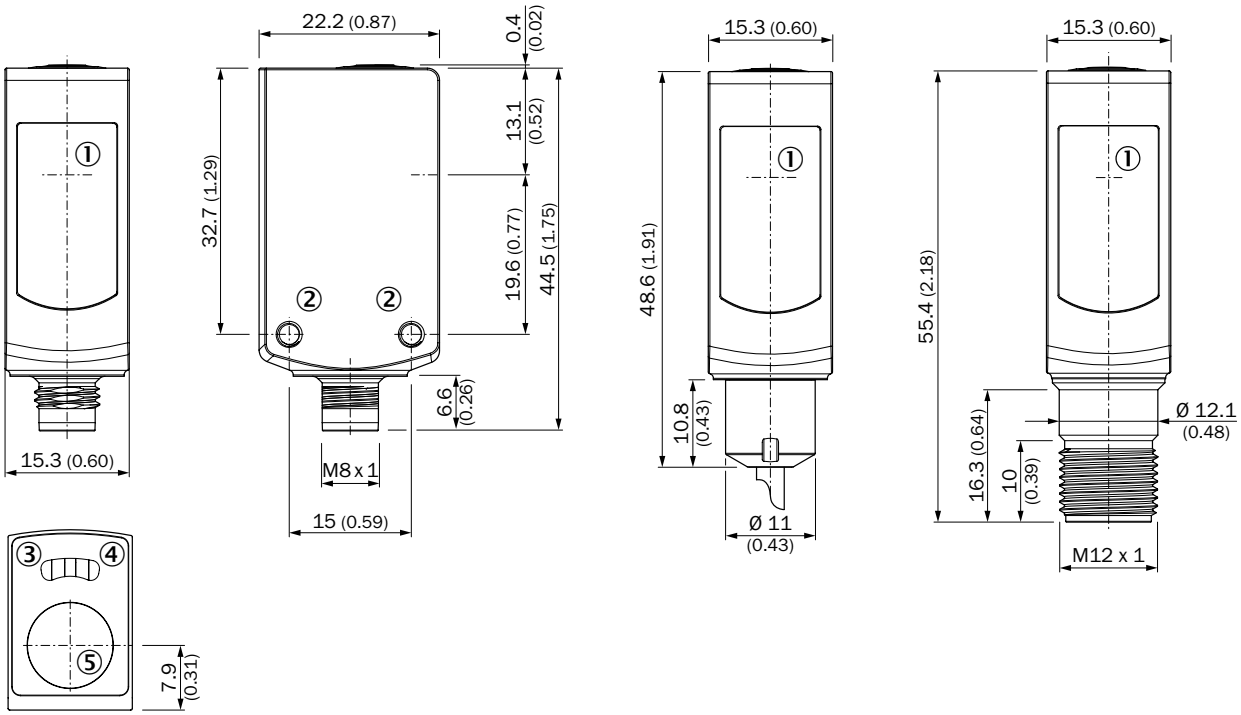

① Center of optical axis
② Threaded mounting hole M3
③ Status indicator LED, yellow: Status of received light beam
④ Status indicator LED green: power on
⑤ Teach-in button

Characteristic curves

WLG4S-3, 5 m

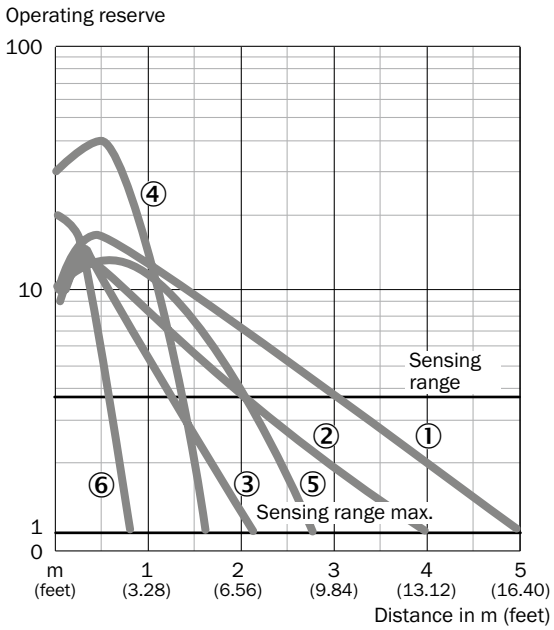

① PL80A
② PL40A
③ PL20A
④ PL10F
⑤ P250 CHEM
⑥ REF-IRF-56

Bar diagrams

WLG4S-3, 5 m

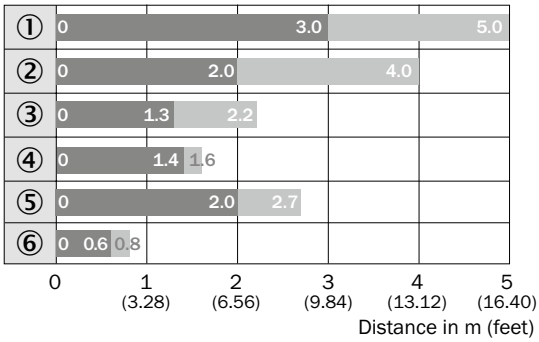

Sensing range Sensing range max.

① PL80A
② PL40A
③ PL20A
④ PL10F
⑤ P250 CHEM
⑥ REF-IRF-56

F

Connection diagram

Cd-083

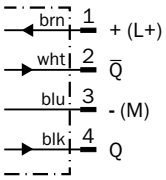

Cd-092

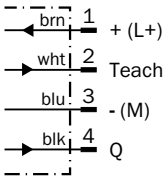

Cd-093

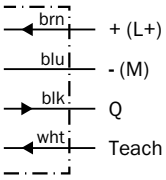

Cd-107

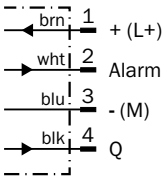

Recommended accessories

Plug connectors and cables

Connecting cable (female connector-open), hygienic systems

- **Cable material:** PVC
- **Connector material:** PVC

Figure	Connection type head A	Connection type head B	Connecting cable	Enclosure rating	Model name	Part no.
	Female connector, M8, 4-pin, straight	Cable, open conductor heads	2 m, 4-wire	IP 67, IP 69K	DOL-0804-G02MN	6033670
			5 m, 4-wire	IP 67, IP 69K	DOL-0804-G05MN	6033671
	Female connector, M8, 4-pin, angled	Cable, open conductor heads	2 m, 4-wire	IP 67, IP 69K	DOL-0804-W02MN	6033673
			5 m, 4-wire	IP 67, IP 69K	DOL-0804-W05MN	6033674
	Female connector, M12, 4-pin, straight	Cable, open conductor heads	2 m, 4-wire	IP 67, IP 69K	DOL-1204-G02MN	6028128
			5 m, 4-wire	IP 67, IP 69K	DOL-1204-G05MN	6028130
	Female connector, M12, 4-pin, angled	Cable, open conductor heads	2 m, 4-wire	IP 67, IP 69K	DOL-1204-W02MN	6028129
			5 m, 4-wire	IP 67, IP 69K	DOL-1204-W05MN	6028131

Universal bar clamp systems

Figure	Material	Description	Model name	Part no.
	Stainless steel 1.4571 (sheet), Stainless steel 1.4408 (clamp)	Plate N02N for universal clamp bracket	BEF-KHS-N02N	2051618

F

Reflectors

Angular

Figure	Material	Description	Model name	Part no.
	Plastic	Chemically resistant, screw connection, 47 mm x 47 mm	P250 CHEM	5321097
	PMMA/ABS	Rectangular, screw connection, 80 mm x 80 mm	PL80A	1003865

Fine triple reflectors

Figure	Material	Description	Model name	Part no.
	PMMA/ABS	Fine triple, screw connection, suitable for laser sensors, 47 mm x 47 mm	P250F	5308843
	Plastic	Fine triple, chemically resistant, screw connection, 18 mm x 18 mm	PL10F CHEM	5321636
		Fine triple, chemically resistant, screw connection, suitable for laser sensors, 16 mm x 38 mm	PL20F-CHEM	5326089

Figure	Material	Description	Model name	Part no.
	PMMA/ABS	Fine triple, screw connection, suitable for laser sensors, 56 mm x 28 mm	PL30F	5326523
		Fine triple, screw connection, suitable for laser sensors, 76 mm x 45 mm	PL81-1F	5325060

Reflective tape

Figure	Description	Model name	Part no.
	Suitable for laser sensors, self-adhesive, cut, see alignment note, 56.3 mm x 56.3 mm	REF-AC1000-56	4063030

Special reflectors

Figure	Material	Description	Model name	Part no.
	PMMA/ABS	Antifog, for prevention of moisture fogging on the reflection area, screw connection, 56 mm x 37 mm	PL40A Antifog	5322011
	Stainless steel V4A (1.4404, 316L)	Stainless steel reflector, hygienic design, chemically resistant, Enclosure rating IP 69K, D12-adapter shaft, 25 mm x 25 mm	PLH25-D12	2063404
		Stainless steel reflector, hygienic design, chemically resistant, Enclosure rating IP 69K, M12-adapter thread, 25 mm x 25 mm	PLH25-M12	2063403
		Stainless steel reflector, wash-down design, chemically resistant, Enclosure rating IP 69K, screw connection, 14 mm x 14 mm	PLV14-A	2063405

→ **For additional accessories, please see page L-861**

F

F

Highest reliability, maximum resistance and endless possibilities

STAIN-LESS STEEL | IP 69K | SIRIC®

F

Product description

The W4S-3 Inox Hygiene series of photoelectric sensors combines hygienic requirements based on EHEDG with best-in-class performance. These sensors are completely enclosed in a stainless steel housing and can be taught via a stainless steel teach button with a metal membrane. With built in protection for the sensor cable, no additional mounting brackets or mounting holes are required for in-process machine integration. These sensors are designed for a completely hygienic sensor solution that is a necessity for the most hygienic machines.

At a glance

- Smooth stainless steel housing (316L/1.4404)
- Hygienic mounting using M12-adapter thread or D12-adapter shaft
- IP 66, IP 67, IP 68 and IP 69K enclosure rating and Ecolab certified
- Resistant to a variety of common cleaning and disinfection agents
- Highly visible laser-like light spot due to PinPoint LED
- Teach-in via stainless steel pushbutton with a metal membrane

Your benefits

- Smooth hygienic housing and accessories with no grooves or crevices eliminates the potential for bacteria to grow, providing a more hygienic solution.
- Long service life in harsh conditions ensures less downtime and fewer replacement costs
- Easy adjustment via a stainless steel metal membrane teach-in pushbutton
- Quick and easy alignment due to highly visible PinPoint emitter LED

Additional information

→ **www.mysick.com/en/W4S-3_Inox_Hygiene**

For more information, just enter the link or scan the QR code and get direct access to technical data, CAD design models, operating instructions, software, application examples and much more.

Detailed technical data

Features

	WTB4S-3H	WTF4S-3H	WL4S-3H	WSE4S-3H
Sensor principle	Photoelectric proximity sensor		Photoelectric retro-reflective sensor	Through-beam photoelectric sensor
Detection principle	Background suppression	Foreground suppression	Autocollimation	–
Dimensions (W x H x D)	15.25 mm x 48.6 mm x 22.15 mm / 15.25 mm x 63.2 mm x 22.15 mm (depending on type)			
Housing design	Hygiene			
Housing design (light emission)	Rectangular			
Sensing range max.	4 mm ... 500 mm [1] (depending on type)	20 mm ... 200 mm [1]	0 m ... 5 m [2] (depending on type)	0 m ... 5 m
Sensing range	10 mm ... 350 mm [1] (depending on type)	–	0 m ... 3 m [2] (depending on type)	0 m ... 4.5 m
Type of light	Visible red light			
Light source [3]	PinPoint LED			
Wave length	650 nm			
Adjustment	Cable [4] / Single teach-in button / Cable, Single teach-in button [4] (depending on type)	Cable, Single teach-in button [4]	Single teach-in button	–

[1] Object with 90 % reflectance (referred to standard white, DIN 5033)
[2] PL80A.
[3] Average service life of 100,000 h at T_A = +25 °C.
[4] External teach-in: pulse > 2 s with voltage Uv with PNP and M with NPN.

F

Mechanics/electronics

	WTB4S-3H	WTF4S-3H	WL4S-3H	WSE4S-3H
Supply voltage [1]	10 V DC ... 30 V DC			
Ripple [2]	< 5 V_{pp}			
Power consumption	≤ 30 mA [3]			≤ 20 mA [4]
Output type	PNP / NPN (depending on type)			
Output function	Complementary	–	Complementary	
Switching mode	Light switching / Light/dark-switching (depending on type)	Light switching	Light/dark-switching	Light switching Dark-switching Light/dark-switching (depending on type)
Output current $I_{max.}$	≤ 100 mA			
Response time [5]	< 0.5 ms			
Switching frequency [6]	1,000 Hz			
Connection type	Cable, 2 m [7] / Male connector, M8 [8] /Cable with connector, M8, 150 mm [7] [8] (depending on type)			
Mechanical connection	M12 adapter thread / D12 adapter shaft (depending on type)	M12 adapter thread	M12 adapter thread / D12 adapter shaft (depending on type)	
Circuit protection	A [9], B [10], C [11]			
Protection class	III			
Weight				
Cable [7]	80 g	–	80 g	–
Connector [8]	140 g	50 g	40 g	140 g
Cable with connector [7] [8]	50 g			

	WTB4S-3H	WTF4S-3H	WL4S-3H	WSE4S-3H
Polarisation filter	–		✔	–
Housing material	Stainless steel 316L			
Enclosure rating	IP 66, IP 67, IP 68, IP 69K			
Test input sender off	–			“Test” to 0 V
Ambient operating temperature	–30 °C ... +60 °C / –30 °C ... +70 °C [12]			
Ambient storage temperature	–30 °C ... +75 °C			

[1] Limit values, reverse-polarity protected, operation in short-circuit protected network: max. 8 A.
[2] May not exceed or fall short of V_S tolerances.
[3] Without load.
[4] Sender.
[5] Signal transit time with resistive load.
[6] With light/dark ratio 1:1.
[7] Do not bend below 0 °C.
[8] Tightening torque, max.: 0.6 Nm.
[9] A = V_S connections reverse-polarity protected.
[10] B = inputs and output reverse-polarity protected.
[11] C = interference suppression.
[12] At UV ≤ 24 V and IA < 30 mA.

Ordering information

Other models available at www.mysick.com/en/W4S-3_Inox_Hygiene

F

WTB4S-3H

- **Sensor principle:** photoelectric proximity sensor
- **Detection principle:** background suppression

Sensing range max. [1]	Light spot size (distance)	Mechanical connection	Output type	Switching mode	Adjustment	Connection	Connection diagram	Model name	Part no.
4 mm ... 120 mm	Ø 2.5 mm (50 mm)	M12 adapter thread	PNP	Light switching	Cable [2]	Cable with connector M8, 4-pin, 150 mm, PVC	Cd-092	WTB4S-3P3235H	1048100
				Light/dark-switching	Single teach-in button		Cd-083	WTB4S-3P3232H	1048096
			NPN	Light switching	Cable [2]	Cable, 4-wire, 2 m, PVC	Cd-093	WTB4S-3N1135H	1048101
				Light/dark-switching	Single teach-in button	Cable, 4-wire, 2 m, PVC	Cd-094	WTB4S-3N1132H	1048098
		D12 adapter shaft	PNP	Light/dark-switching	Single teach-in button	Connector M8, 4-pin	Cd-083	WTB4S-3P5232H	1054864
				Light switching	Cable, Single teach-in button [2]	Connector M8, 4-pin	Cd-083	WTB4S-3P5204HS02	1054865
4 mm ... 500 mm	Ø 6.5 mm (150 mm)	M12 adapter thread	PNP	Light switching	Cable, Single teach-in button	Cable, 4-wire, 2 m, PVC	Cd-094	WTB4S-3P1162H	1051983
					Cable [2]	Cable with connector M8, 4-pin, 150 mm, PVC	Cd-092	WTB4S-3P3265H	1048102
				Light/dark-switching	Single teach-in button		Cd-083	WTB4S-3P3262H	1048094
			NPN	Light switching	Cable [2]	Cable, 4-wire, 2 m, PVC	Cd-093	WTB4S-3N1165H	1048107
				Light/dark-switching	Single teach-in button	Cable, 4-wire, 2 m, PVC	Cd-094	WTB4S-3N1162H	1048095

[1] Object with 90 % reflectance (referred to standard white, DIN 5033)
[2] External teach-in: pulse > 2 s with voltage Uv with PNP and M with NPN.

WTF4S-3H

- **Sensor principle:** photoelectric proximity sensor
- **Detection principle:** foreground suppression

Sensing range max. [1]	Light spot size (distance)	Mechanical connection	Output type	Switching mode	Adjustment [2]	Connection	Connection diagram	Model name	Part no.
20 mm ... 200 mm	Ø 6.5 mm (150 mm)	M12 adapter thread	PNP	Light switching	Cable, Single teach-in button	Cable with connector M8, 4-pin, 150 mm, PVC	Cd-092	WTF4S-3P3264H	1048109

[1] Object with 90 % reflectance (referred to standard white, DIN 5033)

[2] External teach-in: pulse > 2 s with voltage Uv with PNP and M with NPN.

WL4S-3H

- **Sensor principle:** photoelectric retro-reflective sensor
- **Detection principle:** autocollimation

Sensing range max. [1]	Light spot size (distance)	Mechanical connection	Output type	Switching mode	Adjustment	Connection	Connection diagram	Model name	Part no.
0 m ... 4 m	Ø 45 mm (1,5 mm)	M12 adapter thread	PNP	Light/dark-switching	–	Cable with connector M8, 4-pin, 150 mm, PVC	Cd-083	WL4S-3P3230H	1048115
			NPN	Light/dark-switching	–	Cable, 4-wire, 2 m, PVC	Cd-094	WL4S-3N1130H	1048116
		D12 adapter shaft	PNP	Light/dark-switching	–	Connector M8, 4-pin	Cd-083	WL4S-3P5230H	1057052
0 m ... 5 m	Ø 45 mm (1,5 mm)	M12 adapter thread	PNP	Light/dark-switching	Single teach-in button	Cable with connector M8, 4-pin, 150 mm, PVC	Cd-083	WL4S-3P3232H	1048117
			NPN	Light/dark-switching	Single teach-in button	Cable, 4-wire, 2 m, PVC	Cd-094	WL4S-3N1132H	1048119

[1] PL80A.

WL4S-3H, Alarm output

- **Sensor principle:** photoelectric retro-reflective sensor
- **Detection principle:** autocollimation

Sensing range max. [1]	Light spot size (distance)	Mechanical connection	Output type	Switching mode	Adjustment	Connection	Connection diagram	Model name	Part no.
0 m ... 5 m	Ø 45 mm (1,5 mm)	M12 adapter thread	PNP	Light/dark-switching	Single teach-in button	Cable with connector M8, 4-pin, 150 mm, PVC	Cd-107	WL4S-3V3232H	1048118

[1] PL80A.

F

F

WSE4S-3H

- **Sensor principle:** through-beam photoelectric sensor

Sensing range max.	Light spot size (distance)	Mechanical connection	Output type	Switching mode	Connection	Connection diagram	Model name	Part no.
0 m ... 5 m	Ø 50 mm (2 mm)	M12 adapter thread	PNP	Light switching	Cable with connector M8, 3-pin, 150 mm, PVC	Cd-069	WSE4S-3P3130H	1052888
				Dark-switching		Cd-069	WSE4S-3F3130H	1052882
			NPN	Light switching	Cable, 3-wire, 2 m, PVC	Cd-061	WSE4S-3N1330H	1052873
					Cable, 3-wire, 2 m, PVC	Cd-055	WSE4S-3N1330H	1048129
				Dark-switching	Cable, 3-wire, 2 m, PVC	Cd-055	WSE4S-3E1330H	1048130
					Cable with connector M8, 3-pin, 150 mm, PVC	Cd-069	WSE4S-3E3130H	1052870
					Cable, 3-wire, 2 m, PVC	Cd-061	WSE4S-3E1330H	1052868
		D12adapter shaft	PNP	Light/dark-switching	Cable with connector M8, 4-pin, 150 mm, PVC	Cd-072	WSE4S-3P5230H	1054896

Dimensional drawings

Dimensions in mm (inch)

WTB4S-3H, WTF4S-3H, without single teach-in button

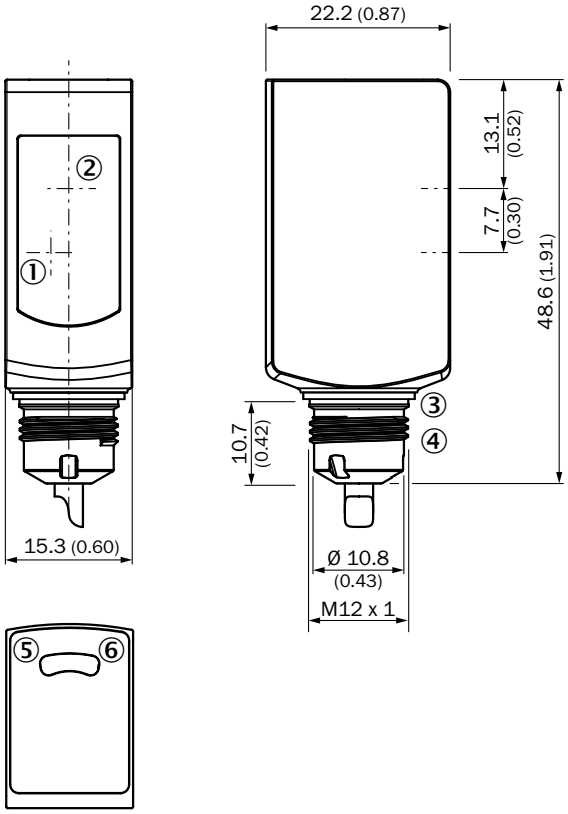

① Center of optical axis, receiver
② Center of optical axis, sender
③ Gasket (tightening torque 6Nm)
④ Connector M12
⑤ Status indicator LED, yellow: Status of received light beam
⑥ Status indicator LED green: power on

WTB4S-3H, WTF4S-3H, with single teach-in button, D12 adapter shaft, L-adaption

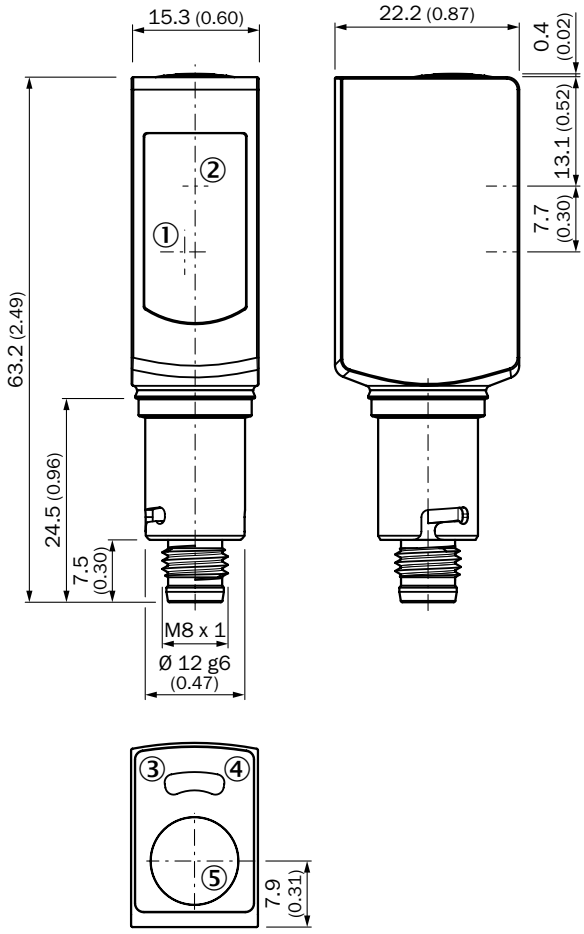

① Center of receiver's optical axis
② Center of optical axis, sender
③ Status indicator LED, yellow: Status of received light beam
④ Status indicator LED green: power on
⑤ Single teach-in button

WTB4S-3H, WTF4S-3H, with single teach-in button

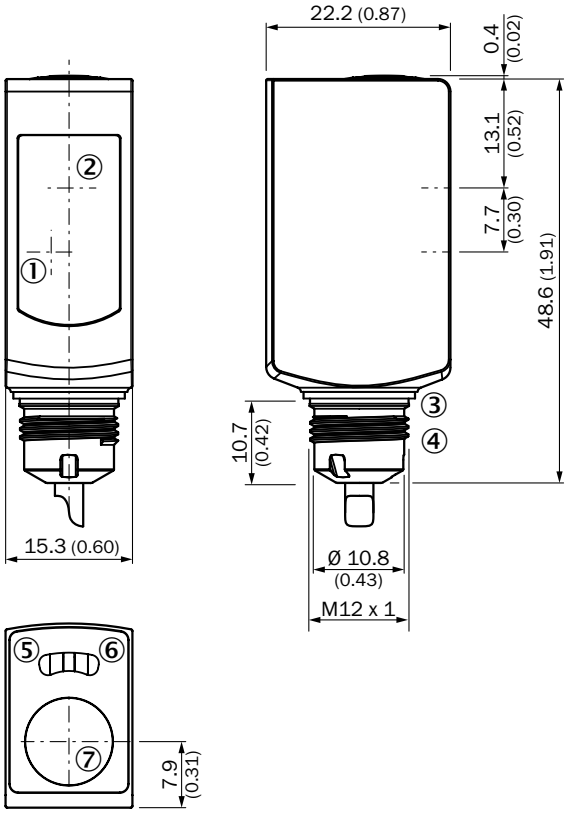

① Center of optical axis, receiver
② Center of optical axis, sender
③ Gasket (tightening torque 6Nm)
④ Connector M12
⑤ Status indicator LED, yellow: Status of received light beam
⑥ Status indicator LED green: power on
⑦ Teach-in button

WL4S-3H, without single teach-in button

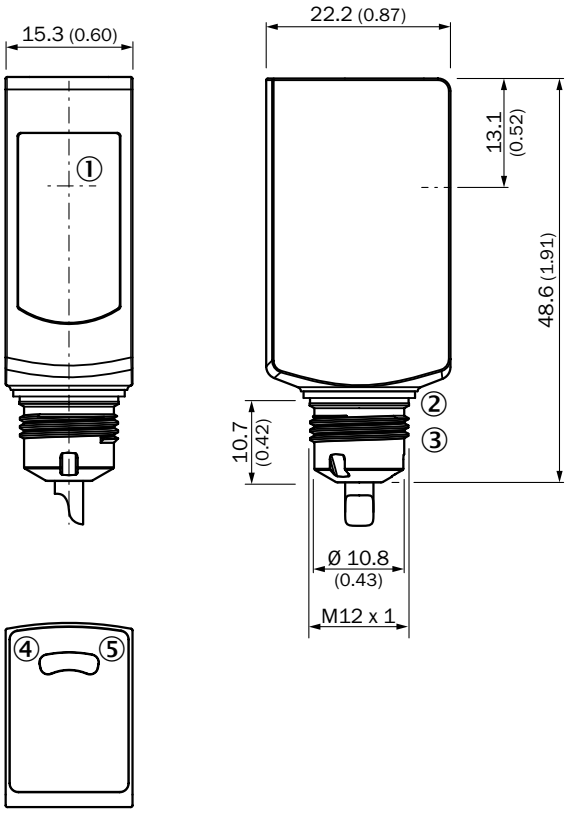

① Center of optical axis
② Gasket (tightening torque 6Nm)
③ Connector M12
④ Status indicator LED, yellow: Status of received light beam
⑤ Status indicator LED green: power on

F

F

WL4S-3H, with single teach-in button, D12 adapter shaft, l-adaption

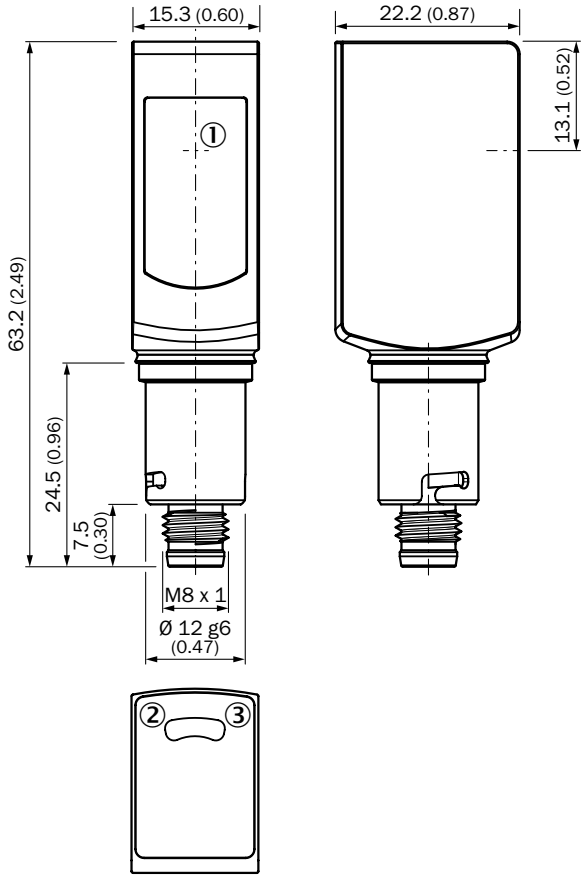

① Center of optical axis
② Status indicator LED green: power on
③ Status indicator LED, yellow: Status of received light beam

WL4S-3H, with single teach-in button

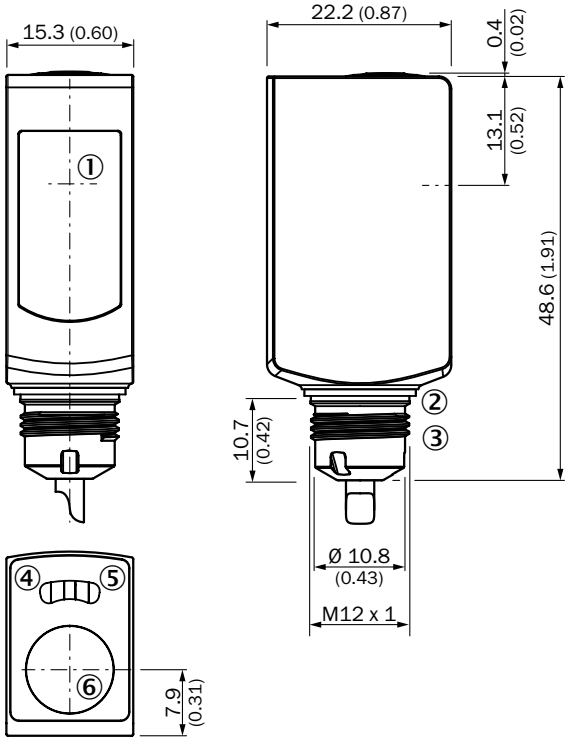

① Center of optical axis
② Gasket (tightening torque 6Nm)
③ Connector M12
④ Status indicator LED, yellow: Status of received light beam
⑤ Status indicator LED green: power on
⑥ Teach-in button

WSE4S-3H

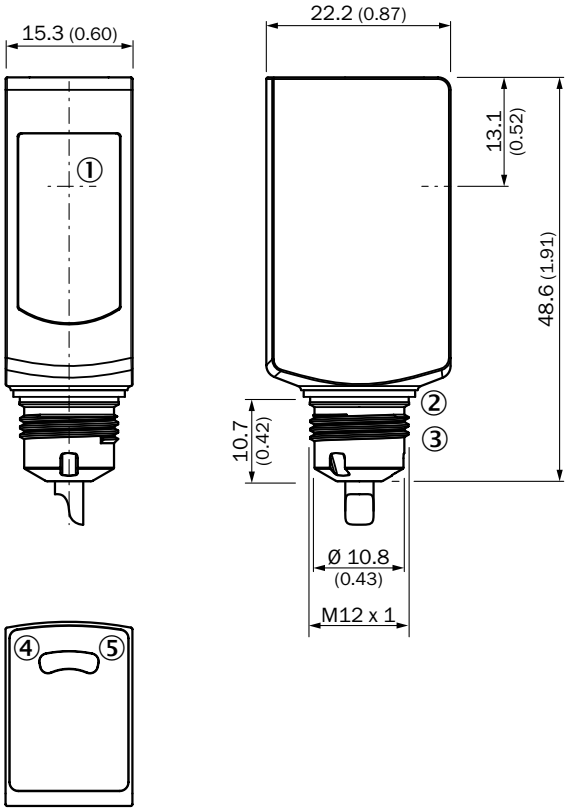

① Center of optical axis, sender (WS) and receiver (WE)
② Gasket (tightening torque 6Nm)
③ Connector M12
④ Status indicator LED, yellow: Status of received light beam
⑤ Status indicator LED green: power on

F

Characteristic curves

Black-white shift

WTB4S-3, 120 mm

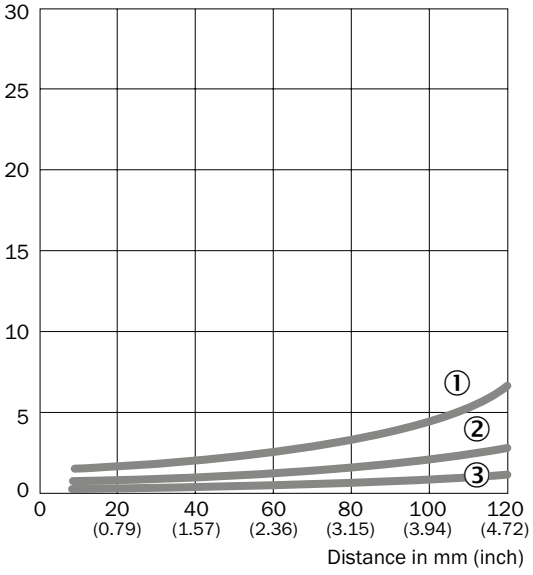

① Sensing range on black, 6 % remission
② Sensing range on gray, 18 % remission
③ Sensing range on white, 90 % remission

WTB4S-3, 500 mm

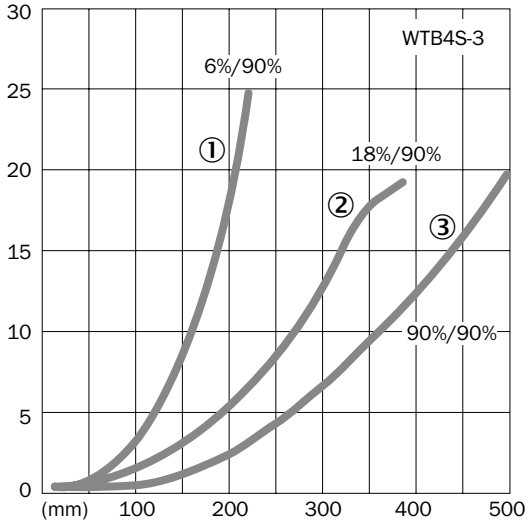

① Sensing range on black, 6 % remission
② Sensing range on gray, 18 % remission
③ Sensing range on white, 90 % remission

Operating reserve

WL4S-3, 4 m

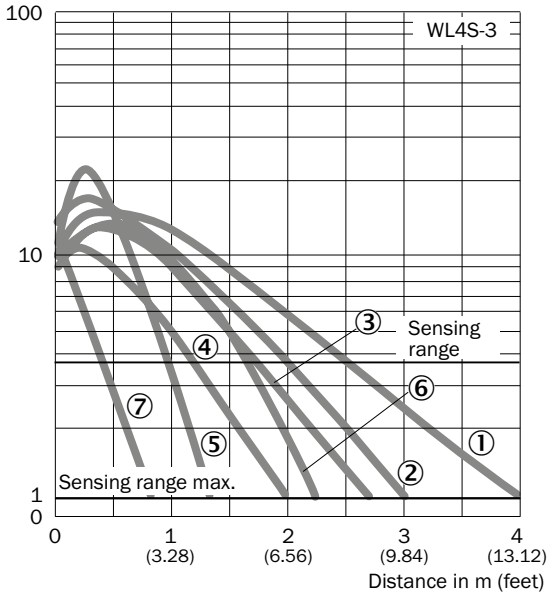

① PL80A
② P250F
③ PL40A
④ PL20A
⑤ PL10F
⑥ P250 CHEM
⑦ REF-IRF-56

WL4S-3, 5 m

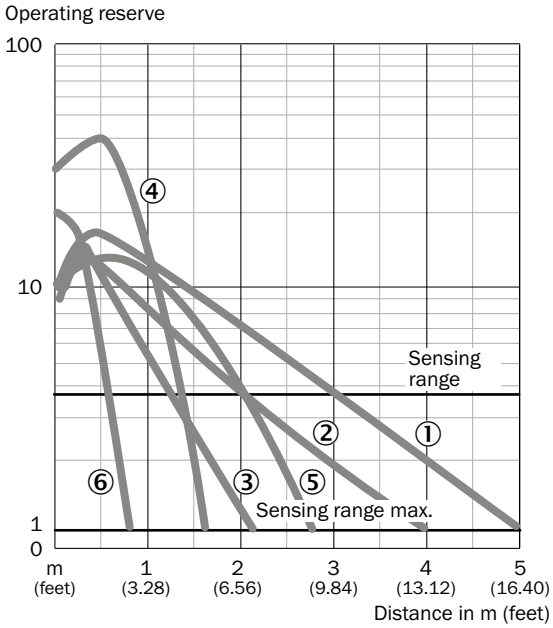

① PL80A
② PL40A
③ PL20A
④ PL10F
⑤ P250 CHEM
⑥ REF-IRF-56

WSE4S-3V, WSE4S-3H

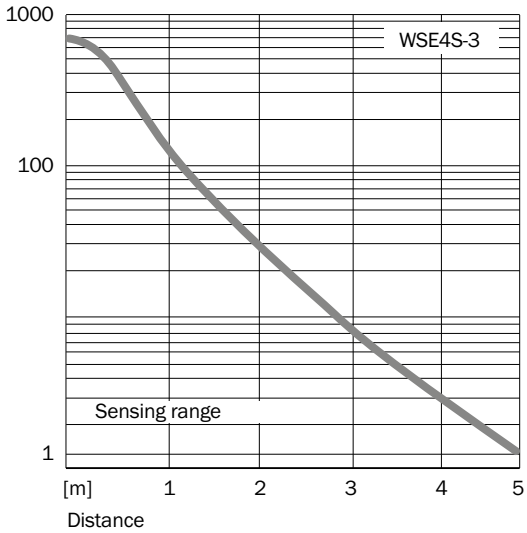

Bar diagrams

WTB4S-3, 120 mm

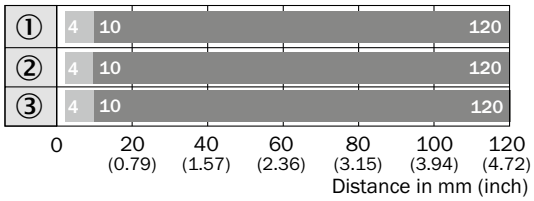

Sensing range Sensing range max.

① Sensing range on black, 6 % remission
② Sensing range on gray, 18 % remission
③ Sensing range on white, 90 % remission

WTB4S-3, 500 mm

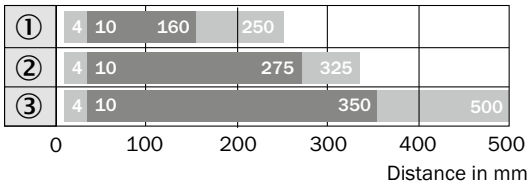

Sensing range Sensing range max.

① Sensing range on black, 6 % remission
② Sensing range on gray, 18 % remission
③ Sensing range on white, 90 % remission

WL4S-3, 4 m

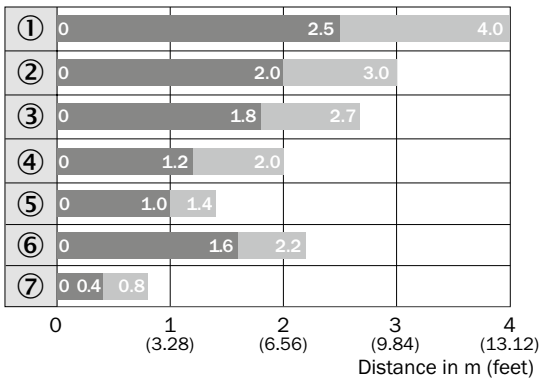

Sensing range Sensing range max.

① PL80A
② P250F
③ PL40A
④ PL20A
⑤ PL10F
⑥ P250 CHEM
⑦ REF-IRF-56

WL4S-3, 5 m

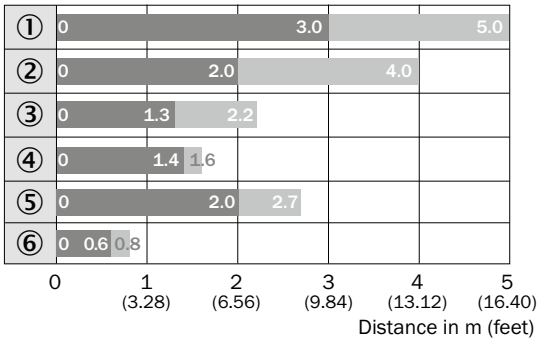

Sensing range Sensing range max.

① PL80A
② PL40A
③ PL20A
④ PL10F
⑤ P250 CHEM
⑥ REF-IRF-56

WSE4S-3

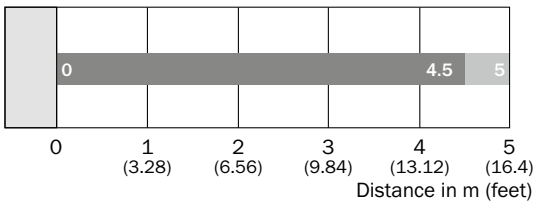

Sensing range Sensing range max.

F

Connection diagram

Cd-055

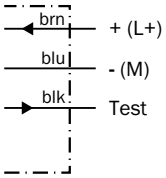

Cd-061

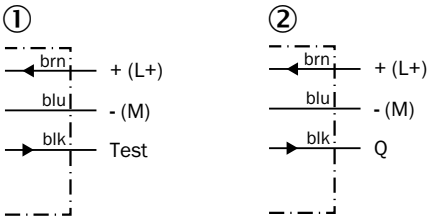

① Sender
② Receiver

Cd-069

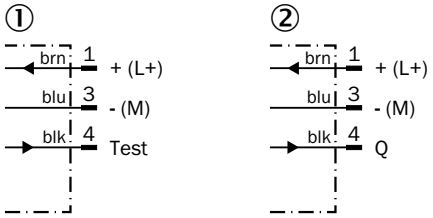

① Sender
② Receiver

Cd-072

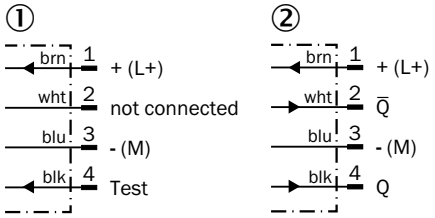

① Sender
② Receiver

F

Cd-083

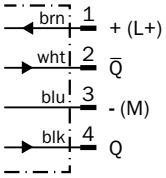

Cd-092

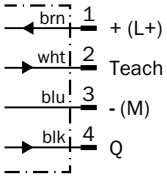

Cd-093

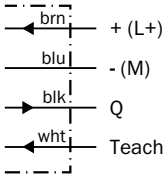

Cd-094

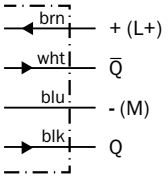

Cd-107

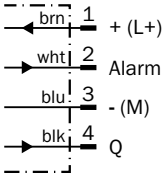

Recommended accessories

Plug connectors and cables

Connecting cable (female connector-open)M8, 4-pin, PP, hygienic systems

- **Cable material:** PP
- **Connector material:** PP

Figure	Connection type head A	Connection type head B	Connecting cable	Enclosure rating	Model name	Part no.
	Female connector, M8, 4-pin, straight	Cable, open conductor heads	2 m, 4-wire	IP 67, IP 69K	DOL-0804-G02MN	6033670
			5 m, 4-wire	IP 67, IP 69K	DOL-0804-G05MN	6033671
	Female connector, M8, 4-pin, angled	Cable, open conductor heads	2 m, 4-wire	IP 67, IP 69K	DOL-0804-W02MN	6033673
			5 m, 4-wire	IP 67, IP 69K	DOL-0804-W05MN	6033674

Universal bar clamp systems

- **For product family:** Hygienic Design BeftecHD for sensors with D12 adapter shaft

Figure	Material	Description	Model name	Part no.
	Hygienic Design, Stainless steel V4A (1.4404, 316L), Silicone (seal)	Hygienic design mounting tube with bayonet lock, 14.4 mm x 85.5 mm x 14.4 mm	BEF-HDSBR	4074403
		Hygienic design flange with seal, 40 mm x 12 mm x 40 mm	BEF-HDSF	4072880
		Hygienic design telescopic tube, straight, with bayonet lock without flange, 23 mm x 153 mm x 23 mm	BEF-HDSTRG	2067780
		Hygienic design telescopic tube, straight, with bayonet lock with flange, 40 mm x 165 mm x 40 mm	BEF-HDSTRGF	2067779
		Hygienic design telescopic tube, angled, with bayonet lock without flange, 23 mm x 125 mm x 73 mm	BEF-HDSTRW	2067778
		Hygienic design telescopic tube, angled, with bayonet lock with flange, 40 mm x 125 mm x 76 mm	BEF-HDSTRWF	2067777

Reflectors

Angular

Figure	Material	Description	Model name	Part no.
	Plastic	Chemically resistant, screw connection, 47 mm x 47 mm	P250 CHEM	5321097
	PMMA/ABS	Rectangular, screw connection, 80 mm x 80 mm	PL80A	1003865

F

Fine triple reflectors

Figure	Material	Description	Model name	Part no.
	Plastic	Fine triple, chemically resistant, screw connection, 18 mm x 18 mm	PL10F CHEM	5321636
		Fine triple, chemically resistant, screw connection, suitable for laser sensors, 16 mm x 38 mm	PL20F-CHEM	5326089

Reflective tape

Figure	Description	Model name	Part no.
	Self-adhesive, 50 mm x 60 mm	REF-IRF-56	5314244

Special reflectors

Figure	Material	Description	Model name	Part no.
	Plastic	Chemically resistant, screw connection, 38 mm x 15 mm	PL20 CHEM	5321089
	PMMA/ABS	Antifog, for prevention of moisture fogging on the reflection area, screw connection, 56 mm x 37 mm	PL40A Antifog	5322011
	Plastic	Rectangular, screw connection M3, countersunk screw head, chemical resistent, 56 mm x 37 mm	PL40B-CHEM	5326088
	Stainless steel V4A (1.4404, 316L)	Stainless steel reflector, hygienic design, chemically resistant, Enclosure rating IP 69K, D12-adapter shaft, 25 mm x 25 mm	PLH25-D12	2063404
		Stainless steel reflector, hygienic design, chemically resistant, Enclosure rating IP 69K, M12-adapter thread, 25 mm x 25 mm	PLH25-M12	2063403
		Stainless steel reflector, wash-down design, chemically resistant, Enclosure rating IP 69K, screw connection, 14 mm x 14 mm	PLV14-A	2063405

→ **For additional accessories, please see page L-861**

F

F

Reliable detection of transparent objects

F

Product description

The WLG4S-3 Inox Hygiene photoelectric retro-reflective sensors combine strict hygiene requirements based on EHEDG with best-in-class optical performance. The continuous threshold adaptation (AutoAdapt) of the switching threshold enables reliable transparent object detection and reduces the frequency that the sensor or reflector needs. Enclosed in an IP 69K stainless steel housing, these sensors can be adjusted via a stainless steel pushbutton with a metal membrane. With built-in protection for the sensor cable, no additional mounting brackets or mounting holes are required for in-process machine integration. These sensors as well as additional hygienic reflectors are designed for a completely hygienic sensor solution that is a necessity for the most hygienic machines.

At a glance

- Hygienic designed stainless steel housing and accessories (316L/1.4404)
- Hygienic mounting using M12-adapter thread or D12-adapter shaft
- IP 66, IP 67, IP 68 and IP 69K enclosure rating and Ecolab certified
- Resistant to a variety of common cleaning and disinfection agents
- PinPoint LED technology provides a highly visible laser-like light spot
- Teach-in stainless steel metal membrane or external teach-in

Your benefits

- Smooth hygienic housing and accessories with no grooves or crevices eliminates the potential for bacteria to grow, providing a more hygienic solution.
- Long service life in harsh conditions ensures less downtime and fewer replacement costs
- Reliable detection of all transparent objects in the pharmaceutical and food and beverage industries
- Quick and easy adjustment via a stainless steel metal membrane teach-in pushbutton
- Quick and easy alignment due to highly visible PinPoint emitter LED
- Remote monitoring and fast diagnostics via IO-Link (optional)

Additional information

→ **www.mysick.com/en/W4S-3_Inox_Hygiene_Glass**

For more information, just enter the link or scan the QR code and get direct access to technical data, CAD design models, operating instructions, software, application examples and much more.

Detailed technical data

Features

Sensor principle	Photoelectric retro-reflective sensor
Detection principle	Autocollimation
Dimensions (W x H x D)	15.25 mm x 63.2 mm x 22.15 mm
Housing design	Hygiene
Housing design (light emission)	Rectangular
Sensing range max. [1]	0 m ... 5 m
Sensing range [1]	0 m ... 3 m
Type of light	Visible red light
Light source [2]	PinPoint LED
Light spot size (distance)	Ø 45 mm (1.5 m)
Wave length	650 nm
Adjustment	Single teach-in button / Cable, Single teach-in button [3] / Cable [3] (depending on type)
Continuous threshold adaption (AutoAdapt)	✔
Special feature	Detection of transparent objects

[1] PL80A.
[2] Average service life of 100,000 h at T_A = +25 °C.
[3] External teach-in: pulse > 2 s with voltage Uv with PNP and M with NPN.

Mechanics/electronics

Supply voltage [1]	10 V DC ... 30 V DC
Ripple [2]	< 5 V_{pp}
Power consumption [3]	≤ 30 mA
Output type	PNP / NPN (depending on type)
Output function	Complementary
Switching mode	Light/dark-switching / Dark-switching (depending on type)
Output current $I_{max.}$	≤ 100 mA
Response time [4]	< 0.5 ms
Switching frequency [5]	1,000 Hz
Connection type	Cable, 2 m [6] / Male connector, M8 [7] / Cable with connector, M8, 150 mm [6] [7] (depending on type)
Mechanical connection	M12 adapter thread / D12 adapter shaft (depending on type)
Circuit protection	A [8], B [9], C [10]
Protection class	III
Weight	
Cable [6]	80 g
Connector [7]	140 g
Cable with connector [6] [7]	50 g
Polarisation filter	✔

F

Housing material	Stainless steel 316L
Enclosure rating	IP 66, IP 67, IP 68, IP 69K
Ambient operating temperature	–30 °C ... +60 °C / –30 °C ... +70 °C [11]
Ambient storage temperature	–30 °C ... +75 °C

[1] Limit values, reverse-polarity protected, operation in short-circuit protected network: max. 8 A.
[2] May not exceed or fall short of V_S tolerances.
[3] Without load.
[4] Signal transit time with resistive load.
[5] With light/dark ratio 1:1.
[6] Do not bend below 0 °C.
[7] Tightening torque, max.: 0.6 Nm.
[8] A = V_S connections reverse-polarity protected.
[9] B = inputs and output reverse-polarity protected.
[10] C = interference suppression.
[11] At UV ≤ 24 V and IA < 30 mA.

Ordering information

Other models available at www.mysick.com/en/W4S-3_Inox_Hygiene_Glass

WLG4S-3H

- **Sensor principle:** photoelectric retro-reflective sensor
- **Detection principle:** autocollimation

Sensing range max. [1]	Mechanical connection	Output type	Switching mode	Adjustment	Connection	Connection diagram	Model name	Part no.
0 m ... 5 m	M12 adapter thread	PNP	Light/dark-switching	Single teach-in button	Cable with connector M8, 4-pin, 150 mm, PVC	Cd-083	WLG4S-3P3232H	1048120
			Dark-switching	Cable, Single teach-in button [2]		Cd-092	WLG4S-3F3234H	1048121
		NPN	Light/dark-switching	Single teach-in button	Cable, 4-wire, 2 m, PVC	Cd-094	WLG4S-3N1132H	1048123
			Dark-switching	Cable, Single teach-in button [2]	Cable, 4-wire, 2 m, PVC	Cd-093	WLG4S-3E1134H	1048124
				Cable [2]	Cable, 4-wire, 2 m, PVC	Cd-093	WLG4S-3E1135H	1048126
	D12 adapter shaft	PNP	Light/dark-switching	Single teach-in button	Connector M8, 4-pin	Cd-083	WLG4S-3P5232H	1057053

[1] PL80A.
[2] External teach-in: pulse > 2 s with voltage Uv with PNP and M with NPN.

WLG4S-3H Alarm output

- **Sensor principle:** photoelectric retro-reflective sensor
- **Detection principle:** autocollimation

Sensing range max. [1]	Mechanical connection	Output type	Switching mode	Adjustment	Connection	Connection diagram	Model name	Part no.
0 m ... 5 m	M12 adapter thread	PNP	Dark-switching	Single teach-in button	Cable with connector M8, 4-pin, 150 mm, PVC	Cd-107	WLG4S-3V3232H	1048122

[1] PL80A.

Dimensional drawings

Dimensions in mm (inch)

WLG4S-3H, with single teach-in button

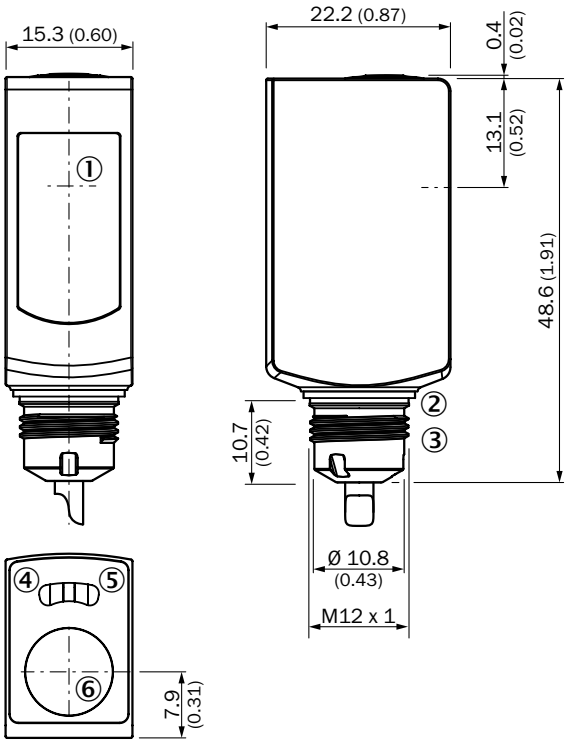

① Center of optical axis
② Gasket (tightening torque 6Nm)
③ Connector M12
④ Status indicator LED, yellow: Status of received light beam
⑤ Status indicator LED green: power on
⑥ Teach-in button

WLG4S-3H, without single teach-in button, D12 adapter shaft, l-adaption

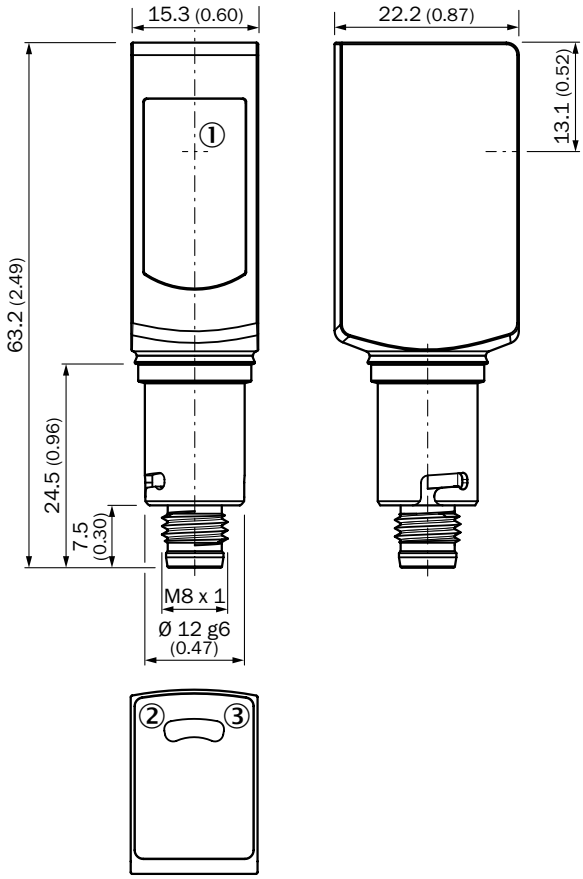

① Center of optical axis
② Status indicator LED green: power on
③ Status indicator LED, yellow: Status of received light beam

F

Characteristic curves

WLG4S-3, 5 m

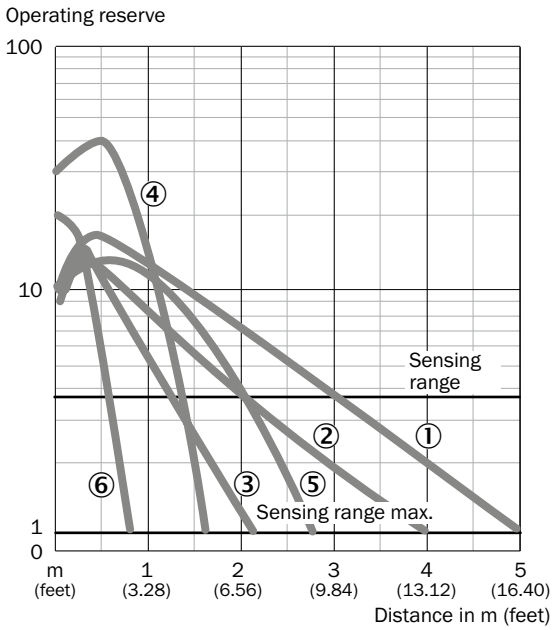

① PL80A
② PL40A
③ PL20A
④ PL10F
⑤ P250 CHEM
⑥ REF-IRF-56

Bar diagrams

WLG4S-3, 5 m

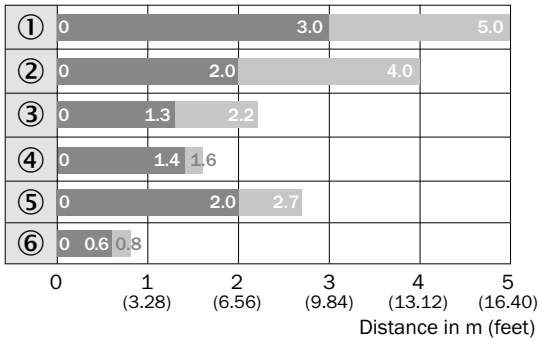

① PL80A
② PL40A
③ PL20A
④ PL10F
⑤ P250 CHEM
⑥ REF-IRF-56

F

Connection diagram

Cd-083

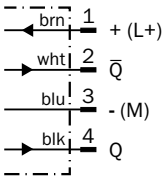

Cd-092

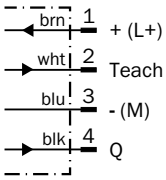

Cd-093

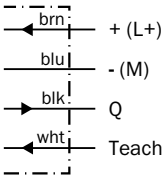

Cd-094

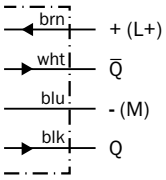

Cd-107

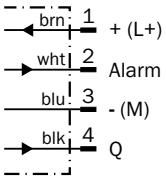

Recommended accessories

Plug connectors and cables

Connecting cable (female connector-open), hygienic systems

- **Cable material:** PP
- **Connector material:** PP

Figure	Connection type head A	Connection type head B	Connecting cable	Enclosure rating	Model name	Part no.
	Female connector, M8, 4-pin, straight	Cable, open conductor heads	2 m, 4-wire	IP 67, IP 69K	DOL-0804-G02MN	6033670
			5 m, 4-wire	IP 67, IP 69K	DOL-0804-G05MN	6033671
	Female connector, M8, 4-pin, angled	Cable, open conductor heads	2 m, 4-wire	IP 67, IP 69K	DOL-0804-W02MN	6033673
			5 m, 4-wire	IP 67, IP 69K	DOL-0804-W05MN	6033674

Universal bar clamp systems

- **For product family:** Hygienic Design BeftecHD for sensors with D12 adapter shaft

Figure	Material	Description	Model name	Part no.
	Hygienic Design, Stainless steel V4A (1.4404, 316L), Silicone (seal)	Hygienic design mounting tube with bayonet lock, 14.4 mm x 85.5 mm x 14.4 mm	BEF-HDSBR	4074403
		Hygienic design flange with seal, 40 mm x 12 mm x 40 mm	BEF-HDSF	4072880
		Hygienic design telescopic tube, straight, with bayonet lock without flange, 23 mm x 153 mm x 23 mm	BEF-HDSTRG	2067780
		Hygienic design telescopic tube, straight, with bayonet lock with flange, 40 mm x 165 mm x 40 mm	BEF-HDSTRGF	2067779
		Hygienic design telescopic tube, angled, with bayonet lock without flange, 23 mm x 125 mm x 73 mm	BEF-HDSTRW	2067778
		Hygienic design telescopic tube, angled, with bayonet lock with flange, 40 mm x 125 mm x 76 mm	BEF-HDSTRWF	2067777

Reflectors

Angular

Figure	Material	Description	Model name	Part no.
	Plastic	Chemically resistant, screw connection, 47 mm x 47 mm	P250 CHEM	5321097
	PMMA/ABS	Rectangular, screw connection, 80 mm x 80 mm	PL80A	1003865

F

Fine triple reflectors

Figure	Material	Description	Model name	Part no.
	Plastic	Fine triple, chemically resistant, screw connection, 18 mm x 18 mm	PL10F CHEM	5321636
		Fine triple, chemically resistant, screw connection, suitable for laser sensors, 16 mm x 38 mm	PL20F-CHEM	5326089

Reflective tape

Figure	Description	Model name	Part no.
	Self-adhesive, 50 mm x 60 mm	REF-IRF-56	5314244

Special reflectors

Figure	Material	Description	Model name	Part no.
	Plastic	Chemically resistant, screw connection, 38 mm x 15 mm	PL20 CHEM	5321089
	PMMA/ABS	Antifog, for prevention of moisture fogging on the reflection area, screw connection, 56 mm x 37 mm	PL40A Antifog	5322011
	Plastic	Rectangular, screw connection M3, countersunk screw head, chemical resistent, 56 mm x 37 mm	PL40B-CHEM	5326088
	Stainless steel V4A (1.4404, 316L)	Stainless steel reflector, hygienic design, chemically resistant, Enclosure rating IP 69K, D12-adapter shaft, 25 mm x 25 mm	PLH25-D12	2063404
		Stainless steel reflector, hygienic design, chemically resistant, Enclosure rating IP 69K, M12-adapter thread, 25 mm x 25 mm	PLH25-M12	2063403
		Stainless steel reflector, wash-down design, chemically resistant, Enclosure rating IP 69K, screw connection, 14 mm x 14 mm	PLV14-A	2063405

→ **For additional accessories, please see page L-861**

F

F

The new standard for optical and mechanical ruggedness

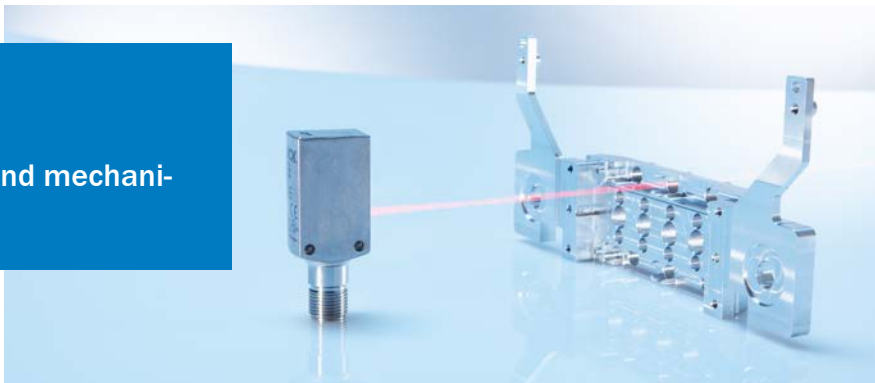

F

Product description

For the best possible performance in a wet environment: thanks to high light immunity, the new W4SL-3 Inox miniature photoelectric sensors from SICK with precise laser light spot set new standards when it comes to preventing undesired background reflections and to ambient light immunity, even in modern energy-saving lights. The combination of SICK's latest proprietary laser and SIRIC® technologies reduces incorrect switching. The photoelectric sensors complete this product family. One device can reliably detect all transparent objects as well as tiny non-transparent objects. This reduces the variety of devices and saves on storage costs. The photoelectric sensors also feature an IO-Link function, so that initial system performance diagnostics can be done independently. The W4SL-3 Inox is certified in accordance with ECOLAB. The membrane teach-in pushbutton and the pin-cast electrical connections make it reliable even in critical ambient conditions.

At a glance

- Precise laser light spot, laser class 1
- Stainless steel housing with washdown design
- Latest SIRIC® and laser technologies for outstanding background suppression and ambient light immunity
- Teach-in pushbutton can be switched between detection of transparent and tiny non-transparent objects
- ECOLAB certified, tested to IP 66, IP 67, IP 68 and IP 69K enclosure rating
- IO-Link (optional)

Your benefits

- Precise laser light spot for highly accurate switching
- Washable stainless steel housing reduces bacterial contamination
- Innovative washdown design with sealed connections and unique patented membrane teach-in pushbutton
- High ambient light immunity reduces incorrect switching and ultimately machine downtime, even when modern energy-saving lights are used
- The highest degree of machine design flexibility. Outstanding BGS (background suppression) eliminates the effect of undesired background reflections. Autocollimation permits detection through very small drilled holes.
- IO-Link provides effortless initial diagnostics of system performance

Additional information

→ **www.mysick.com/en/W4SL-3V**
For more information, just enter the link or scan the QR code and get direct access to technical data, CAD design models, operating instructions, software, application examples and much more.

Detailed technical data

Features

	WTB4SL-3V	WSE4SL-3V
Sensor principle	Photoelectric proximity sensor	Through-beam photoelectric sensor
Detection principle	Background suppression	–
Dimensions (W x H x D)	15.3 mm x 55.4 mm x 22.2 mm	
Housing design	Washdown	
Housing design (light emission)	Rectangular, Slim	
Mounting hole	M3	
Sensing range max.	25 mm ... 300 mm [1]	0 m ... 60 m
Sensing range	25 mm ... 300 mm [1]	0 m ... 50 m
Type of light	Visible red light	
Light source [2]	Laser	
Light spot size (distance)	Ø 1 mm (170 mm)	Ø 1 mm (500 mm)
Wave length	650 nm	
Laser class [3]	1	
Adjustment	Single teach-in button	

[1] Object with 90 % reflectance (referred to standard white, DIN 5033)
[2] Average service life 50,000 h at T_A = +25 °C.
[3] EN60825-1:2008-05 & IEC 60825-1:2007-03 / CDRH 21 CFR 1040.10 & 1040.11

F

Mechanics/electronics

	WTB4SL-3V	WSE4SL-3V
Supply voltage [1]	10 V DC ... 30 V DC	
Ripple [2]	< 5 V_{pp}	
Power consumption [3]	≤ 30 mA	
Output type	PNP [4] / NPN [4] (depending on type)	
Output function	Complementary	
Switching mode [4]	Light/dark-switching	
Output current $I_{max.}$	≤ 100 mA	
Response time [5]	≤ 0.5 ms	
Switching frequency [6]	1,000 Hz	
Connection type	Male connector, M8 [7] / Male connector, M12 [9] / Cable, 2 m [8] (depending on type)	
Circuit protection	A [10], B [11], C [12]	
Protection class	III	
Weight		
Cable [8]	80 g	
Connector M8 [7]	40 g	
Connector M12 [9]	45 g	
Housing material	Stainless steel V4A (1.4404, 316L)	
Optics material	PMMA	

	WTB4SL-3V	WSE4SL-3V
Enclosure rating	IP 66, IP 67, IP 68, IP 69K [13]	
Ambient operating temperature	–10 °C ... +50 °C	
Ambient operating temperature extended [14] [15]	–30 °C ... +55 °C	
Ambient storage temperature	–30 °C ... +70 °C	

[1] Limit values, operation in short-circuit protected network max. 8 A.
[2] May not exceed or fall short of V_S tolerances.
[3] Without load.
[4] Q = light-switching.
[5] Signal transit time with resistive load.
[6] With light/dark ratio 1:1.
[7] Tightening torque, max.: 0.6 Nm.
[8] Do not bend below 0 °C.
[9] Tightening torque, max.: 0.7 Nm.
[10] A = V_S connections reverse-polarity protected.
[11] B = inputs and output reverse-polarity protected.
[12] C = interference suppression.
[13] Only in case of correctly mounted IP 69K connecting cable.
[14] As of T_a = 50 °C, a max. supply voltage $V_{max.}$ = 24 V and a max. load current $I_{max.}$ = 50 mA is permitted.
[15] Using the sensor below T_a = –10 °C is possible, if the sensor is turned on at T_a > –10 °C, then the environment cools down and the sensor is not disconnected from the supply voltage during the whole time. It is not allowed to turn on the sensor below T_a = –10 °C.

Ordering information

F

Other models available at www.mysick.com/en/W4SL-3V

WTB4SL-3V

- **Sensor principle:** photoelectric proximity sensor
- **Switching mode:** light/dark-switching (Q = light-switching.)
- **Adjustment:** single teach-in button

Sensing range max. [1]	Output type	Connection	Connection diagram	Model name	Part no.
25 mm ... 300 mm	PNP	Connector M8, 4-pin	Cd-083	WTB4SL-3P2262V	1058251
		Connector M12, 4-pin	Cd-083	WTB4SL-3P2462V	1058253
		Cable, 4-wire, 2 m, PVC	Cd-094	WTB4SL-3P1162V	1058256
	NPN	Connector M8, 4-pin	Cd-083	WTB4SL-3N2262V	1058252
		Connector M12, 4-pin	Cd-083	WTB4SL-3N2462V	1058254
		Cable, 4-wire, 2 m, PVC	Cd-094	WTB4SL-3N1162V	1058257

[1] Object with 90 % reflectance (referred to standard white, DIN 5033)

WSE4SL-3V

- **Sensor principle:** through-beam photoelectric sensor
- **Switching mode:** light/dark-switching (Q = light-switching.)
- **Adjustment:** single teach-in button

Sensing range max.	Output type	Connection	Connection diagram	Model name	Part no.
0 m ... 60 m	PNP	Connector M8, 4-pin	Cd-232	WSE4SL-3P2237V	1058267
		Connector M12, 4-pin	Cd-232	WSE4SL-3P2437V	1058269
	NPN	Cable, 4-wire, 2 m, PVC	Cd-231	WSE4SL-3N1137V	1058270

Dimensional drawings

Dimensions in mm (inch)

WTB4SL-3

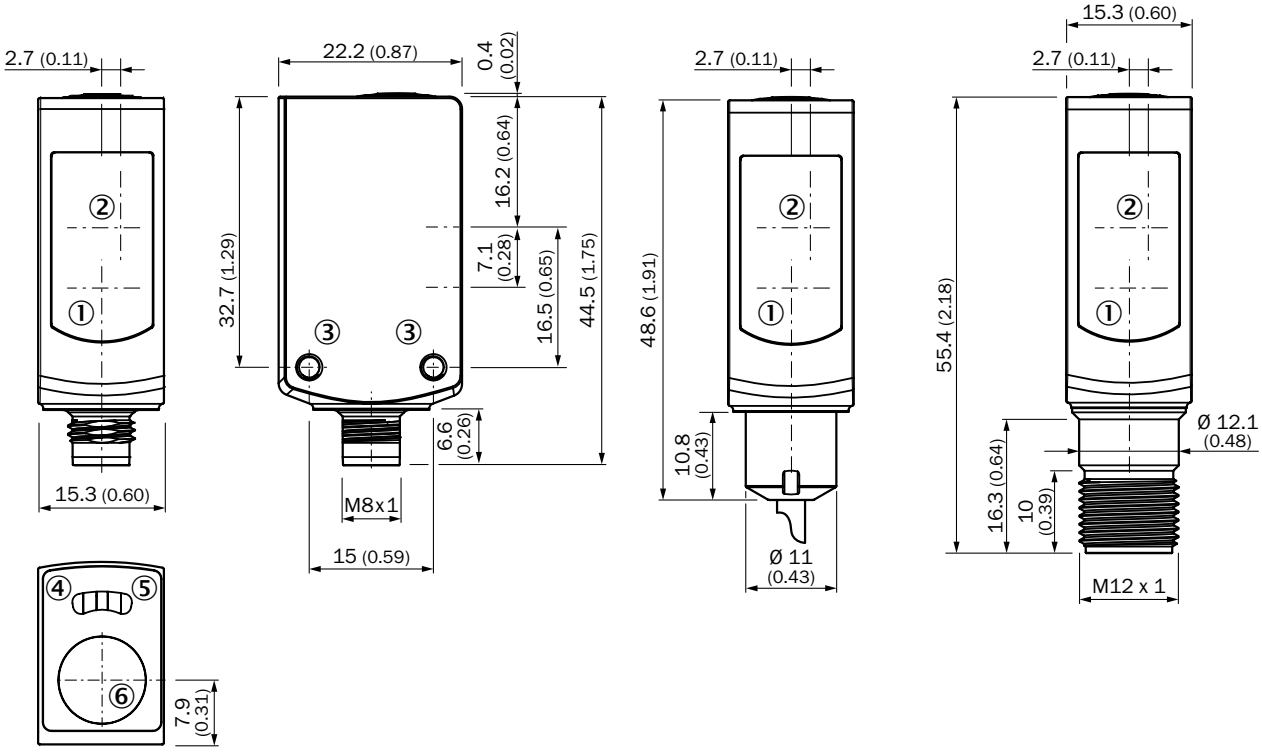

① Center of optical axis, sender
② Center of optical axis, receiver
③ Threaded mounting hole M3
④ Status indicator LED, yellow: Status of received light beam
⑤ Status indicator LED green: power on
⑥ Single teach-in button

WSE4SL-3

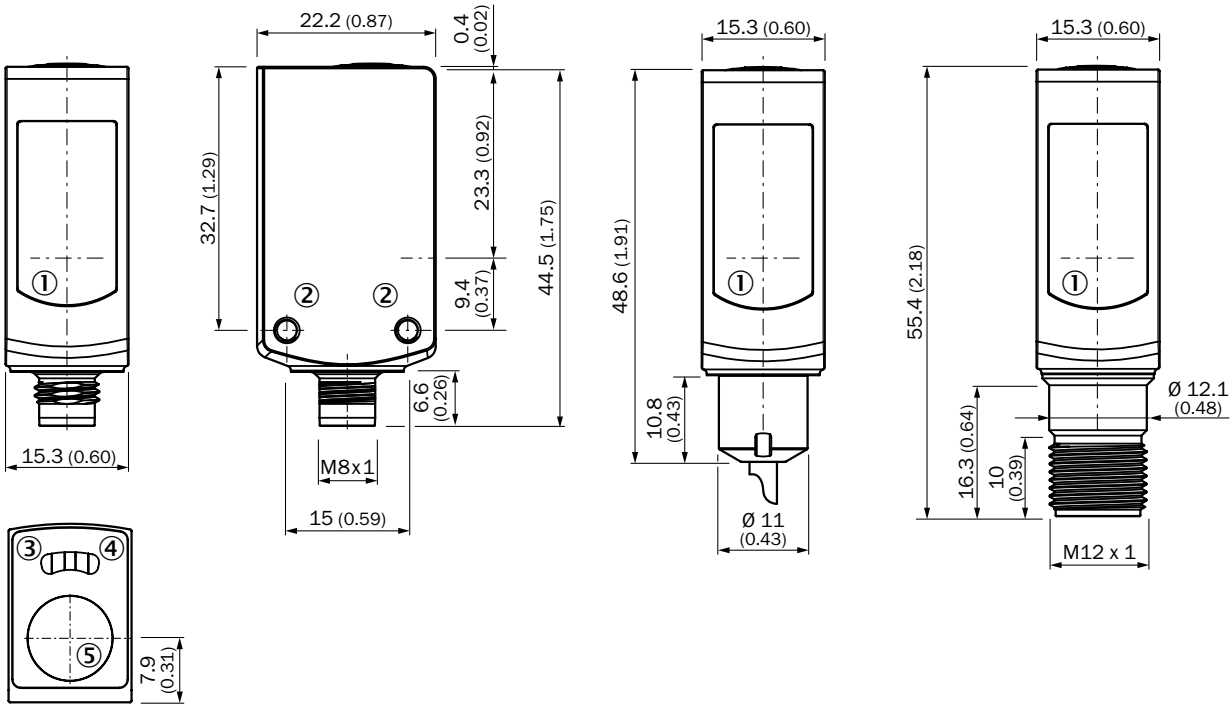

① Center of optical axis
② Threaded mounting hole M3
③ Status indicator LED, yellow: Status of received light beam
④ Status indicator LED green: power on
⑤ Single teach-in button

F

Characteristic curves

Black-white shift

WTB4SL-3

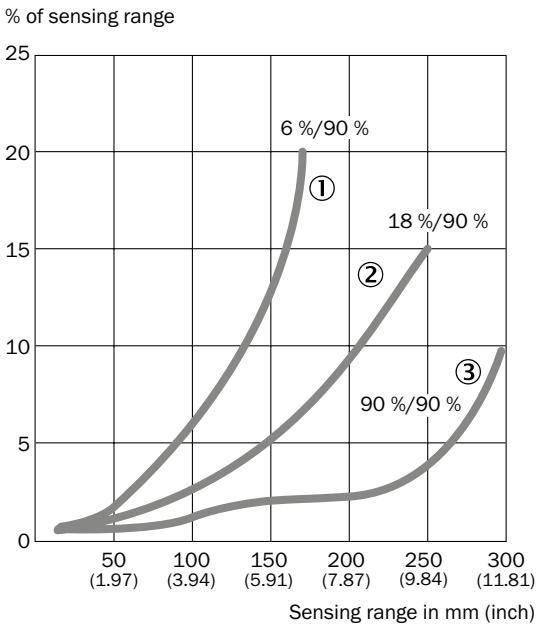

Operating reserve

WSE4SL-3

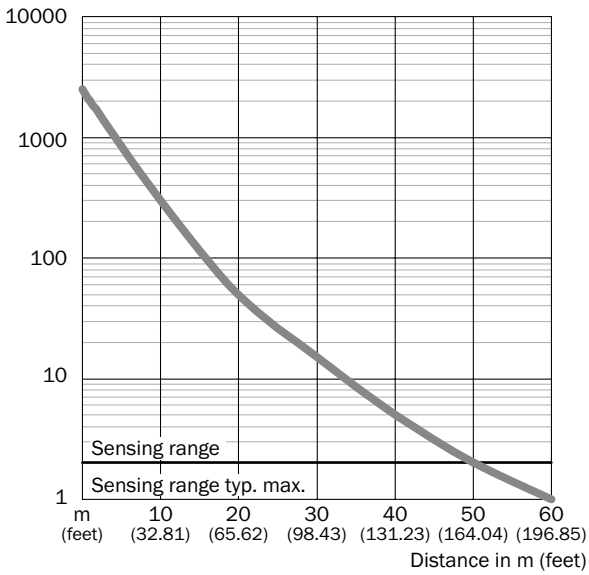

F

① Sensing range on black, 6 % remission
② Sensing range on gray, 18 % remission
③ Sensing range on white, 90 % remission

Bar diagrams

WTB4SL-3

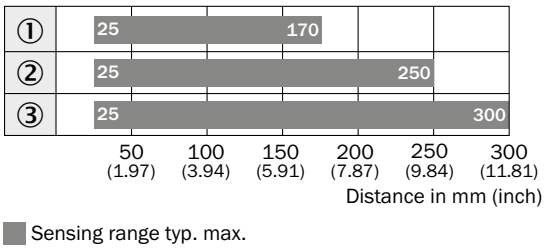

Sensing range typ. max.

① Sensing range on black, 6 % remission
② Sensing range on gray, 18 % remission
③ Sensing range on white, 90 % remission

WSE4SL-3

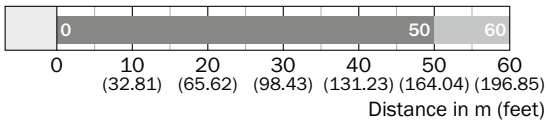

Sensing range Sensing range typ. max.

Light spot diameter

WTB4SL-3

Radius in mm (inch)

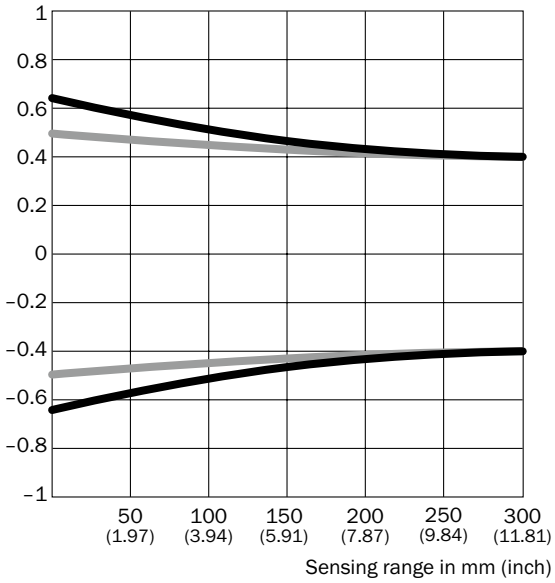

Dimensions in mm (inch)

Sensing range	Vertical	Horizontal
50 mm (1.97)	1.2 (0.05)	1.0 (0.04)
100 mm (3.94)	1.1 (0.04)	1.0 (0.04)
200 mm (7.87)	0.9 (0.04)	0.9 (0.04)
300 mm (11.81)	0.8 (0.03)	0.8 (0.03)

Vertical
Horizontal

WSE4SL-3

Radius in mm (inch)

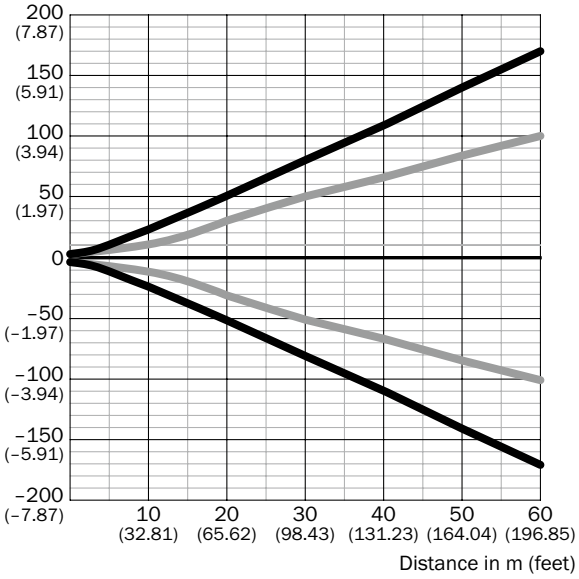

Dimensions in mm (inch)

Sensing range	Vertical	Horizontal
0.5 m (1.64 feet)	< 1.0 (0.04)	< 1.0 (0.04)
1 m (3.28 feet)	1.5 (0.06)	1.2 (0.05)
5 m (16.40 feet)	15 (0.59)	11 (0.43)
10 m (32.81 feet)	45 (1.77)	28 (1.10)
60 m (196.85 feet)	336 (13.23)	200 (7.87)

Vertical
Horizontal

F

WSE4SL-3, close up, near range

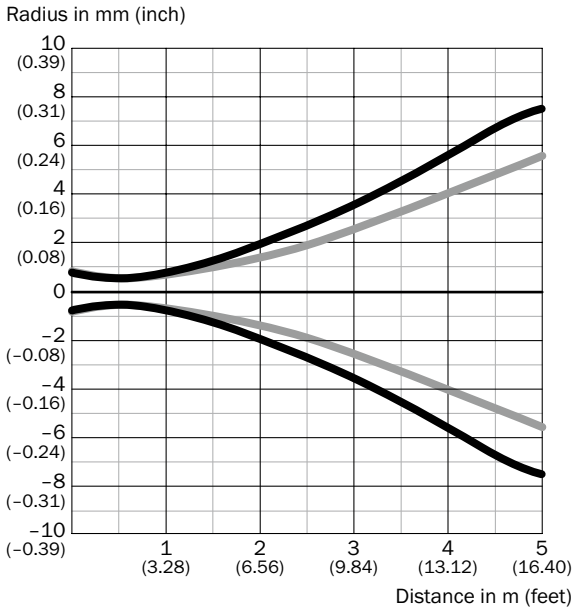

Vertical
Horizontal

F

Connection diagram

Cd-083

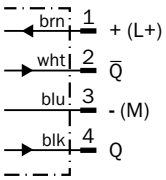

Cd-094

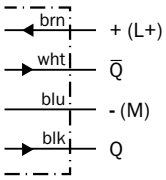

Cd-231

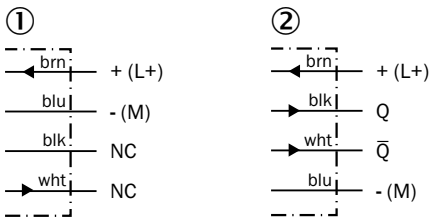

① Sender
② Receiver

Cd-232

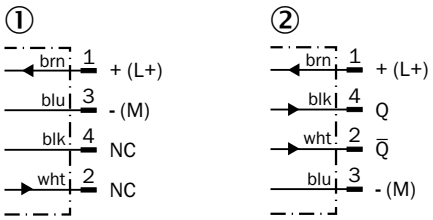

① Sender
② Receiver

Recommended accessories

Plug connectors and cables

Connecting cable (female connector-open), PVC, hygienic systems

- **Cable material:** PVC
- **Connector material:** PVC

Figure	Connection type head A	Connection type head B	Connecting cable	Enclosure rating	Model name	Part no.
	Female connector, M8, 4-pin, straight	Cable, open conductor heads	2 m, 4-wire	IP 67, IP 69K	DOL-0804-G02MN	6033670
			5 m, 4-wire	IP 67, IP 69K	DOL-0804-G05MN	6033671
	Female connector, M8, 4-pin, angled	Cable, open conductor heads	2 m, 4-wire	IP 67, IP 69K	DOL-0804-W02MN	6033673
			5 m, 4-wire	IP 67, IP 69K	DOL-0804-W05MN	6033674
	Female connector, M12, 4-pin, straight	Cable, open conductor heads	2 m, 4-wire	IP 67, IP 69K	DOL-1204-G02MN	6028128
			5 m, 4-wire	IP 67, IP 69K	DOL-1204-G05MN	6028130
	Female connector, M12, 4-pin, angled	Cable, open conductor heads	2 m, 4-wire	IP 67, IP 69K	DOL-1204-W02MN	6028129
			5 m, 4-wire	IP 67, IP 69K	DOL-1204-W05MN	6028131

Universal bar clamp systems

Figure	Material	Description	Model name	Part no.
	Stainless steel 1.4571 (sheet), Stainless steel 1.4408 (clamp)	Plate N02N for universal clamp bracket	BEF-KHS-N02N	2051618

→ **For additional accessories, please see page L-861**

F

Detect all transparent objects with one device – Change mode via teach button

STAIN-LESS STEEL | IP 69K | IO-Link | SIRIC®

F

Product description

A single press of a button on the WL4SLG-3 Inox allows operation in the detection mode for transparent and/or non-transparent objects. This means that one device can be used to detect transparent vials and PET bottles, but also metallic needles and wires, for example. The precise, highly visible laser light spot with sharp contour ensures a high level of detection quality and facilitates alignment. Autocollimation technology ensures that the sensor reliably detects objects at close range as well as through narrow gaps or small drilled holes. The photoelectric sensors also feature an IO-Link function, so that initial system performance diagnostics can be done independently. Furthermore, IO-Link permits the integration of additional functions such as meters or profile recognition directly into the sensor. There is no need for complex control programming.

At a glance

- Precise laser light spot, laser class 1, no blind spots
- Stainless steel housing with washdown design
- Latest SIRIC® and laser technologies for very good background suppression and ambient light immunity
- ECOLAB certified, tested to IP66, IP67, IP68 and IP69K enclosure rating
- Teach-in pushbutton can be switched between detection of transparent and tiny non-transparent objects
- IO-Link (optional)

Your benefits

- Precise laser light spot for highly accurate switching
- Washable stainless steel housing reduces bacterial contamination
- Innovative washdown design with sealed connections and unique patented membrane teach-in pushbutton
- High ambient light immunity reduces incorrect switching and ultimately machine downtime, even when modern energy-saving lights are used
- The highest degree of machine design flexibility. Outstanding BGS (background suppression) eliminates the effect of undesired background reflections. Autocollimation permits detection through very small drilled holes.
- IO-Link provides effortless initial diagnostics of system performance

→ **www.mysick.com/en/W4SLG-3V**

For more information, just enter the link or scan the QR code and get direct access to technical data, CAD design models, operating instructions, software, application examples and much more.

Additional information

Detailed technical data

Features

Sensor principle	Photoelectric retro-reflective sensor
Detection principle	Autocollimation
Dimensions (W x H x D)	15.3 mm x 55.4 mm x 22.2 mm
Housing design	Washdown
Housing design (light emission)	Rectangular, Slim
Mounting hole	M3
Sensing range max. [1]	0 m ... 4.5 m
Sensing range [1]	0 m ... 2 m
Type of light	Visible red light
Light source [2]	Laser
Light spot size (distance)	Ø 1 mm (500 mm)
Wave length	650 nm
Laser class [3]	1
Adjustment	Single teach-in button / Cable, Single teach-in button [4] (depending on type)
Special feature	Detection of transparent objects

[1] REF-AC1000.
[2] Average service life 50,000 h at T_A = +25 °C.
[3] EN60825-1:2008-05 & IEC 60825-1:2007-03 / CDRH 21 CFR 1040.10 & 1040.11.
[4] Adjustment via cable (ET): white cable or PIN2 according to the desired sensitivity > 2 ... < 8 s or put > 8 s on L+ (PNP) or on M (NPN)

F

Mechanics/electronics

Supply voltage [1]	10 V DC ... 30 V DC
Ripple [2]	< 5 V_{pp}
Power consumption [3]	≤ 30 mA
Output type	PNP [4] [5]
Output function	Complementary
Switching mode	Light/dark-switching [4] [5]
Output current $I_{max.}$	≤ 100 mA
Response time [6]	≤ 0.5 ms
Switching frequency [7]	1,000 Hz
Connection type	Male connector, M8 [8] / Male connector, M12 [9] / Cable, 2 m [10] (depending on type)
Circuit protection	A [11], B [12], C [13]
Protection class	III
Weight	
Cable [10]	80 g
Connector M8 [8]	40 g
Connector M12 [9]	45 g
Polarisation filter	✔
Housing material	Stainless steel V4A (1.4404, 316L)
Optics material	PMMA

Enclosure rating	IP 66, IP 67, IP 68, IP 69K [14]
Ambient operating temperature	–10 °C ... +50 °C
Ambient operating temperature extended [15] [16]	–30 °C ... +55 °C
Ambient storage temperature	–30 °C ... +70 °C

[1] Limit values, operation in short-circuit protected network max. 8 A.
[2] May not exceed or fall short of V_S tolerances.
[3] Without load.
[4] Q = light-switching.
[5] Q = dark-switching.
[6] Signal transit time with resistive load.
[7] With light/dark ratio 1:1.
[8] Tightening torque, max.: 0.6 Nm.
[9] Tightening torque, max.: 0.7 Nm.
[10] Do not bend below 0 °C.
[11] A = V_S connections reverse-polarity protected.
[12] B = inputs and output reverse-polarity protected.
[13] C = interference suppression.
[14] Only in case of correctly mounted IP 69K connecting cable.
[15] As of T_a = 50 °C, a max. supply voltage $V_{max.}$ = 24 V and a max. load current $I_{max.}$ = 50 mA is permitted.
[16] Using the sensor below T_a = –10 °C is possible, if the sensor is turned on at T_a > –10 °C, then the environment cools down and the sensor is not disconnected from the supply voltage during the whole time. It is not allowed to turn on the sensor below T_a = –10 °C.

Ordering information

Other models available at www.mysick.com/en/W4SLG-3V

F

WL4SLG-3V

- **Sensor principle:** photoelectric retro-reflective sensor
- **Output type:** PNP

Sensing range max. [1]	Switching mode	Adjustment	Connection	Connection diagram	Model name	Part no.
0 m ... 4.5 m	Light/dark-switching [2]	Single teach-in button	Connector M8, 4-pin	Cd-083	WL4SLG-3P2232V	1058258
			Connector M12, 4-pin	Cd-083	WL4SLG-3P2432V	1058261
			Cable, 4-wire, 2 m, PVC	Cd-094	WL4SLG-3P1132V	1058266
	Light/dark-switching [3]	Cable, Single teach-in button [4]	Connector M8, 4-pin	Cd-195	WL4SLG-3F2234V	1058260
			Connector M12, 4-pin	Cd-195	WL4SLG-3F2434V	1058263

[1] REF-AC1000.
[2] Q = light-switching.
[3] Q = dark-switching.
[4] Adjustment via cable (ET): white cable or PIN2 according to the desired sensitivity > 2 ... < 8 s or put > 8 s on L+ (PNP) or on M (NPN)

WL4SLG-3V, IO-Link

- **Sensor principle:** photoelectric retro-reflective sensor
- **Output type:** PNP
- **IO-Link:** standard functions

Sensing range max. [1]	Switching mode [2]	Adjustment	Connection	Connection diagram	Model name	Part no.
0 m ... 4.5 m	Light/dark-switching	Single teach-in button	Connector M12, 4-pin	Cd-083	WL4SLGC-3P2432V	1058262

[1] REF-AC1000.
[2] Q = light-switching.

Dimensional drawings

Dimensions in mm (inch)

WL4SLG-3V

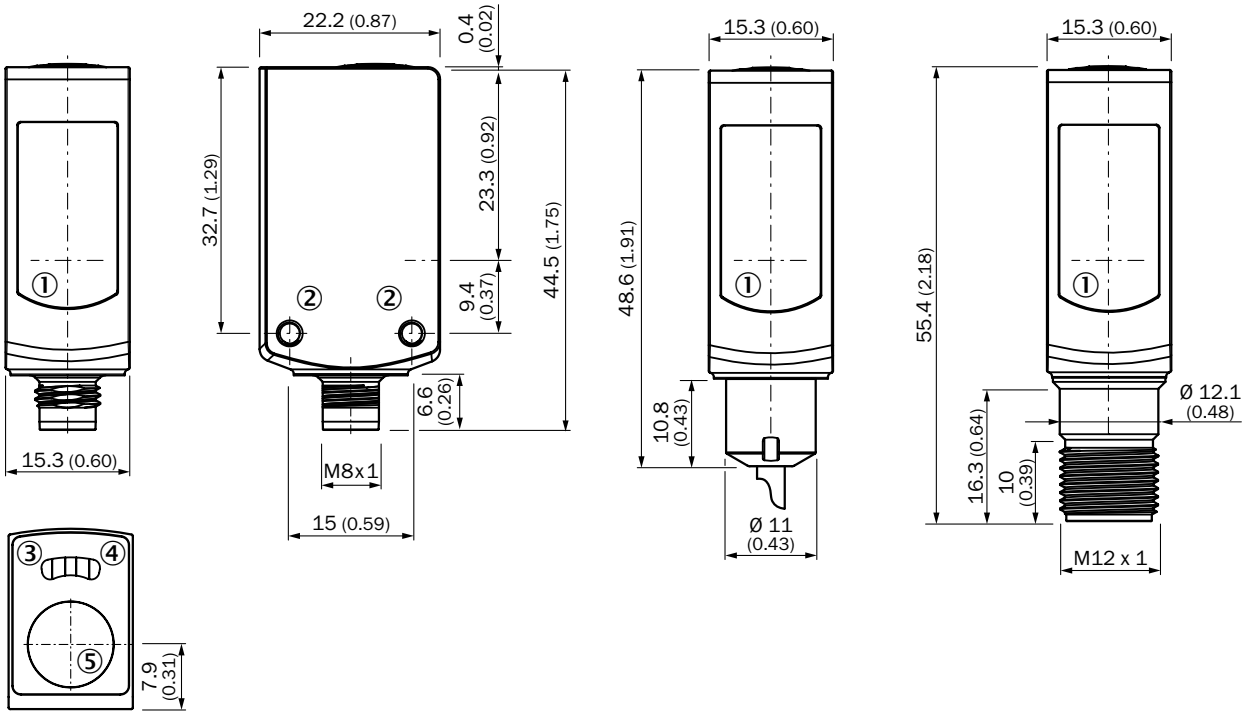

① Center of optical axis
② Threaded mounting hole M3
③ Status indicator LED, yellow: Status of received light beam
④ Status indicator LED green: power on
⑤ Single teach-in button

Characteristic curves

Operating reserve

WL4SLG-3

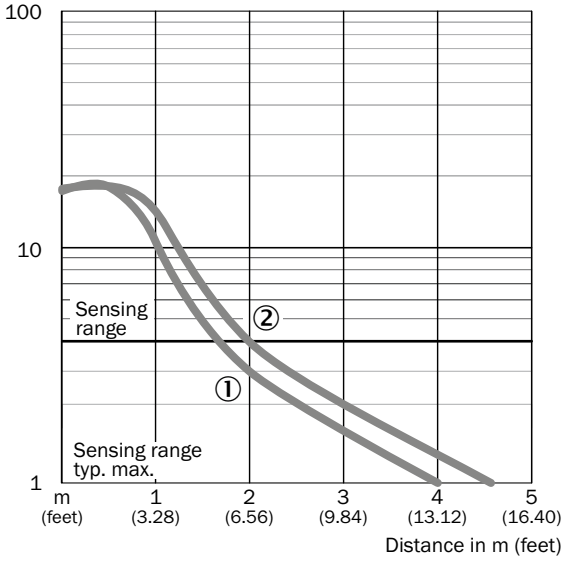

① PLV14-A / PLH25-M12 / PLH25-D12
② P41F / REF-AC1000

Bar diagrams

WL4SLG-3

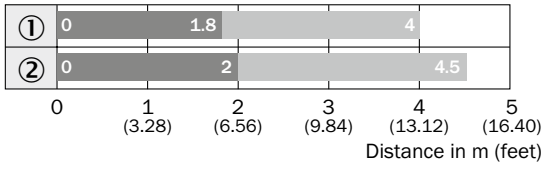

① PLV14-A / PLH25-M12 / PLH25-D12
② P41F / REF-AC1000

F

Light spot diameter

WL4SLG-3, overview

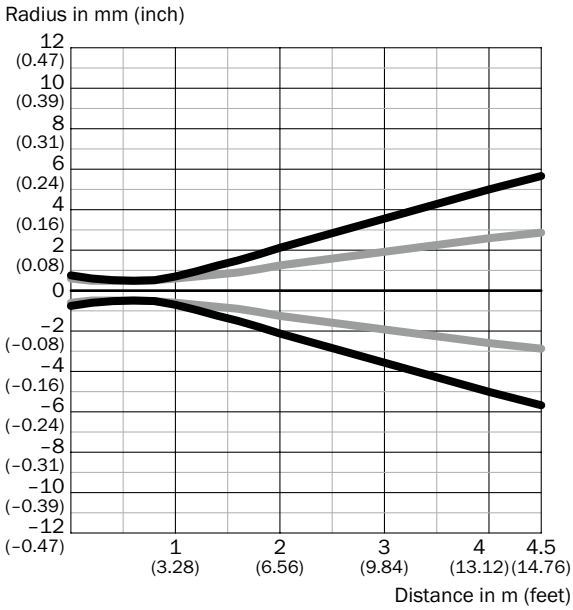

Dimensions in mm (inch)

Sensing range	Vertical	Horizontal
0.5 m (1.64 feet)	< 1.0 (0.04)	< 1.0 (0.04)
1 m (3.28 feet)	1.5 (0.06)	1.2 (0.05)
2 m (6.56 feet)	4.3 (0.17)	2.6 (0.10)
4.5 m (14.76 feet)	11.3 (0.44)	5.6 (0.22)

Vertical
Horizontal

WL4SLG-3, detailed view

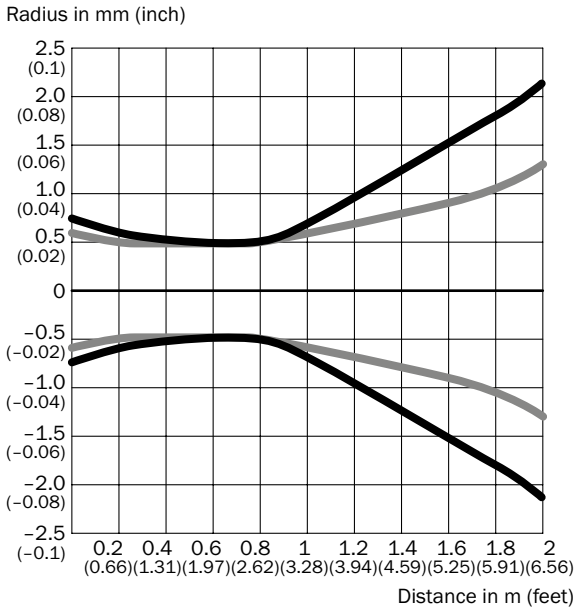

Vertical
Horizontal

F

Connection diagram

Cd-083

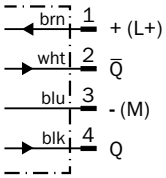

Cd-094

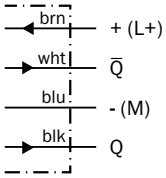

Cd-195

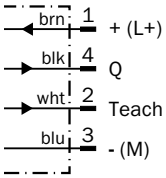

Recommended accessories

Plug connectors and cables

Connecting cable (female connector-open), PVC, hygienic systems

- **Cable material:** PVC
- **Connector material:** PVC

Figure	Connection type head A	Connection type head B	Connecting cable	Enclosure rating	Model name	Part no.
	Female connector, M8, 4-pin, straight	Cable, open conductor heads	2 m, 4-wire	IP 67, IP 69K	DOL-0804-G02MN	6033670
			5 m, 4-wire	IP 67, IP 69K	DOL-0804-G05MN	6033671
	Female connector, M8, 4-pin, angled	Cable, open conductor heads	2 m, 4-wire	IP 67, IP 69K	DOL-0804-W02MN	6033673
			5 m, 4-wire	IP 67, IP 69K	DOL-0804-W05MN	6033674
	Female connector, M12, 4-pin, straight	Cable, open conductor heads	2 m, 4-wire	IP 67, IP 69K	DOL-1204-G02MN	6028128
			5 m, 4-wire	IP 67, IP 69K	DOL-1204-G05MN	6028130
	Female connector, M12, 4-pin, angled	Cable, open conductor heads	2 m, 4-wire	IP 67, IP 69K	DOL-1204-W02MN	6028129
			5 m, 4-wire	IP 67, IP 69K	DOL-1204-W05MN	6028131

Universal bar clamp systems

Figure	Material	Description	Model name	Part no.
	Stainless steel 1.4571 (sheet), Stainless steel 1.4408 (clamp)	Plate N02N for universal clamp bracket	BEF-KHS-N02N	2051618

Reflectors

Angular

Figure	Material	Description	Model name	Part no.
	Plastic	Chemically resistant, screw connection, 47 mm x 47 mm	P250 CHEM	5321097
	PMMA/ABS	Rectangular, screw connection, 80 mm x 80 mm	PL80A	1003865

F

Fine triple reflectors

Figure	Material	Description	Model name	Part no.
	PMMA/ABS	Fine triple, screw connection, suitable for laser sensors, 47 mm x 47 mm	P250F	5308843
		Fine triple, screw connection, suitable for laser sensors, 18 mm x 18 mm	PL10F	5311210
	Plastic	Fine triple, chemically resistant, screw connection, 18 mm x 18 mm	PL10F CHEM	5321636
	PMMA/ABS	Fine triple, screw connection, suitable for laser sensors, 38 mm x 16 mm	PL20F	5308844
	Plastic	Fine triple, chemically resistant, screw connection, suitable for laser sensors, 16 mm x 38 mm	PL20F-CHEM	5326089
	PMMA/ABS	Fine triple, screw connection, suitable for laser sensors, 56 mm x 28 mm	PL30F	5326523
		Fine triple, screw connection, suitable for laser sensors, 76 mm x 45 mm	PL81-1F	5325060

F

Reflective tape

Figure	Description	Model name	Part no.
	Suitable for laser sensors, self-adhesive, cut, see alignment note, 56.3 mm x 56.3 mm	REF-AC1000-56	4063030

Special reflectors

Figure	Material	Description	Model name	Part no.
	Stainless steel V4A (1.4404, 316L)	Stainless steel reflector, hygienic design, chemically resistant, Enclosure rating IP 69K, D12-adapter shaft, 25 mm x 25 mm	PLH25-D12	2063404
		Stainless steel reflector, hygienic design, chemically resistant, Enclosure rating IP 69K, M12-adapter thread, 25 mm x 25 mm	PLH25-M12	2063403
		Stainless steel reflector, wash-down design, chemically resistant, Enclosure rating IP 69K, screw connection, 14 mm x 14 mm	PLV14-A	2063405

→ **For additional accessories, please see page L-861**

F

Laser technology and stainless steel hygienically combined

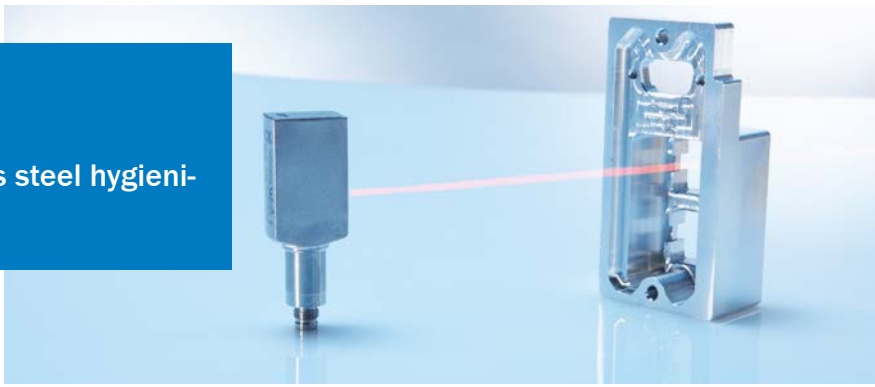

F

Product description

For the best possible hygienic performance: thanks to high immunity to ambient light, the new W4SL-3 Inox Hygiene miniature photoelectric sensors with precise laser light spot set new standards when it comes to preventing undesired background reflections and to ambient light immunity, even with modern energy-saving lights. The combination of SICK's latest proprietary laser and SIRIC® technologies reduces incorrect switching to minimize machine downtime. The photoelectric sensors complete this product family. One device can reliably detect all transparent objects as well as tiny non-transparent objects, thus reducing the variety of devices. The photoelectric sensors also feature an IO-Link function, so that initial system performance diagnostics can be done independently. The W4SL-3 Inox Hygiene is certified in accordance with ECOLAB. In addition to an innovative leak-tight design, the sensors also have an impressive smooth housing design, which follows current hygiene guidelines.

At a glance

- Precise laser light spot, laser class 1
- Stainless steel housing with wash down design
- Latest SIRIC® and laser technologies for outstanding background suppression and ambient light immunity
- Teach-in pushbutton can be switched between detection of transparent and tiny non-transparent objects
- ECOLAB certified, tested to IP 66, IP 67, IP 68 and IP 69K enclosure rating
- IO-Link (optional)

Your benefits

- Precise laser light spot for highly accurate switching
- Washable stainless steel housing reduces bacterial contamination
- Innovative wash down design with sealed connections and unique patented membrane teach-in pushbutton
- High ambient light immunity reduces incorrect switching and ultimately machine downtime, even when modern energy-saving lights are used
- The highest degree of machine design flexibility. Outstanding BGS (background suppression) eliminates the effect of undesired background reflections. Autocollimation permits detection through very small drilled holes.
- IO-Link provides effortless initial diagnostics of system performance

Additional information

→ **www.mysick.com/en/W4SL-3H**
For more information, just enter the link or scan the QR code and get direct access to technical data, CAD design models, operating instructions, software, application examples and much more.

Detailed technical data

Features

Sensor principle	Photoelectric proximity sensor
Detection principle	Background suppression
Dimensions (W x H x D)	15.3 mm x 63.2 mm x 22.2 mm
Housing design	Hygiene
Housing design (light emission)	Rectangular, Slim
Mounting hole	M3
Sensing range max. [1]	25 mm ... 300 mm
Sensing range [1]	25 mm ... 300 mm
Type of light	Visible red light
Light source [2]	Laser
Light spot size (distance)	Ø 1 mm (170 mm)
Wave length	650 nm
Laser class [3]	1
Adjustment	Single teach-in button

[1] Object with 90 % reflectance (referred to standard white, DIN 5033)
[2] Average service life 50,000 h at T_A = +25 °C.
[3] EN60825-1:2008-05 & IEC 60825-1:2007-03 / CDRH 21 CFR 1040.10 & 1040.11.

Mechanics/electronics

Supply voltage [1]	10 V DC ... 30 V DC
Ripple [2]	< 5 V_{pp}
Power consumption [3]	≤ 30 mA
Output type	PNP [4] / NPN [4] (depending on type)
Output function	Complementary
Switching mode [4]	Light/dark-switching
Output current $I_{max.}$	≤ 100 mA
Response time [5]	≤ 0.5 ms
Switching frequency [6]	± 1,000 Hz
Connection type	Male connector, M8 [7] / Cable, 2 m [8] (depending on type)
Mechanical connection	D12 adapter shaft
Circuit protection	A [9], B [10], C [11]
Protection class	III
Weight	
Connector M8 [7]	140 g
Cable [8]	180 g
Housing material	Stainless steel V4A (1.4404, 316L)
Optics material	PMMA

F

Enclosure rating	IP 66, IP 67, IP 68, IP 69K [12]
Ambient operating temperature	–10 °C ... +50 °C
Ambient operating temperature extended [13] [14]	–30 °C ... +55 °C
Ambient storage temperature	–30 °C ... +70 °C

[1] Limit values, operation in short-circuit protected network max. 8 A.
[2] May not exceed or fall short of V_S tolerances.
[3] Without load.
[4] Q = light-switching.
[5] Signal transit time with resistive load.
[6] With light/dark ratio 1:1.
[7] Tightening torque, max.: 0.6 Nm.
[8] Do not bend below 0 °C.
[9] A = V_S connections reverse-polarity protected.
[10] B = inputs and output reverse-polarity protected.
[11] C = interference suppression.
[12] Only in case of correctly mounted IP 69K connecting cable.
[13] As of T_a = 50 °C, a max. supply voltage $V_{max.}$ = 24 V and a max. load current $I_{max.}$ = 50 mA is permitted.
[14] Using the sensor below T_a = –10 °C is possible, if the sensor is turned on at T_a > –10 °C, then the environment cools down and the sensor is not disconnected from the supply voltage during the whole time. It is not allowed to turn on the sensor below T_a = –10 °C.

Ordering information

Other models available at www.mysick.com/en/W4SL-3H

WTB4SL-3H

- **Sensor principle:** photoelectric proximity sensor
- **Switching mode:** light/dark-switching (Q = light-switching.)
- **Adjustment:** single teach-in button

Sensing range max. [1]	Mechanical connection	Output type	Connection	Connection diagram	Model name	Part no.
25 mm ... 300 mm	D12 adapter shaft	PNP	Connector M8, 4-pin	Cd-094	WTB4SL-3P5262H	1058271
			Cable, 4-wire, 2 m, PVC	Cd-083	WTB4SL-3P4162H	1058274
		NPN	Cable, 4-wire, 2 m, PVC	Cd-083	WTB4SL-3N4162H	1058275

[1] Object with 90 % reflectance (referred to standard white, DIN 5033)

Dimensional drawings

Dimensions in mm (inch)

WTB4SL-3H, connector

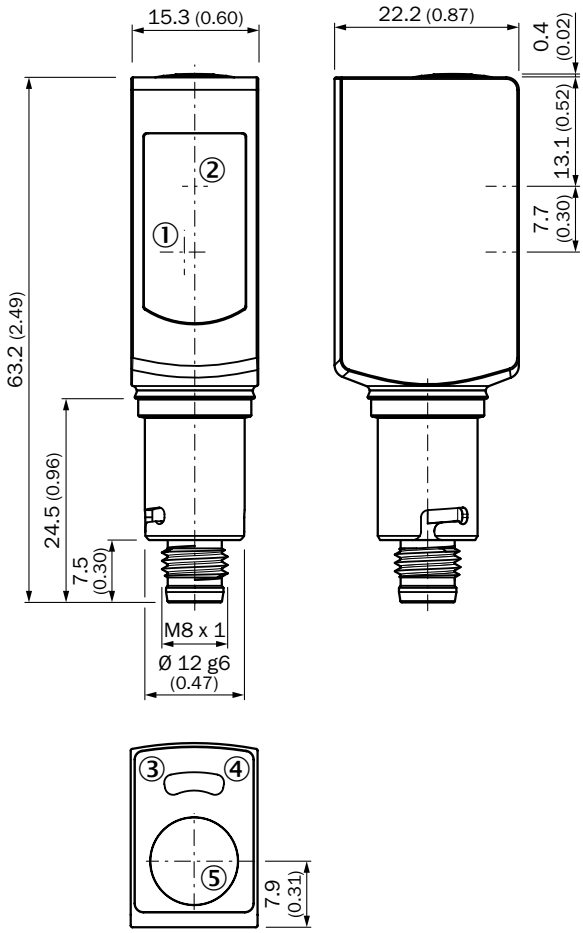

① Center of receiver's optical axis
② Center of optical axis, sender
③ Status indicator LED, yellow: Status of received light beam
④ Status indicator LED green: power on
⑤ Single teach-in button

WTB4SL-3H, cable

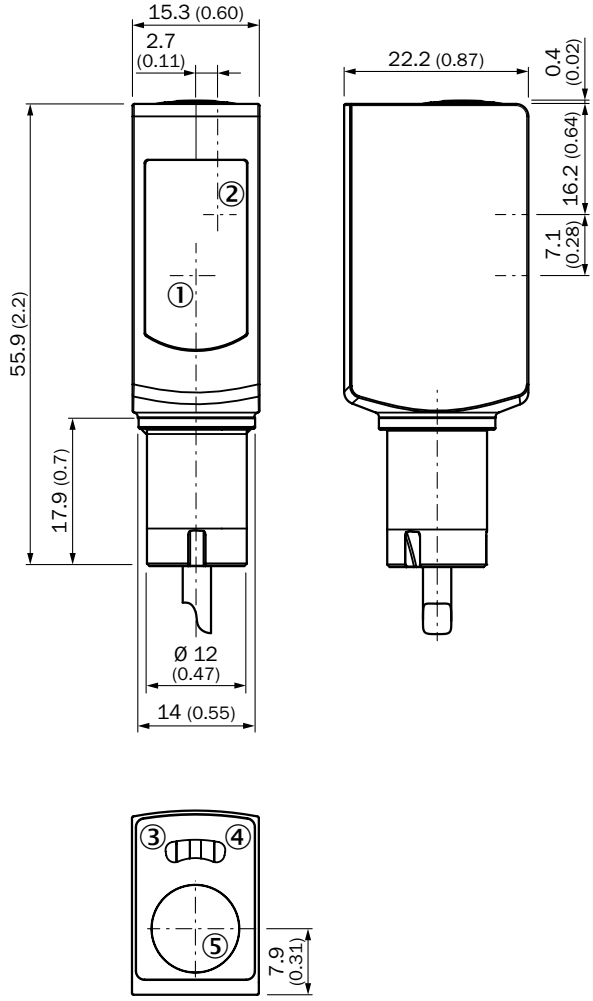

① Center of optical axis, sender
② Center of optical axis, receiver
③ Status indicator LED, yellow: Status of received light beam
④ Status indicator LED green: power on
⑤ Single teach-in button

F

Characteristic curves

Black-white shift

WTB4SL-3H

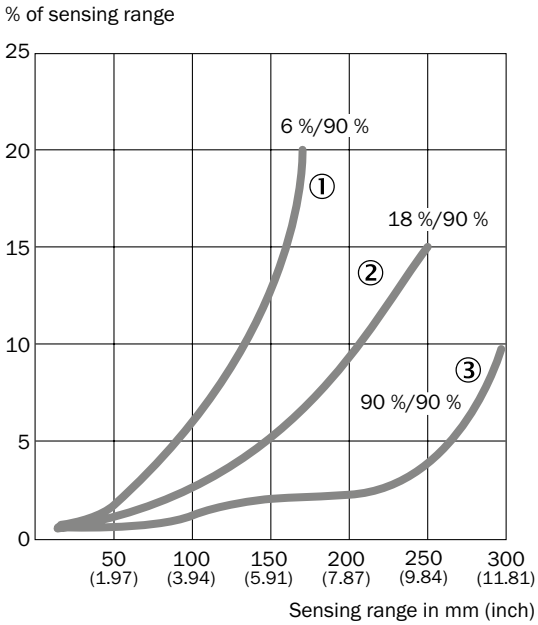

① Sensing range on black, 6 % remission
② Sensing range on gray, 18 % remission
③ Sensing range on white, 90 % remission

Bar diagrams

WTB4SL-3H

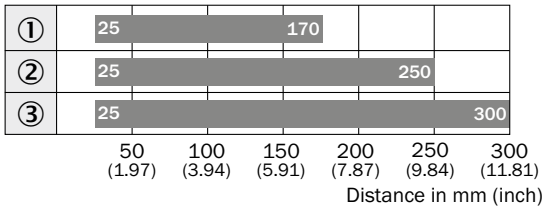

Sensing range typ. max.

① Sensing range on black, 6 % remission
② Sensing range on gray, 18 % remission
③ Sensing range on white, 90 % remission

Light spot diameter

WTB4SL-3H

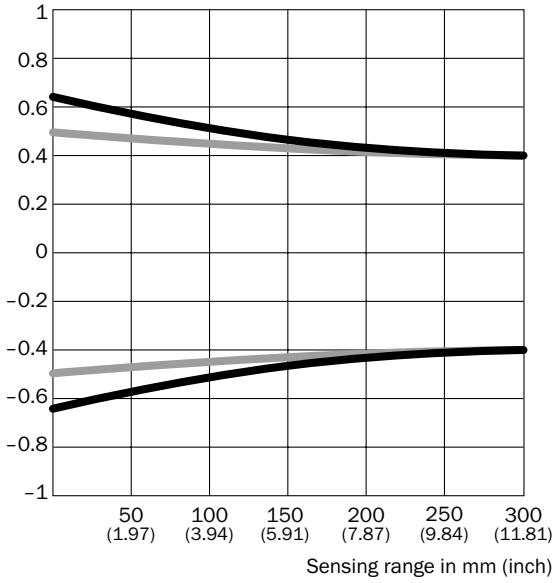

Dimensions in mm (inch)

Sensing range	Vertical	Horizontal
50 mm (1.97)	1.2 (0.05)	1.0 (0.04)
100 mm (3.94)	1.1 (0.04)	1.0 (0.04)
200 mm (7.87)	0.9 (0.04)	0.9 (0.04)
300 mm (11.81)	0.8 (0.03)	0.8 (0.03)

Connection diagram

Cd-083

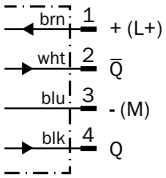

Cd-094

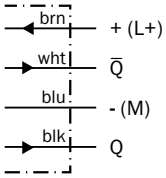

Recommended accessories

Plug connectors and cables

Connecting cable (female connector-open), PVC, hygienic systems

- **Cable material:** PVC
- **Connector material:** PVC

Figure	Connection type head A	Connection type head B	Connecting cable	Enclosure rating	Model name	Part no.
	Female connector, M8, 4-pin, straight	Cable, open conductor heads	2 m, 4-wire	IP 67, IP 69K	DOL-0804-G02MN	6033670
			5 m, 4-wire	IP 67, IP 69K	DOL-0804-G05MN	6033671
	Female connector, M8, 4-pin, angled	Cable, open conductor heads	2 m, 4-wire	IP 67, IP 69K	DOL-0804-W02MN	6033673
			5 m, 4-wire	IP 67, IP 69K	DOL-0804-W05MN	6033674

F

Universal bar clamp systems

- **For product family:** Hygienic Design BeftecHD for sensors with D12 adapter shaft

Figure	Material	Description	Model name	Part no.
	Hygienic Design, Stainless steel V4A (1.4404, 316L), Silicone (seal)	Hygienic design mounting tube with bayonet lock, 14.4 mm x 85.5 mm x 14.4 mm	BEF-HDSBR	4074403
		Hygienic design flange with seal, 40 mm x 12 mm x 40 mm	BEF-HDSF	4072880
		Hygienic design telescopic tube, straight, with bayonet lock without flange, 23 mm x 153 mm x 23 mm	BEF-HDSTRG	2067780
		Hygienic design telescopic tube, straight, with bayonet lock with flange, 40 mm x 165 mm x 40 mm	BEF-HDSTRGF	2067779
		Hygienic design telescopic tube, angled, with bayonet lock without flange, 23 mm x 125 mm x 73 mm	BEF-HDSTRW	2067778
		Hygienic design telescopic tube, angled, with bayonet lock with flange, 40 mm x 125 mm x 76 mm	BEF-HDSTRWF	2067777

→ **For additional accessories, please see page L-861**

F

Detect all transparent objects with one device – Change mode via teach button

STAIN-LESS STEEL | IP 69K | IO-Link | SIRIC®

Product description

The stainless steel housing of the WL4SLG-3 Inox Hygiene photoelectric retro-reflective sensor, which is designed based on hygienic guidelines, is especially suited to machines in which hygiene is already part of the design. A press of a button allows operation in the detection mode for transparent and/or non-transparent objects. This means that one device can be used to detect transparent vials and metallic needles, for example. This reduces the variety of sensors needed. The precise, highly visible laser light spot ensures a high level of detection quality and facilitates alignment. Autocollimation technology ensures that the sensor reliably detects objects at close range as well as through small drilled holes. The photoelectric sensors also feature an IO-Link function, so that initial system performance diagnostics can be done independently. Furthermore, IO-Link permits the integration of additional functions such as meters directly into the sensor. There is no need for complex control programming.

At a glance

- Precise laser light spot, laser class 1
- Stainless steel housing with hygienic design
- Latest SICK proprietary ASIC and laser technologies for outstanding background suppression and ambient light immunity
- Teach-in pushbutton can be switched between detection of transparent and tiny non-transparent objects
- ECOLAB certified, tested to IP 66, IP 67, IP 68 and IP 69K enclosure rating
- IO-Link (optional)

Your benefits

- Precise laser light spot for highly accurate switching
- Washable stainless steel housing reduces bacterial contamination
- Innovative hygienic design with sealed connections and unique patented membrane teach-in pushbutton
- One sensor for detecting both transparent objects and tiny non-transparent objects. This reduces the variety of sensors and saves on storage costs
- Autocollimation permits detection through very small drilled holes
- IO-Link facilitates, for example, effortless initial system performance diagnostics and uses additional sensor functions to reduce complex control programming

→ **www.mysick.com/en/W4SLG-3H**

For more information, just enter the link or scan the QR code and get direct access to technical data, CAD design models, operating instructions, software, application examples and much more.

Additional information

Detailed technical data

Features

Sensor principle	Photoelectric retro-reflective sensor
Detection principle	Autocollimation
Dimensions (W x H x D)	15.3 mm x 63.2 mm x 22.2 mm
Housing design	Hygiene
Housing design (light emission)	Rectangular, Slim
Mounting hole	M3
Sensing range max. [1]	0 m ... 4.5 m
Sensing range [1]	0 m ... 2 m
Type of light	Visible red light
Light source [2]	Laser
Light spot size (distance)	Ø 1 mm (500 mm)
Wave length	650 nm
Laser class [3]	1
Adjustment	Cable, Single teach-in button [4] / Single teach-in button (depending on type)
Special feature	Detection of transparent objects

[1] REF-AC1000.
[2] Average service life 50,000 h at T_A = +25 °C.
[3] EN60825-1:2008-05 & IEC 60825-1:2007-03 / CDRH 21 CFR 1040.10 & 1040.11.
[4] Adjustment via cable (ET): white cable or PIN2 according to the desired sensitivity > 2 ... < 8 s or put > 8 s on L+ (PNP) or on M (NPN)

F

Mechanics/electronics

Supply voltage [1]	10 V DC ... 30 V DC
Ripple [2]	< 5 V_{pp}
Power consumption [3]	≤ 30 mA
Output type	PNP / NPN (depending on type)
Output function	Complementary
Switching mode	Dark-switching [4] / Light/dark-switching [5] (depending on type)
Output current $I_{max.}$	≤ 100 mA
Response time [6]	≤ 0.5 ms
Switching frequency [7]	± 1,000 Hz
Connection type	Male connector, M8 [8] / Cable, 2 m [9] (depending on type)
Mechanical connection	D12 adapter shaft
Circuit protection	A [10], B [11], C [12]
Protection class	III
Weight	
Connector M8 [8]	140 g
Cable [9]	180 g
IO-Link	– / ✔ (COM2) (depending on type)
Housing material	Stainless steel V4A (1.4404, 316L)
Optics material	PMMA

Enclosure rating	IP 66, IP 67, IP 68, IP 69K [13]
Ambient operating temperature	–10 °C ... +50 °C
Ambient operating temperature extended [14] [15]	–30 °C ... +55 °C
Ambient storage temperature	–30 °C ... +70 °C

[1] Limit values, operation in short-circuit protected network max. 8 A.
[2] May not exceed or fall short of V_S tolerances.
[3] Without load.
[4] Q = dark-switching.
[5] Q = light-switching.
[6] Signal transit time with resistive load.
[7] With light/dark ratio 1:1.
[8] Tightening torque, max.: 0.6 Nm.
[9] Do not bend below 0 °C.
[10] A = V_S connections reverse-polarity protected.
[11] B = inputs and output reverse-polarity protected.
[12] C = interference suppression.
[13] Only in case of correctly mounted IP 69K connecting cable.
[14] As of T_a = 50 °C, a max. supply voltage $V_{max.}$ = 24 V and a max. load current $I_{max.}$ = 50 mA is permitted.
[15] Using the sensor below T_a = –10 °C is possible, if the sensor is turned on at T_a > –10 °C, then the environment cools down and the sensor is not disconnected from the supply voltage during the whole time. It is not allowed to turn on the sensor below T_a = –10 °C.

Ordering information

Other models available at www.mysick.com/en/W4SLG-3H

F

WL4SLG-3H

- **Sensor principle:** photoelectric retro-reflective sensor

Sensing range max. [1]	Mechanical connection	Output type	Switching mode	Adjustment	Connection	Connection diagram	Model name	Part no.
0 m ... 4.5 m	D12 adapter shaft	PNP	Dark-switching [2]	Cable, Single teach-in button [3]	Connector M8, 4-pin	Cd-195	WL4SLG-3F5234H	1058278
					Cable, 4-wire, 2 m, PVC	Cd-212	WL4SLG-3F4134H	1058283
			Light/dark-switching [4]	Single teach-in button	Connector M8, 4-pin	Cd-083	WL4SLG-3P5232H	1058276
					Cable, 4-wire, 2 m, PVC	Cd-094	WL4SLG-3P4132H	1058282
		NPN	Light/dark-switching [4]	Single teach-in button	Cable, 4-wire, 2 m, PVC	Cd-094	WL4SLG-3N4132H	1058284

[1] REF-AC1000.
[2] Q = dark-switching.
[3] Adjustment via cable (ET): white cable or PIN2 according to the desired sensitivity > 2 ... < 8 s or put > 8 s on L+ (PNP) or on M (NPN)
[4] Q = light-switching.

WL4SLG-3H, IO-Link

- **Sensor principle:** photoelectric retro-reflective sensor
- **IO-Link:** standard functions

Sensing range max. [1]	Mechanical connection	Output type	Switching mode	Adjustment	Connection	Connection diagram	Model name	Part no.
0 m ... 4.5 m	D12 adapter shaft	PNP	Light/dark-switching [2]	Single teach-in button	Connector M8, 4-pin	Cd-098	WL4SLGC-3P5232H	1058277

[1] REF-AC1000.
[2] Q = light-switching.

Dimensional drawings

Dimensions in mm (inch)

WL4SLG-3H, connector

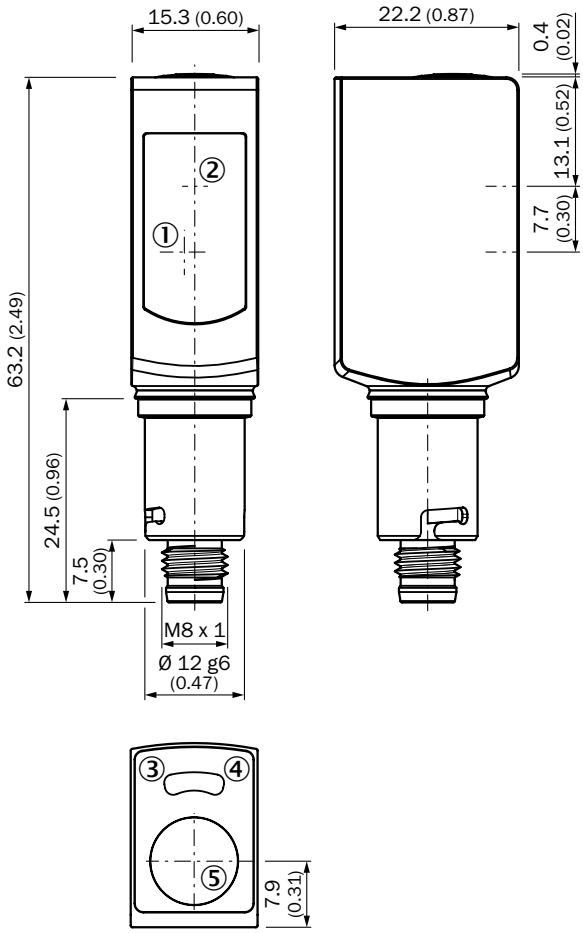

① Center of receiver's optical axis
② Center of optical axis, sender
③ Status indicator LED, yellow: Status of received light beam
④ Status indicator LED green: power on
⑤ Single teach-in button

WL4SLG-3H, cable

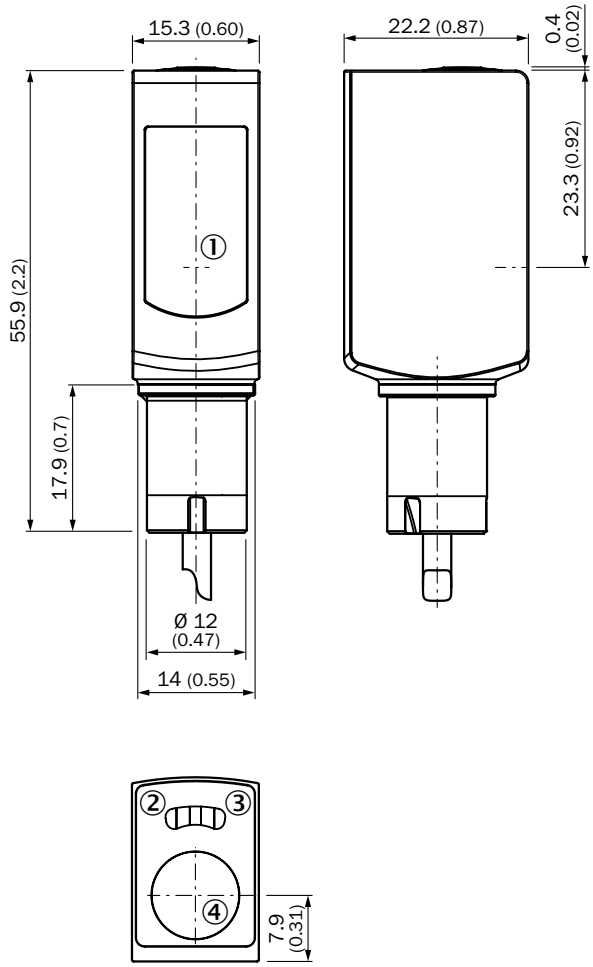

① Center of optical axis
② Status indicator LED, yellow: Status of received light beam
③ Status indicator LED green: power on
④ Single teach-in button

F

Characteristic curves

Operating reserve

WL4SLG-3H

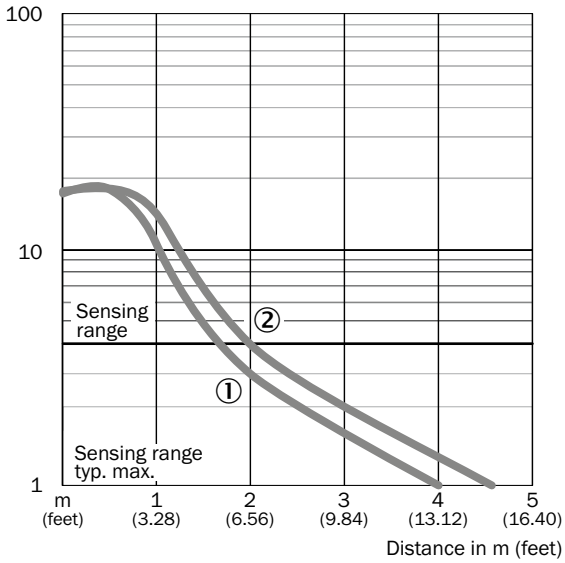

① PLV14-A / PLH25-M12 / PLH25-D12
② P41F / REF-AC1000

Bar diagrams

WL4SLG-3H

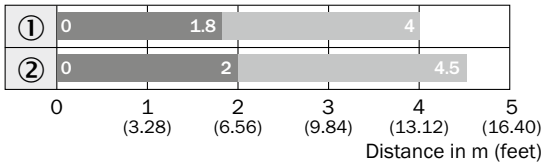

Sensing range Sensing range max.

① PLV14-A / PLH25-M12 / PLH25-D12
② P41F / REF-AC1000

F

Light spot diameter

WL4SLG-3H, overview

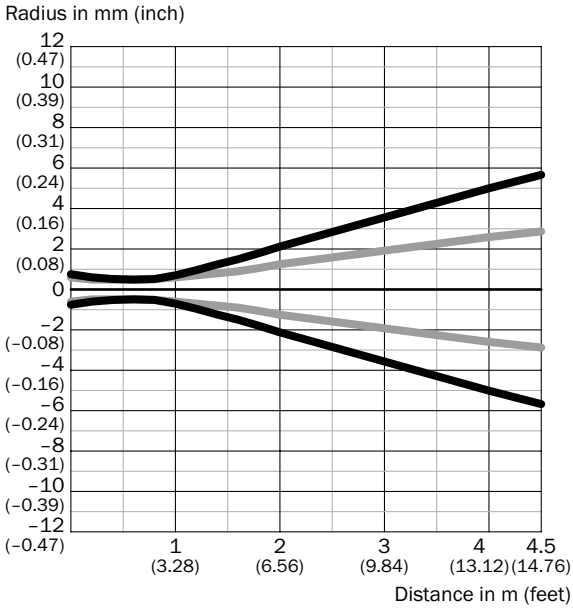

Dimensions in mm (inch)

Sensing range	Vertical	Horizontal
0.5 m **(1.64 feet)**	< 1.0 (0.04)	< 1.0 (0.04)
1 m **(3.28 feet)**	1.5 (0.06)	1.2 (0.05)
2 m **(6.56 feet)**	4.3 (0.17)	2.6 (0.10)
4.5 m **(14.76 feet)**	11.3 (0.44)	5.6 (0.22)

Vertical
Horizontal

WL4SLG-3, detailed view

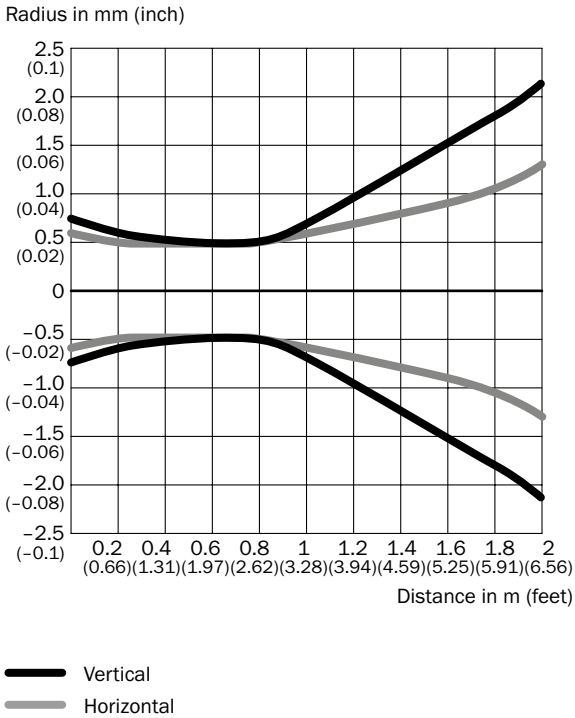

F

Connection diagram

Cd-083

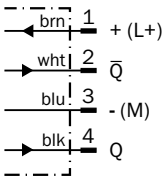

Cd-094

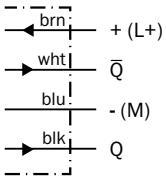

Cd-098

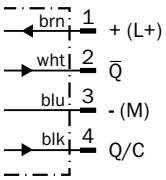

Cd-195

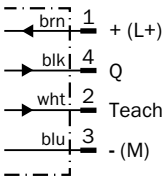

Cd-212

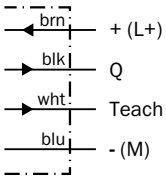

Recommended accessories

Plug connectors and cables

Connecting cable (female connector-open), hygienic systems

- **Cable material:** PP
- **Connector material:** PP

Figure	Connection type head A	Connection type head B	Connecting cable	Enclosure rating	Model name	Part no.
	Female connector, M8, 4-pin, straight	Cable, open conductor heads	2 m, 4-wire	IP 67, IP 69K	DOL-0804-G02MN	6033670
			5 m, 4-wire	IP 67, IP 69K	DOL-0804-G05MN	6033671
	Female connector, M8, 4-pin, angled	Cable, open conductor heads	2 m, 4-wire	IP 67, IP 69K	DOL-0804-W02MN	6033673
			5 m, 4-wire	IP 67, IP 69K	DOL-0804-W05MN	6033674
	Female connector, M12, 4-pin, straight	Cable, open conductor heads	2 m, 4-wire	IP 67, IP 69K	DOL-1204-G02MN	6028128
			5 m, 4-wire	IP 67, IP 69K	DOL-1204-G05MN	6028130
	Female connector, M12, 4-pin, angled	Cable, open conductor heads	2 m, 4-wire	IP 67, IP 69K	DOL-1204-W02MN	6028129
			5 m, 4-wire	IP 67, IP 69K	DOL-1204-W05MN	6028131

Universal bar clamp systems

- **For product family:** Hygienic Design BeftecHD for sensors with D12 adapter shaft

F

Figure	Material	Description	Model name	Part no.
	Hygienic Design, Stainless steel V4A (1.4404, 316L), Silicone (seal)	Hygienic design mounting tube with bayonet lock, 14.4 mm x 85.5 mm x 14.4 mm	BEF-HDSBR	4074403
		Hygienic design flange with seal, 40 mm x 12 mm x 40 mm	BEF-HDSF	4072880
		Hygienic design telescopic tube, straight, with bayonet lock without flange, 23 mm x 153 mm x 23 mm	BEF-HDSTRG	2067780
		Hygienic design telescopic tube, straight, with bayonet lock with flange, 40 mm x 165 mm x 40 mm	BEF-HDSTRGF	2067779
		Hygienic design telescopic tube, angled, with bayonet lock without flange, 23 mm x 125 mm x 73 mm	BEF-HDSTRW	2067778
		Hygienic design telescopic tube, angled, with bayonet lock with flange, 40 mm x 125 mm x 76 mm	BEF-HDSTRWF	2067777

Reflectors

Angular

Figure	Material	Description	Model name	Part no.
	Plastic	Chemically resistant, screw connection, 47 mm x 47 mm	P250 CHEM	5321097
	PMMA/ABS	Rectangular, screw connection, 80 mm x 80 mm	PL80A	1003865

Fine triple reflectors

Figure	Material	Description	Model name	Part no.
	PMMA/ABS	Fine triple, screw connection, suitable for laser sensors, 47 mm x 47 mm	P250F	5308843
	Plastic	Fine triple, chemically resistant, screw connection, 18 mm x 18 mm	PL10F CHEM	5321636
	Plastic	Fine triple, chemically resistant, screw connection, suitable for laser sensors, 16 mm x 38 mm	PL20F-CHEM	5326089
	PMMA/ABS	Fine triple, screw connection, suitable for laser sensors, 56 mm x 28 mm	PL30F	5326523
		Fine triple, screw connection, suitable for laser sensors, 76 mm x 45 mm	PL81-1F	5325060

Reflective tape

Figure	Description	Model name	Part no.
	Suitable for laser sensors, self-adhesive, cut, see alignment note, 56.3 mm x 56.3 mm	REF-AC1000-56	4063030

F

Special reflectors

Figure	Material	Description	Model name	Part no.
	PMMA/ABS	Antifog, for prevention of moisture fogging on the reflection area, screw connection, 56 mm x 37 mm	PL40A Antifog	5322011
	Stainless steel V4A (1.4404, 316L)	Stainless steel reflector, hygienic design, chemically resistant, Enclosure rating IP 69K, D12-adapter shaft, 25 mm x 25 mm	PLH25-D12	2063404
		Stainless steel reflector, hygienic design, chemically resistant, Enclosure rating IP 69K, M12-adapter thread, 25 mm x 25 mm	PLH25-M12	2063403
		Stainless steel reflector, wash-down design, chemically resistant, Enclosure rating IP 69K, screw connection, 14 mm x 14 mm	PLV14-A	2063405

→ **For additional accessories, please see page L-861**

High-performance object detection at close range

≥ 2 kHz

m/s

Product description

The W8 is a high-quality, miniature photoelectric sensor family specially designed for close-range applications. Autocollimation, background suppression, and high switching frequencies of 2 kHz make these sensors ideal for a broad range of applications. The series is comprised of the WTB8 photoelectric proximity sensor, the WL8 and WLG8 photoelectric retro-reflective sensor and the WSE8 photoelectric through-beam sensor. The housing is designed with M3 threaded mounting holes that provide easy and secure mounting.

At a glance

- Miniature housing with M3 threaded mounting holes
- Switching frequency up to 2 kHz
- Stainless steel mounting bracket (1.4301/304) BEF-W100-A included with delivery

Your benefits

- Highly flexible design and operational capabilities due to precise background suppression
- Quick and easy mounting due to the universally compatible M3 threaded mounting holes
- A fast switching frequency optimizes production processes
- All necessary accessories are included with delivery, decreasing installation and procurement costs
- Application versatility due to sensitivity adjustments, light/dark switching and a variety of connection options

Additional information

→ **www.mysick.com/en/W8**

For more information, just enter the link or scan the QR code and get direct access to technical data, CAD design models, operating instructions, software, application examples and much more.

Detailed technical data

Features

	WTB8	WL8
Sensor principle	Photoelectric proximity sensor	Photoelectric retro-reflective sensor
Detection principle	Background suppression	Autocollimation
Dimensions (W x H x D)	11 mm x 31 mm x 20 mm	
Housing design (light emission)	Rectangular	
Sensing range max.	5 mm ... 300 mm [1] (depending on type)	0 m ... 4 m [2]
Sensing range	20 mm ... 300 mm [1] (depending on type)	0 ... 3 m [2]
Type of light	Visible red light	
Light source [3]	LED	
Wave length	650 nm	
Adjustment	Potentiometer, 4 turns	Potentiometer, 270 °

[1] Object with 90 % reflectance (referred to standard white, DIN 5033)
[2] PL80A.
[3] Average service life of 100,000 h at T_A = +25 °C.

Mechanics/electronics

	WTB8	WL8
Supply voltage [1]	10 V DC ... 30 V DC	
Ripple [2]	± 10 %	
Power consumption [3]	≤ 30 mA	
Output type	PNP, open collector / NPN, open collector (depending on type)	
Switching mode	Light/dark-switching (manually selectable)	
Signal voltage PNP HIGH/LOW	Approx. V_S – 1.8 V / 0 V	
Signal voltage NPN HIGH/LOW	Approx. V_S / < 1.8 V	
Output current $I_{max.}$	≤ 100 mA	
Response time [4]	≤ 0.5 ms	≤ 25 ms
Switching frequency [5]	1,000 Hz	2,000 Hz
Connection type	Cable, 2 m [6] / Male connector, M8 (depending on type)	
Circuit protection	A [7], B [8], D [9]	
Weight		
Cable	50 g	
Connector M8	10 g	
Polarisation filter	–	✔
Housing material	ABS	
Optics material	PMMA	
Enclosure rating	IP 67	
Items supplied	Stainless steel mounting bracket (1.4301/304) BEF-W100-A	Stainless steel mounting bracket (1.4301/304) BEF-W100-A, Reflector P250
Ambient operating temperature	–25 °C ... +55 °C	
Ambient storage temperature	–40 °C ... +70 °C	

[1] Limit values, operation in short-circuit protected network max. 8 A.
[2] May not exceed or fall short of V_S tolerances.
[3] Without load.
[4] Signal transit time with resistive load.
[5] With light/dark ratio 1:1.
[6] Do not bend below 0 °C.
[7] A = V_S connections reverse-polarity protected.
[8] B = inputs and output reverse-polarity protected.
[9] D = outputs overcurrent and short-circuit protected.

F

Ordering information

Other models available at www.mysick.com/en/W8

WTB8

- **Sensor principle:** photoelectric proximity sensor
- **Detection principle:** background suppression
- **Switching mode:** light/dark-switching
- **Adjustment:** potentiometer, 4 turns

Sensing range max. [1]	Light spot size (distance)	Output type	Connection	Connection diagram	Model name	Part no.
5 mm ... 100 mm	Ø 6 mm (100 mm)	PNP	Cable, 3-wire, 2 m, PVC	Cd-043	WTB8-P1111	6033211
			Connector M8, 3-pin	Cd-045	WTB8-P2111	6033213
			Connector M8, 4-pin	Cd-066	WTB8-P2211	6033215
		NPN	Cable, 3-wire, 2 m, PVC	Cd-043	WTB8-N1111	6033210
			Connector M8, 3-pin	Cd-045	WTB8-N2111	6033212
			Connector M8, 4-pin	Cd-066	WTB8-N2211	6033214
30 mm ... 300 mm	Ø 6 mm (100 mm)	PNP	Cable, 3-wire, 2 m, PVC	Cd-043	WTB8-P1131	6033205
			Connector M8, 3-pin	Cd-045	WTB8-P2131	6033207
			Connector M8, 4-pin	Cd-066	WTB8-P2231	6033209
		NPN	Cable, 3-wire, 2 m, PVC	Cd-043	WTB8-N1131	6033204
			Connector M8, 3-pin	Cd-045	WTB8-N2131	6033206
			Connector M8, 4-pin	Cd-066	WTB8-N2231	6033208

[1] Object with 90 % reflectance (referred to standard white, DIN 5033)

F

WL8

- **Sensor principle:** photoelectric retro-reflective sensor
- **Detection principle:** autocollimation
- **Switching mode:** light/dark-switching
- **Adjustment:** potentiometer, 270 °

Sensing range max. [1]	Light spot size (distance)	Output type	Connection	Connection diagram	Model name	Part no.
0 m ... 4 m	Ø 30 mm (1 m)	PNP	Cable, 3-wire, 2 m, PVC	Cd-043	WL8-P1131	6033177
			Connector M8, 3-pin	Cd-045	WL8-P2131	6033180
			Connector M8, 4-pin	Cd-066	WL8-P2231	6033182
		NPN	Cable, 3-wire, 2 m, PVC	Cd-043	WL8-N1131	6033176
			Connector M8, 3-pin	Cd-045	WL8-N2131	6033179
			Connector M8, 4-pin	Cd-066	WL8-N2231	6033181

[1] PL80A.

Dimensional drawings

Dimensions in mm (inch)

WTB8

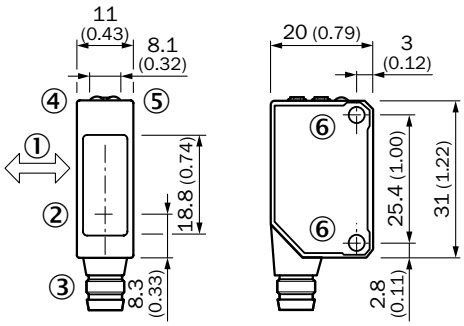

① Standard direction
② Center of optical axis
③ Connection
④ Orange LED indicator: switching output active
⑤ LED indicator green: stability indicator
⑥ Threaded mounting hole M3, max. tightening torque: 0.6 Nm

WL8

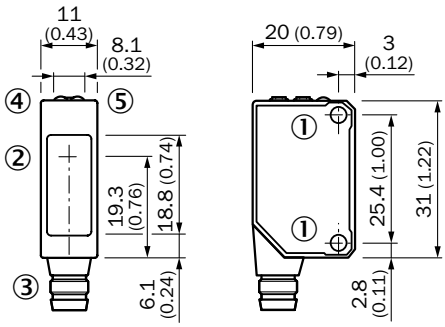

① Threaded mounting hole M3, max. tightening torque: 0.6 Nm
② Center of optical axis
③ Connection
④ Orange LED indicator: switching output active
⑤ LED indicator green: stability indicator

Adjustments

WTB8

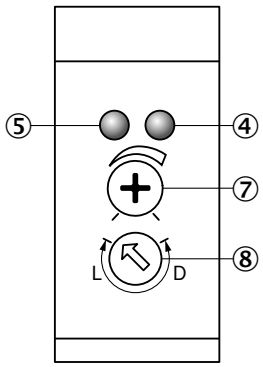

④ Orange LED indicator: switching output active
⑤ LED indicator green: stability indicator
⑦ Sensing range adjustment
⑧ Light/ dark rotary switch:
L = light switching, D = dark switching

WL8

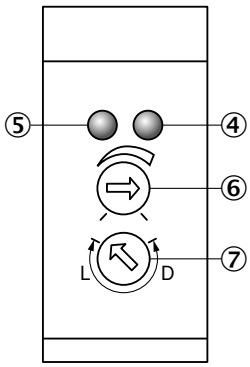

④ Orange LED indicator: switching output active
⑤ LED indicator green: stability indicator
⑥ Sensitivity adjustment
⑦ Light/ dark rotary switch:
L = light switching, D = dark switching

F

Characteristic curves

Black-white shift

WTB8, 100 mm

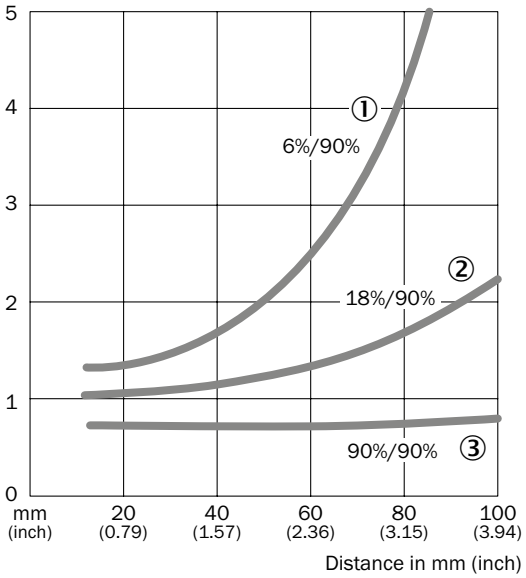

① Sensing range on black, 6 % remission
② Sensing range on gray, 18 % remission
③ Sensing range on white, 90 % remission

WTB8, 300 mm

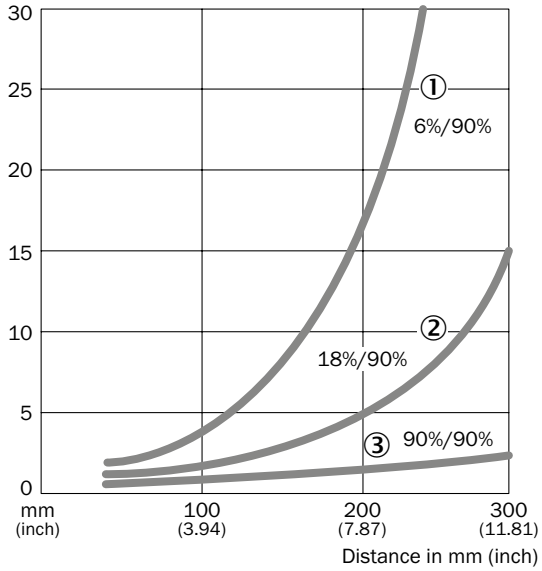

① Sensing range on black, 6 % remission
② Sensing range on gray, 18 % remission
③ Sensing range on white, 90 % remission

F

Operating reserve

WL8

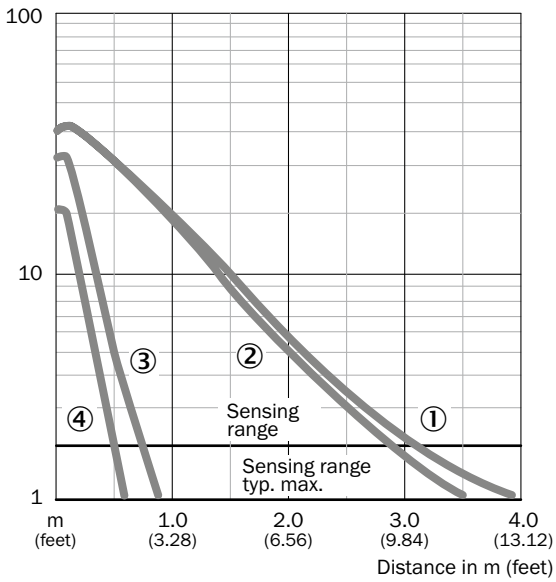

① PL80A
② P250
③ P45
④ Reflective tape Diamond Grade

Bar diagrams

WTB8, 100 mm

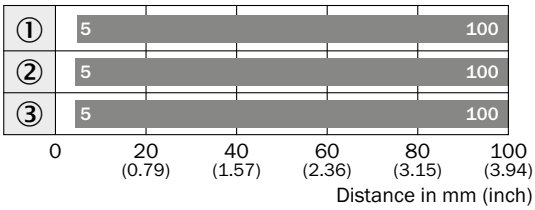

Sensing range

① Sensing range on black, 6 % remission
② Sensing range on gray, 18 % remission
③ Sensing range on white, 90 % remission

WTB8, 300 mm

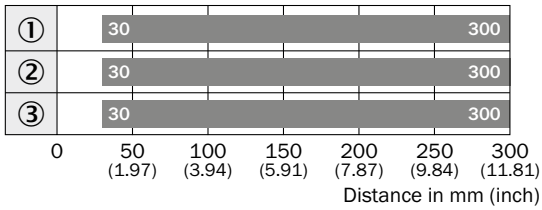

Sensing range

① Sensing range on black, 6 % remission
② Sensing range on gray, 18 % remission
③ Sensing range on white, 90 % remission

WL8

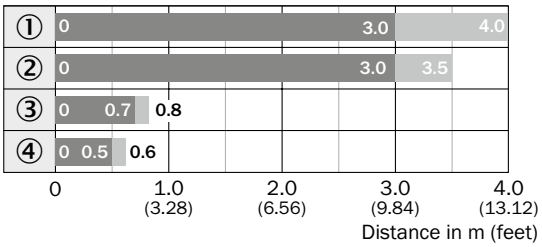

Sensing range Sensing range max.

① PL80A
② P250
③ P45
④ Reflective tape Diamond Grade

Connection diagram

Cd-043

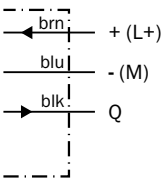

Cd-045

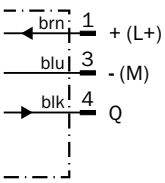

Cd-066

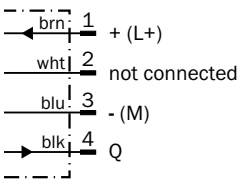

Recommended accessories

Mounting brackets/plates

Mounting brackets

Figure	Material	Description	Model name	Part no.
	Stainless steel	Mounting bracket for wall mounting	BEF-W100-A	5311520
	Steel, zinc coated	Mounting bracket for floor mounting	BEF-W100-B	5311521

Plug connectors and cables

Connecting cable (female connector-open), PVC

- **Cable material:** PVC
- **Connector material:** TPU

Figure	Connection type head A	Connection type head B	Connecting cable	Enclosure rating	Model name	Part no.
	Female connector, M8, 3-pin, straight	Cable, open conductor heads	2 m, 3-wire	IP 67	DOL-0803-G02M	6010785
			5 m, 3-wire	IP 67	DOL-0803-G05M	6022009
	Female connector, M8, 3-pin, angled	Cable, open conductor heads	2 m, 3-wire	IP 67	DOL-0803-W02M	6008489
			5 m, 3-wire	IP 67	DOL-0803-W05M	6022010
	Female connector, M8, 4-pin, straight	Cable, open conductor heads	2 m, 4-wire	IP 67	DOL-0804-G02M	6009870
			5 m, 4-wire	IP 67	DOL-0804-G05M	6009872
	Female connector, M8, 4-pin, angled	Cable, open conductor heads	2 m, 4-wire	IP 67	DOL-0804-W02M	6009871
			5 m, 4-wire	IP 67	DOL-0804-W05M	6009873

Female connector (ready to assemble)M8, 3-pin

Figure	Connection type head A	Connection type head B	Connector material	Enclosure rating	Model name	Part no.
	Female connector, M8, 3-pin, straight	Screw-type terminals	PBT	IP 67	DOS-0803-G	7902077
	Female connector, M8, 3-pin, angled	Pin penetration	PBT	IP 67	DOS-0803-W	7902078
	Female connector, M8, 4-pin, straight	Screw-type terminals	PBT	IP 67	DOS-0804-G	6009974
	Female connector, M8, 4-pin, angled	Pin penetration	PBT	IP 67	DOS-0804-W	6009975

F

Universal bar clamp systems

Figure	Material	Description	Model name	Part no.
	Zinc plated steel (sheet), Diecast zinc (clamp)	Plate N08 for universal clamp bracket	BEF-KHS-N08	2051607

Device protection (mechanical)

Protective housing/tubes

Figure	Material	Description	Model name	Part no.
	Stainless steel 1.4571	Safety bracket for floor mounting	BEF-SW-W4S	2051497

Reflectors

Angular

Figure	Material	Description	Model name	Part no.
	PMMA/ABS	Rectangular, screw connection, 47 mm x 47 mm	P250	5304812
		Rectangular, screw connection, 38 mm x 15 mm	PL20A	1012719
		Rectangular, screw connection, 56 mm x 28 mm	PL30A	1002314
		Rectangular, screw connection, 37 mm x 56 mm	PL40A	1012720
		Rectangular, screw connection, 80 mm x 80 mm	PL80A	1003865

Reflective tape

Figure	Description	Model name	Part no.
	Self-adhesive, 50 mm x 60 mm	REF-IRF-56	5314244

Round

Figure	Material	Description	Model name	Part no.
	PMMA/ABS	Round, plugable for metal plates	PL22-3	1004488

→ **For additional accessories, please see page L-861**

F

Photoelectric sensor detects transparent objects at close range

F

Product description

The WL8G is a high-quality, miniature retro-reflective clear material photoelectric sensor for detection of transparent objects in close-range applications. Autocollimation optics enable the reflector to be positioned as close to the sensor's front face as necessary. The housing design, with M3 threaded mounting holes, ensures easy and secure installation.

At a glance

- Autocollimation
- Standard miniature housing with M3 threaded mounting holes
- Light/dark switching selectable via rotary switch
- Adjustable sensing range
- All necessary accessories (BEF-W100-A and P250) are included with delivery

Your benefits

- Reliable object detection of transparent objects even at the shortest distances (no blind spot) or through narrow gaps
- Highly visible light spot makes alignment quick and easy
- Reliable detection of all materials, including small and/or transparent objects, min. attenuation 15 %
- All necessary accessories (bracket and reflector) are included with delivery, reducing installation and procurement costs
- M3 mounting hole provides quick installation

Additional information

→ **www.mysick.com/en/W8G**

For more information, just enter the link or scan the QR code and get direct access to technical data, CAD design models, operating instructions, software, application examples and much more.

Detailed technical data

Features

Sensor principle	Photoelectric retro-reflective sensor
Detection principle	Autocollimation
Dimensions (W x H x D)	11 mm x 31 mm x 20 mm
Housing design (light emission)	Rectangular
Sensing range max. [1]	0 m ... 3 m
Sensing range [1]	0 ... 1.7 m
Type of light	Visible red light
Light source [2]	LED
Light spot size (distance)	Ø 70 mm (2 m)
Wave length	650 nm
Adjustment	Potentiometer, 270 °
Special feature	Detection of transparent objects

[1] PL80A.
[2] Average service life of 100,000 h at T_A = +25 °C.

Mechanics/electronics

Supply voltage [1]	10 V DC ... 30 V DC
Ripple [2]	± 10 %
Power consumption [3]	≤ 30 mA
Output type	PNP, open collector / NPN, open collector (depending on type)
Switching mode	Light/dark-switching (manually selectable)
Signal voltage PNP HIGH/LOW	Approx. V_S – 1.8 V / 0 V
Signal voltage NPN HIGH/LOW	Approx. V_S / < 1.8 V
Output current $I_{max.}$	100
Response time [4]	≤ 0.5 ms
Switching frequency [5]	1,000
Attenuation along light beam	≤ 20 %
Connection type	Cable, 2 m [6] / Male connector, M8 (depending on type)
Circuit protection	A [7], B [8], D [9]
Weight	
Cable [6]	50 g
Connector	10 g
Polarisation filter	✔
Housing material	ABS
Optics material	PMMA
Enclosure rating	IP 67
Items supplied	Stainless steel mounting bracket (1.4301/304) BEF-W100-A, Reflector P250F
Ambient operating temperature	–25 °C ... +55 °C
Ambient storage temperature	–40 °C ... +70 °C

[1] Limit values, operation in short-circuit protected network max. 8 A.
[2] May not exceed or fall short of V_S tolerances.
[3] Without load.
[4] Signal transit time with resistive load.
[5] With light/dark ratio 1:1.
[6] Do not bend below 0 °C.
[7] A = V_S connections reverse-polarity protected.
[8] B = inputs and output reverse-polarity protected.
[9] D = outputs overcurrent and short-circuit protected.

F

F

Ordering information

Other models available at www.mysick.com/en/W8G

WL8G

- **Sensor principle:** photoelectric retro-reflective sensor
- **Detection principle:** autocollimation
- **Switching mode:** light/dark-switching
- **Adjustment:** potentiometer, 270 °
- **Items supplied:** stainless steel mounting bracket (1.4301/304) BEF-W100-A, Reflector P250F

Sensing range max. [1]	Output type	Connection	Connection diagram	Model name	Part no.
0 m ... 3 m	PNP	Cable, 3-wire 2 m PVC	Cd-043	WL8G-P1131	6033184
		Connector M8, 3-pin	Cd-045	WL8G-P2131	6033186
		Connector M8, 4-pin	Cd-066	WL8G-P2231	6033188
	NPN	Cable, 3-wire 2 m PVC	Cd-043	WL8G-N1131	6033183
		Connector M8, 3-pin	Cd-045	WL8G-N2131	6033185
		Connector M8, 4-pin	Cd-066	WL8G-N2231	6033187

[1] PL80A.

Dimensional drawings

Dimensions in mm (inch)

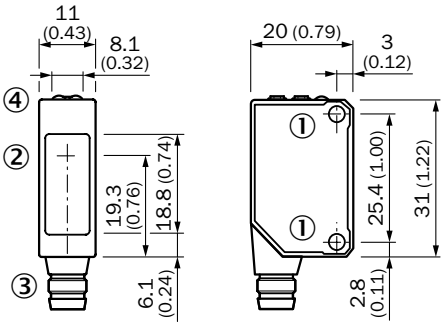

① Threaded mounting hole M3, max. tightening torque: 0.6 Nm
② Center of optical axis
③ Connection
④ Orange LED indicator: switching output active

Adjustments

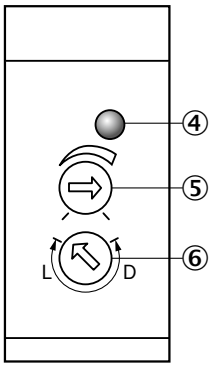

④ Orange LED indicator: switching output active
⑤ Sensitivity adjustment
⑥ Light/ dark rotary switch:L = light switching, D = dark switching

Characteristic curves

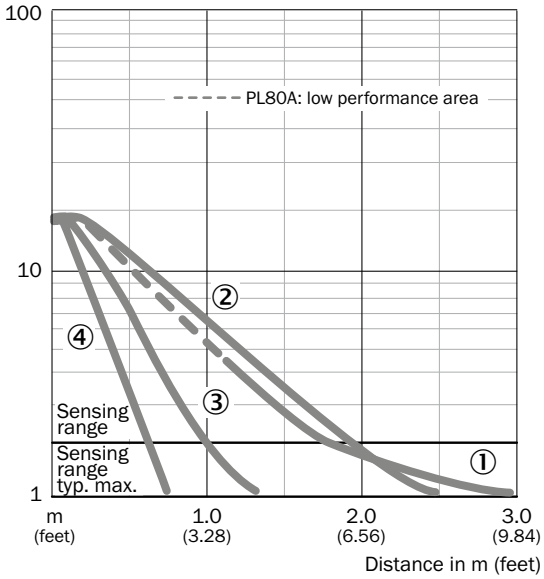

① PL80A
② P250F
③ PL20F
④ PL10F

Bar diagrams

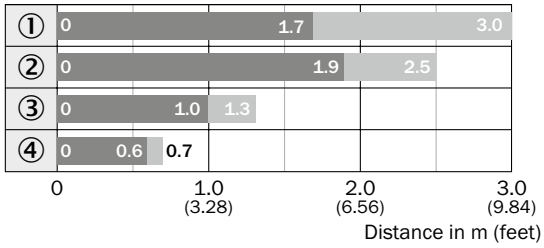

Sensing range
Sensing range typ. max.

① PL80A
② P250F
③ PL20F
④ PL10F

F

Connection diagram

Cd-043

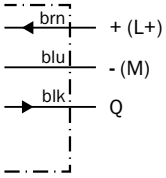

Cd-045

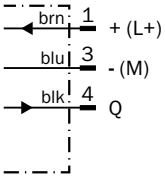

Cd-066

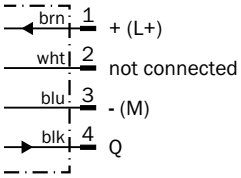

Recommended accessories

Mounting brackets/plates

Mounting brackets

Figure	Material	Description	Model name	Part no.
	Stainless steel	Mounting bracket for wall mounting	BEF-W100-A	5311520
	Steel, zinc coated	Mounting bracket for floor mounting	BEF-W100-B	5311521

Plug connectors and cables

Connecting cable (female connector-open), PVC

- **Cable material:** PVC
- **Connector material:** TPU

Figure	Connection type head A	Connection type head B	Connecting cable	Enclosure rating	Model name	Part no.
	Female connector, M8, 3-pin, straight	Cable, open conductor heads	2 m, 3-wire	IP 67	DOL-0803-G02M	6010785
			5 m, 3-wire	IP 67	DOL-0803-G05M	6022009
	Female connector, M8, 3-pin, angled	Cable, open conductor heads	2 m, 3-wire	IP 67	DOL-0803-W02M	6008489
			5 m, 3-wire	IP 67	DOL-0803-W05M	6022010
	Female connector, M8, 4-pin, straight	Cable, open conductor heads	2 m, 4-wire	IP 67	DOL-0804-G02M	6009870
			5 m, 4-wire	IP 67	DOL-0804-G05M	6009872
	Female connector, M8, 4-pin, angled	Cable, open conductor heads	2 m, 4-wire	IP 67	DOL-0804-W02M	6009871
			5 m, 4-wire	IP 67	DOL-0804-W05M	6009873

Female connector (ready to assemble)

Figure	Connection type head A	Connection type head B	Connector material	Enclosure rating	Model name	Part no.
	Female connector, M8, 3-pin, straight	Screw-type terminals	PBT	IP 67	DOS-0803-G	7902077
	Female connector, M8, 3-pin, angled	Pin penetration	PBT	IP 67	DOS-0803-W	7902078
	Female connector, M8, 4-pin, straight	Screw-type terminals	PBT	IP 67	DOS-0804-G	6009974
	Female connector, M8, 4-pin, angled	Pin penetration	PBT	IP 67	DOS-0804-W	6009975

Universal bar clamp systems

Figure	Material	Description	Model name	Part no.
	Zinc plated steel (sheet), Diecast zinc (clamp)	Plate N08 for universal clamp bracket	BEF-KHS-N08	2051607

Device protection (mechanical)

Protective housing/tubes

Figure	Material	Description	Model name	Part no.
	Stainless steel 1.4571	Safety bracket for floor mounting	BEF-SW-W4S	2051497

Reflectors

Angular

Figure	Material	Description	Model name	Part no.
	PMMA/ABS	Rectangular, screw connection, 80 mm x 80 mm	PL80A	1003865

Fine triple reflectors

Figure	Material	Description	Model name	Part no.
	PMMA/ABS	Fine triple, screw connection, suitable for laser sensors, 47 mm x 47 mm	P250F	5308843
		Fine triple, screw connection, suitable for laser sensors, 18 mm x 18 mm	PL10F	5311210
	Plastic	Fine triple, chemically resistant, screw connection, 18 mm x 18 mm	PL10F CHEM	5321636
	PMMA/ABS	Fine triple, screw connection, suitable for laser sensors, 38 mm x 16 mm	PL20F	5308844
	Plastic	Fine triple, chemically resistant, screw connection, suitable for laser sensors, 16 mm x 38 mm	PL20F-CHEM	5326089
	PMMA/ABS	Fine triple, screw connection, suitable for laser sensors, 56 mm x 28 mm	PL30F	5326523
		Fine triple, screw connection, suitable for laser sensors, 76 mm x 45 mm	PL81-1F	5325060

Reflective tape

Figure	Description	Model name	Part no.
	Suitable for laser sensors, self-adhesive, cut, see alignment note, 56.3 mm x 56.3 mm	REF-AC1000-56	4063030

Special reflectors

Figure	Material	Description	Model name	Part no.
	Stainless steel V4A (1.4404, 316L)	Stainless steel reflector, hygienic design, chemically resistant, Enclosure rating IP 69K, D12-adapter shaft, 25 mm x 25 mm	PLH25-D12	2063404
		Stainless steel reflector, hygienic design, chemically resistant, Enclosure rating IP 69K, M12-adapter thread, 25 mm x 25 mm	PLH25-M12	2063403
		Stainless steel reflector, wash-down design, chemically resistant, Enclosure rating IP 69K, screw connection, 14 mm x 14 mm	PLV14-A	2063405

→ **For additional accessories, please see page L-861**

F

Compact, high-performance INOX sensors for harsh wash down environments

STAIN-LESS STEEL

IP 69K

F

Product description

The W8 INOX is a miniature product family, especially for applications in harsh ambient conditions. The high-quality IP 69K stainless steel housing (1.4404/SUS316L) in combination with high-performance PPSU and PEEK plastics make these sensors suitable for a broad range of applications. In addition to a highly visible LED light spot, the W8 INOX includes M3 threaded mounting holes that reduce mounting time. These compact, lightweight sensors provide maximum resistance to harsh wash down environments in the food and beverage industry. The four models – through-beam, retro-reflective, energetic and background suppression (BGS) – provide reliable, high-performance solutions for harsh environments.

At a glance

- Rugged IP 69K stainless steel housing 1.4404/316L
- Front screen made of high-performance PPSU plastic that is resistant to heat and chemicals
- Potentiometer made of mechanically stable high-performance PEEK (polyether ketone) plastic
- Constructed with FDA-approved materials
- Well-defined, highly visible light spot
- M3 threaded mounting holes and stainless steel mounting bracket (1.4301/304) included with delivery

Your benefits

- High reliability due to an IP 69K stainless steel housing, which withstands aggressive cleaning agents or cooling lubricants
- Quick and easy mounting due to universally compatible M3 threaded mounting holes
- Compact housing saves space (equal to W8 plastic version)
- Highly visible light spot provides easy alignment
- All necessary accessories are included, which simplifies installation

Additional information

→ **www.mysick.com/en/W8_Inox**

For more information, just enter the link or scan the QR code and get direct access to technical data, CAD design models, operating instructions, software, application examples and much more.

Detailed technical data

Features

	WTB8 Inox	WTE8 Inox	WL8 Inox	WSE8 Inox
Sensor principle	Photoelectric proximity sensor		Photoelectric retro-reflective sensor	Through-beam photoelectric sensor
Detection principle	Background suppression	Energetic	Standard optics	–
Dimensions (W x H x D)	11 mm x 21 mm x 33.3 mm			
Housing design (light emission)	Rectangular			
Sensing range max.	5 mm ... 500 mm [1] (depending on type)	0 mm ... 950 mm [1]	0.01 m ... 6.5 m [2]	0 m ... 45 m
Sensing range	5 mm ... 300 mm [1] (depending on type)	0 mm ... 700 mm [1]	0.01 m ... 4.5 m [3]	0 m ... 20 m
Type of light	Visible red light			
Light source [4]	LED			
Angle of dispersion	–	Approx. 3°		Approx. 2.5°
Wave length	650 nm	645 nm		
Adjustment	Potentiometer, 4 turns	Potentiometer, 270 °		

[1] Object with 90 % reflectance (referred to standard white, DIN 5033)
[2] PL80A.
[3] P250A.
[4] Average service life of 100,000 h at T_A = +25 °C.

F

Mechanics/electronics

	WTB8 Inox	WTE8 Inox	WL8 Inox	WSE8 Inox
Supply voltage [1]	10 V DC ... 30 V DC			
Ripple [2]	± 10 %			
Power consumption [3]	≤ 30 mA			–
Power consumption, sender	–			≤ 15 mA [4]
Power consumption, receiver	–			≤ 20 mA [4]
Output type	PNP / NPN (depending on type)			
Switching mode	Light/dark-switching (selectable via light/dark selector)			
Signal voltage PNP HIGH/LOW	Approx. V_S – 1.8 V / 0 V			
Signal voltage NPN HIGH/LOW	Approx. V_S / < 1.8 V			
Output current $I_{max.}$	100 mA			
Response time [5]	≤ 0.5 ms			
Switching frequency [6]	1,000 Hz			
Angle of reception	–			Approx. 15°
Connection type	Cable, 2 m [7] / Male connector, M8 (depending on type)			
Circuit protection	A [8], B [9], D [10]			
Protection class	III			
Weight	83.6 g			
Polarisation filter	–		✔	–
Housing material	Stainless steel V4A (1.4404, 316L)			

	WTB8 Inox	WTE8 Inox	WL8 Inox	WSE8 Inox
Enclosure rating	IP 69K			
Items supplied	Stainless steel mounting bracket (1.4301/304) BEF-W100-A		Stainless steel mounting bracket (1.4301/304) BEF-W100-A, P250A reflector	Stainless steel mounting bracket (1.4301/304) BEF-W100-A
Ambient operating temperature [11]	–30 °C ... +60 °C			
Ambient storage temperature	–40 °C ... +70 °C			

[1] Limit values, reverse-polarity protected operation in short-circuit protected network max. 8 A.
[2] May not exceed or fall short of V_S tolerances.
[3] Without load.
[4] Receiver without load.
[5] Signal transit time with resistive load.
[6] With light/dark ratio 1:1.
[7] Do not bend below 0 °C.
[8] A = V_S connections reverse-polarity protected.
[9] B = inputs and output reverse-polarity protected.
[10] D = outputs overcurrent and short-circuit protected.
[11] At an air humidity of 35 ... 95 %.

Ordering information

Other models available at www.mysick.com/en/W8_Inox

F

WTB8 Inox

- **Sensor principle:** photoelectric proximity sensor
- **Detection principle:** background suppression
- **Switching mode:** light/dark-switching
- **Adjustment:** potentiometer, 4 turns

Sensing range max. [1]	Light spot size (distance)	Output type	Connection	Connection diagram	Model name	Part no.
5 mm ... 150 mm	Ø 8 mm (100 mm)	PNP	Cable, 3-wire 2 m PVC	Cd-043	WTB8-P1111V	6041457
			Connector M8, 3-pin	Cd-045	WTB8-P2111V	6041458
			Connector M8, 4-pin	Cd-066	WTB8-P2211V	6041459
		NPN	Cable, 3-wire 2 m PVC	Cd-043	WTB8-N1111V	6041453
			Connector M8, 3-pin	Cd-045	WTB8-N2111V	6041454
			Connector M8, 4-pin	Cd-066	WTB8-N2211V	6041455
10 mm ... 500 mm	Ø 22 mm (350 mm)	PNP	Cable, 3-wire 2 m PVC	Cd-043	WTB8-P1131V	6041465
			Connector M8, 3-pin	Cd-045	WTB8-P2131V	6041466
			Connector M8, 4-pin	Cd-066	WTB8-P2231V	6041467
		NPN	Cable, 3-wire 2 m PVC	Cd-043	WTB8-N1131V	6041461
			Connector M8, 3-pin	Cd-045	WTB8-N2131V	6041462
			Connector M8, 4-pin	Cd-066	WTB8-N2231V	6041463

[1] Object with 90 % reflectance (referred to standard white, DIN 5033)

WTE8 Inox

- **Sensor principle:** photoelectric proximity sensor
- **Detection principle:** energetic
- **Switching mode:** light/dark-switching
- **Adjustment:** potentiometer, 270 °

Sensing range max. [1]	Light spot size (distance)	Output type	Connection	Connection diagram	Model name	Part no.
0 mm ... 950 mm	Ø 35 mm (700 mm)	PNP	Cable, 3-wire 2 m PVC	Cd-043	WTE8-P1131V	6041473
			Connector M8, 3-pin	Cd-045	WTE8-P2131V	6041474
			Connector M8, 4-pin	Cd-066	WTE8-P2231V	6041475
		NPN	Cable, 3-wire 2 m PVC	Cd-043	WTE8-N1131V	6041469
			Connector M8, 3-pin	Cd-045	WTE8-N2131V	6041470
			Connector M8, 4-pin	Cd-066	WTE8-N2231V	6041471

[1] Object with 90 % reflectance (referred to standard white, DIN 5033)

WL8 Inox

- **Sensor principle:** photoelectric retro-reflective sensor
- **Detection principle:** standard optics
- **Switching mode:** light/dark-switching
- **Adjustment:** potentiometer, 270 °

Sensing range max. [1]	Light spot size (distance)	Output type	Connection	Connection diagram	Model name	Part no.
0.01 m ... 6.5 m	Ø 245 mm (4.5 m)	PNP	Cable, 3-wire 2 m PVC	Cd-043	WL8-P1131V	6041481
			Connector M8, 3-pin	Cd-045	WL8-P2131V	6041482
			Connector M8, 4-pin	Cd-066	WL8-P2231V	6041483
		NPN	Cable, 3-wire 2 m PVC	Cd-043	WL8-N1131V	6041477
			Connector M8, 3-pin	Cd-045	WL8-N2131V	6041478
			Connector M8, 4-pin	Cd-066	WL8-N2231V	6041479

[1] PL80A.

F

WSE8 Inox

- **Sensor principle:** through-beam photoelectric sensor
- **Switching mode:** light/dark-switching
- **Adjustment:** potentiometer, 270 °

Sensing range max.	Light spot size (distance)	Output type	Connection	Connection diagram	Model name	Part no.
0 m ... 45 m	Ø 900 mm (20 m)	PNP	Cable, 3-wire 2 m PVC	Cd-049	WSE8-P1131V	6041489
			Connector M8, 3-pin	Cd-051	WSE8-P2131V	6041490
			Connector M8, 4-pin	Cd-057	WSE8-P2231V	6041491
		NPN	Cable, 3-wire 2 m PVC	Cd-049	WSE8-N1131V	6041485
			Connector M8, 3-pin	Cd-051	WSE8-N2131V	6041486
			Connector M8, 4-pin	Cd-057	WSE8-N2231V	6041487

Dimensional drawings

Dimensions in mm (inch)

WTB8, 150 mm

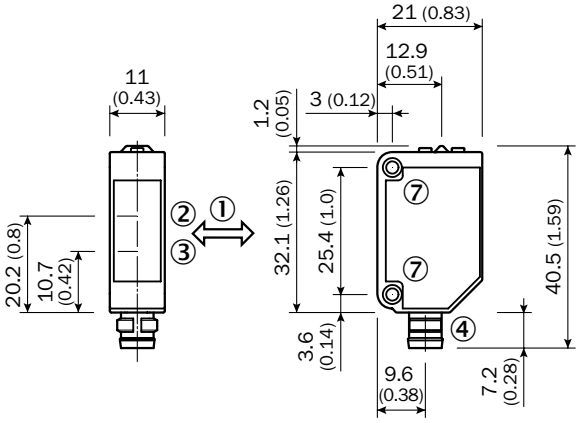

① Standard direction
② Center of optical axis, receiver
③ Center of optical axis, sender
④ Connection
⑦ Threaded mounting hole M3, max. tightening torque of 1.8 Nm for M3 screw with washer, spring ring and mounting bracket (2 x 3.2 mm borehole)

WTB8, 500 mm

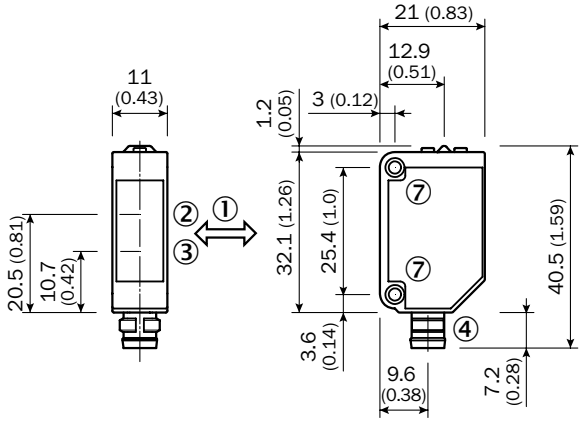

① Standard direction
② Center of optical axis, receiver
③ Center of optical axis, sender
④ Connection
⑦ Threaded mounting hole M3, max. tightening torque of 1.8 Nm for M3 screw with washer, spring ring and mounting bracket (2 x 3.2 mm borehole)

WTE8

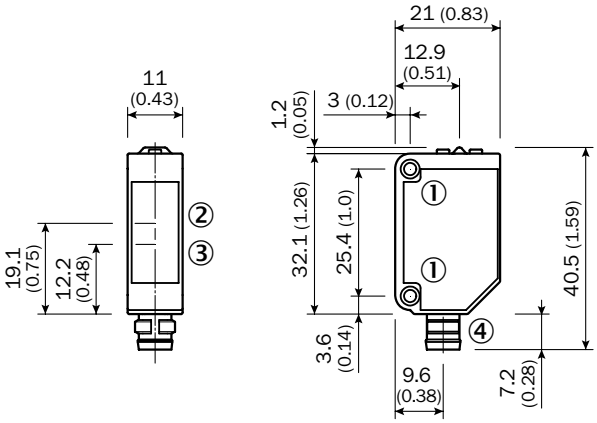

① Threaded mounting hole M3, max. tightening torque of 1.8 Nm for M3 screw with washer, spring ring and mounting bracket (2 x 3.2 mm borehole)
② Center of optical axis, receiver
③ Center of optical axis, sender
④ Connection

WL8

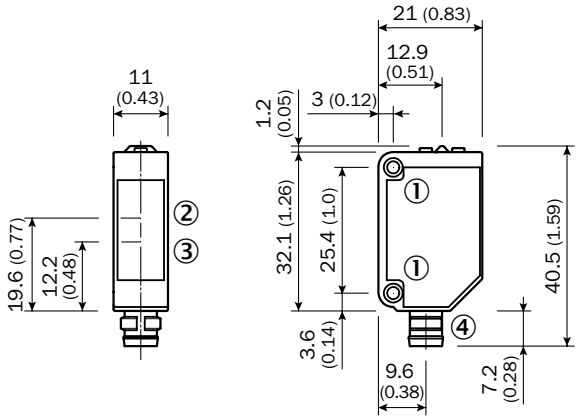

① Threaded mounting hole M3, max. tightening torque of 1.8 Nm for M3 screw with washer, spring ring and mounting bracket (2 x 3.2 mm borehole)
② Center of optical axis, receiver
③ Center of optical axis, sender
④ Connection

WSE8

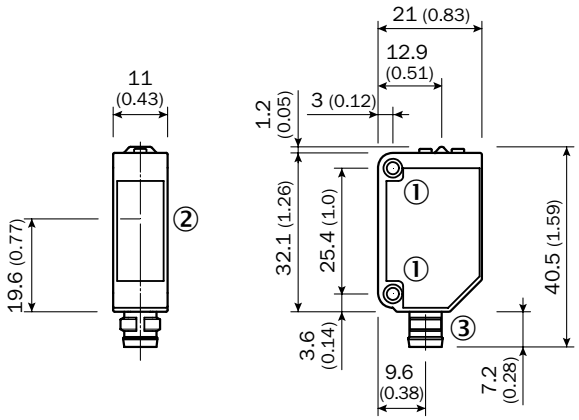

① Threaded mounting hole M3, max. tightening torque of 1.8 Nm for M3 screw with washer, spring ring and mounting bracket (2 x 3.2 mm borehole)
② Center of optical axis, sender and receiver
③ Connection

Adjustments

WTB8

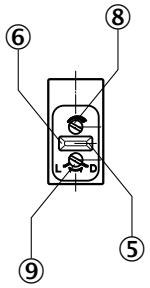

⑤ Orange LED indicator:
switching output active
⑥ LED indicator green:
stability indicator light up when the light received is < 0.9 or > 1.1
(based on switching threshold Q = 1)
⑧ Sensing range adjustment:
potentiometer, 4-turn
⑨ Light/ dark rotary switch:
L = light switching, D = dark switching

WTE8, WL8

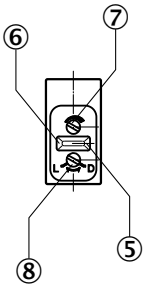

⑤ Orange LED indicator:
switching output active
⑥ LED indicator green:
stability indicator light up when the light received is < 0.9 or > 1.1
(based on switching threshold Q = 1)
⑦ Sensitivity control:
potentiometer 270°
⑧ Light/ dark rotary switch:
L = light switching, D = dark switching

WSE8

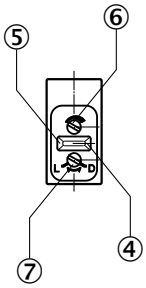

④ Orange LED indicator:
switching output active (only WE)
⑤ LED indicator green:
stability indicator light up when the light received is < 0.9 or > 1.1
(based on switching threshold Q = 1)
⑥ Sensitivity control:
potentiometer 270° on WE
⑦ Light/ dark rotary switch:
L = light switching, D = dark switching

F

Characteristic curves

Black-white shift

WTB8, 150 mm

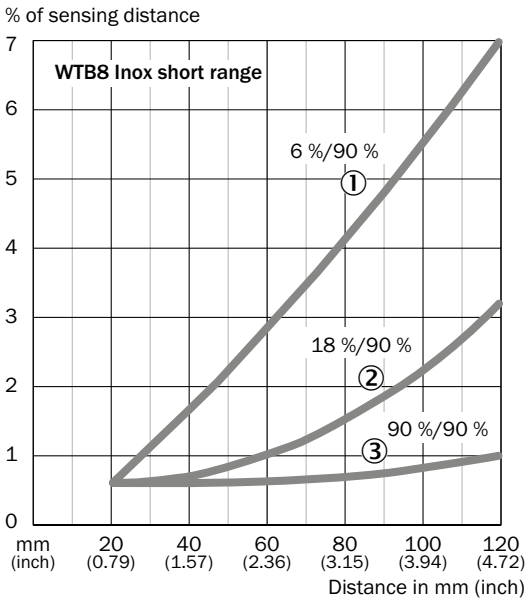

① Sensing range on black, 6 % remission
② Sensing range on gray, 18 % remission
③ Sensing range on white, 90 % remission

WTB8, 500 mm

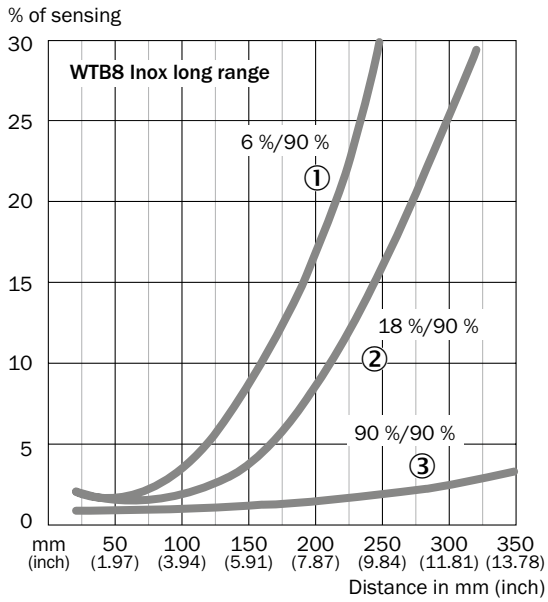

① Sensing range on black, 6 % remission
② Sensing range on gray, 18 % remission
③ Sensing range on white, 90 % remission

F

WTE8

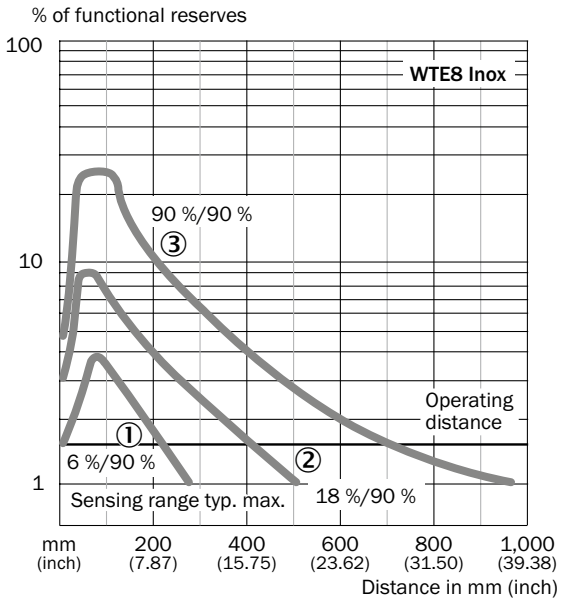

① Sensing range on black, 6 % remission
② Sensing range on gray, 18 % remission
③ Sensing range on white, 90 % remission

Operating reserve

WL8

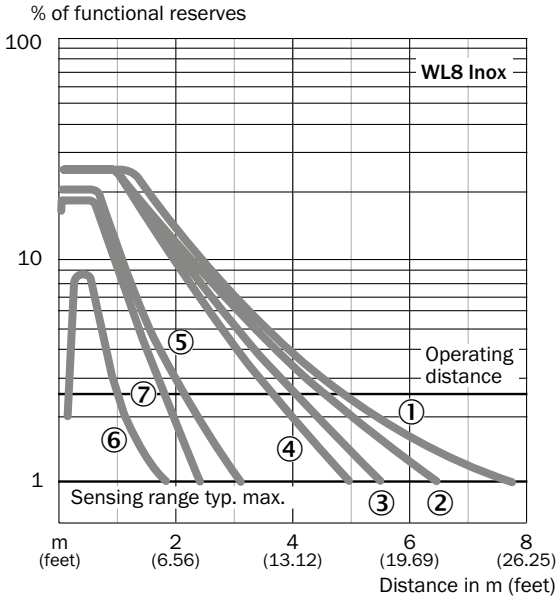

WSE8

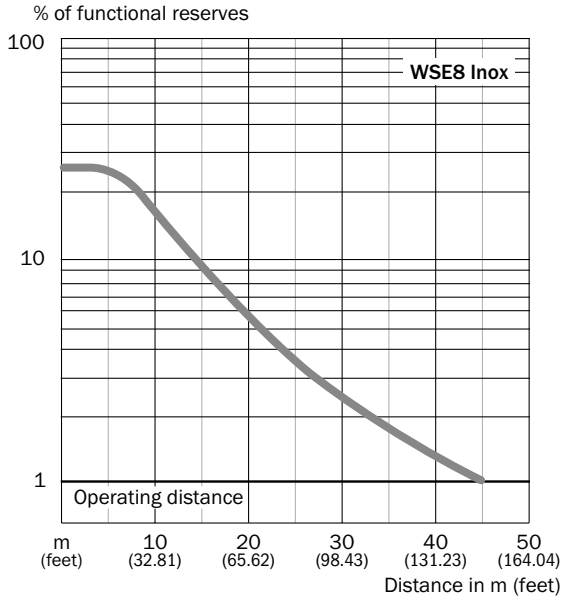

① PL80A
② P250
③ PL40A
④ PL30A
⑤ PL20A
⑥ Reflective tape Diamond Grade (100 mm x 100 mm/3.94 inch x 3.94 inch)
⑦ P45

F

Bar diagrams

WTB8, 150 mm

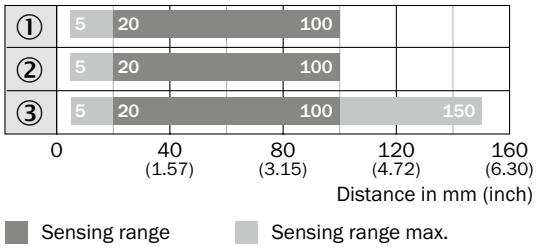

① Sensing range on black, 6 % remission
② Sensing range on gray, 18 % remission
③ Sensing range on white, 90 % remission

WTB8, 500 mm

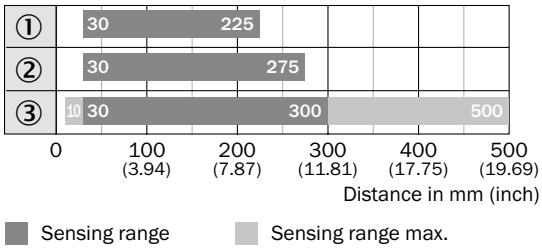

① Sensing range on black, 6 % remission
② Sensing range on gray, 18 % remission
③ Sensing range on white, 90 % remission

WTE8

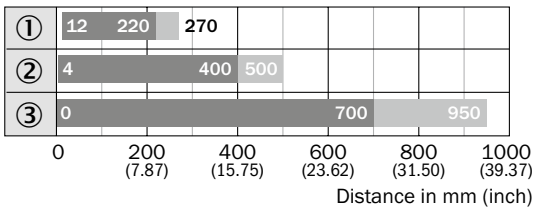

① Sensing range on black, 6 % remission
② Sensing range on gray, 18 % remission
③ Sensing range on white, 90 % remission

WL8

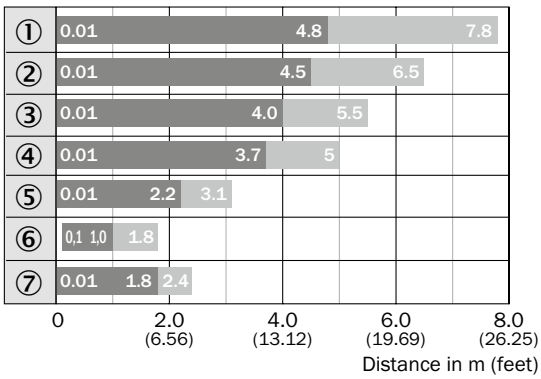

① PL80A
② P250
③ PL40A
④ PL30A
⑤ PL20A
⑥ Reflective tape Diamond Grade
⑦ P45

WSE8

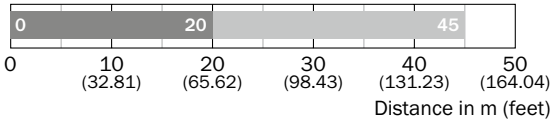

F

Connection diagram

Cd-043

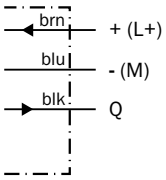

Cd-045

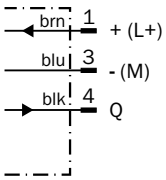

Cd-049

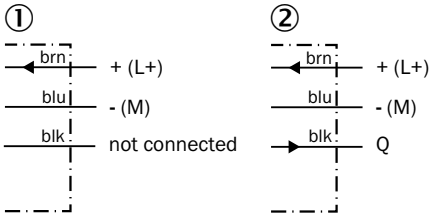

① Sender
② Receiver

Cd-051

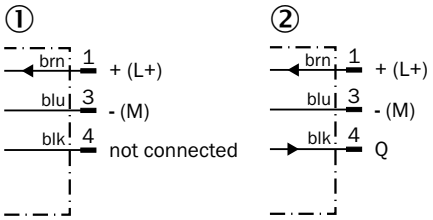

① Sender
② Receiver

Cd-057

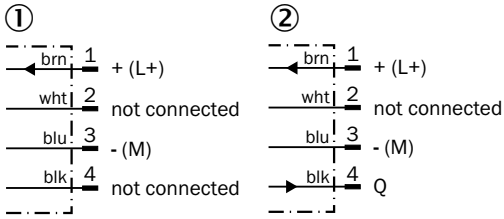

① Sender
② Receiver

Cd-066

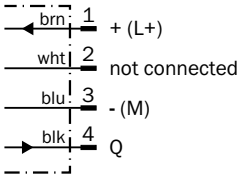

Recommended accessories

Mounting brackets/plates

Mounting brackets

Figure	Material	Description	Model name	Part no.
	Stainless steel	Mounting bracket for wall mounting	BEF-W100-A	5311520
	Steel, zinc coated	Mounting bracket for floor mounting	BEF-W100-B	5311521

Plug connectors and cables

Connecting cable (female connector-open), hygienic systems

- **Cable material:** PP
- **Connector material:** PP

Figure	Connection type head A	Connection type head B	Connecting cable	Enclosure rating	Model name	Part no.
	Female connector, M8, 3-pin, straight	Cable, open conductor heads	2 m, 3-wire	IP 67, IP 69K	DOL-0803-G02MN	6033664
			5 m, 3-wire	IP 67, IP 69K	DOL-0803-G05MN	6033665
	Female connector, M8, 3-pin, angled	Cable, open conductor heads	2 m, 3-wire	IP 67, IP 69K	DOL-0803-W02MN	6033667
			5 m, 3-wire	IP 67, IP 69K	DOL-0803-W05MN	6033668
			10 m, 3-wire	IP 67, IP 69K	DOL-0803-W10MN	6033669
	Female connector, M8, 4-pin, straight	Cable, open conductor heads	2 m, 4-wire	IP 67, IP 69K	DOL-0804-G02MN	6033670
			5 m, 4-wire	IP 67, IP 69K	DOL-0804-G05MN	6033671
			10 m, 4-wire	IP 67, IP 69K	DOL-0804-G10MN	6033672
	Female connector, M8, 4-pin, angled	Cable, open conductor heads	2 m, 4-wire	IP 67, IP 69K	DOL-0804-W02MN	6033673
			5 m, 4-wire	IP 67, IP 69K	DOL-0804-W05MN	6033674

Universal bar clamp systems

Figure	Material	Description	Model name	Part no.
	Stainless steel 1.4571 (sheet), Stainless steel 1.4408 (clamp)	Plate N08N for universal clamp bracket	BEF-KHS-N08N	2051616

F

Device protection (mechanical)

Protective housing/tubes

Figure	Material	Description	Model name	Part no.
	Stainless steel 1.4571	Safety bracket for floor mounting	BEF-SW-W4S	2051497

Reflectors

Angular

Figure	Material	Description	Model name	Part no.
	Plastic	Chemically resistant, screw connection, 47 mm x 47 mm	P250 CHEM	5321097

Fine triple reflectors

Figure	Material	Description	Model name	Part no.
	Plastic	Fine triple, chemically resistant, screw connection, suitable for laser sensors, 16 mm x 38 mm	PL20F-CHEM	5326089

F

Reflective tape

Figure	Description	Model name	Part no.
	Self-adhesive, 50 mm x 60 mm	REF-IRF-56	5314244

Special reflectors

Figure	Material	Description	Model name	Part no.
	Plastic	Chemically resistant, screw connection, 38 mm x 15 mm	PL20 CHEM	5321089
	PMMA/ABS	Antifog, for prevention of moisture fogging on the reflection area, screw connection, 56 mm x 37 mm	PL40A Antifog	5322011
	Plastic	Rectangular, screw connection M3, countersunk screw head, chemical resistent, 56 mm x 37 mm	PL40B-CHEM	5326088
	Stainless steel V4A (1.4404, 316L)	Stainless steel reflector, hygienic design, chemically resistant, Enclosure rating IP 69K, D12-adapter shaft, 25 mm x 25 mm	PLH25-D12	2063404
		Stainless steel reflector, hygienic design, chemically resistant, Enclosure rating IP 69K, M12-adapter thread, 25 mm x 25 mm	PLH25-M12	2063403
		Stainless steel reflector, wash-down design, chemically resistant, Enclosure rating IP 69K, screw connection, 14 mm x 14 mm	PLV14-A	2063405

→ **For additional accessories, please see page L-861**

F

Laser photoelectric proximity sensor with background suppression for close-range applications

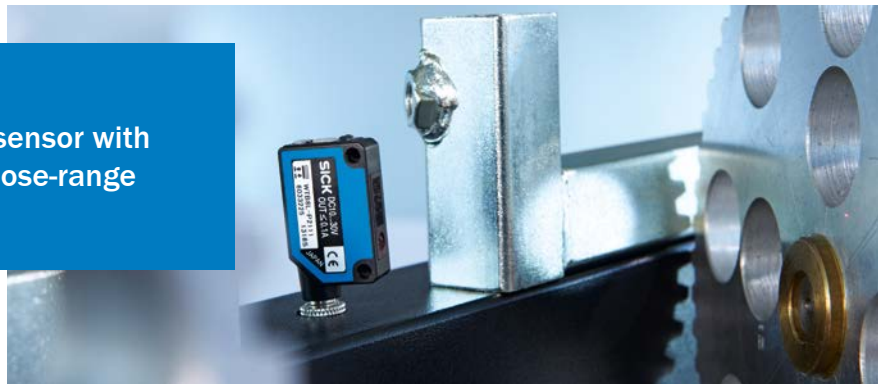

F

CDRH

Additional information

Product description

The WTB8L is a high-quality miniature photoelectric proximity sensor with laser emitter LEDs and outstanding background suppression specially designed for close-range applications. High switching frequencies of 2 kHz make these sensors suitable for a broad range of applications. The housing design, with M3 threaded mounting holes, ensures easy and secure mounting.

At a glance

- Laser class 1
- Background suppression
- Standard miniature housing with M3 threaded mounting holes
- Switching frequency up to 2 kHz
- Light/dark switching via rotary switch
- Mounting bracket BEF-W100-A is included with delivery

Your benefits

- Highly flexible design and operational capabilities due to precise background suppression
- Reliable detection of small objects, regardless of color or surface qualities
- Rapid switching frequency reliably detects objects travelling at high speeds which allows to optimize the production processes
- Highly visible laser light spot simplifies alignment
- All necessary accessories are included with delivery, reducing installation and procurement costs

→ **www.mysick.com/en/W8_Laser**

For more information, just enter the link or scan the QR code and get direct access to technical data, CAD design models, operating instructions, software, application examples and much more.

Detailed technical data

Features

Sensor principle	Photoelectric proximity sensor
Detection principle	Background suppression
Dimensions (W x H x D)	11 mm x 31 mm x 20 mm
Housing design (light emission)	Rectangular
Sensing range max.	5 mm ... 300 mm [1] (depending on type)
Sensing range	20 mm ... 300 mm [1] (depending on type)
Type of light	Visible red light
Light source [2]	Laser
Wave length	650 nm
Laser class	I
Adjustment	Potentiometer, 4 turns

[1] Object with 90 % reflectance (referred to standard white, DIN 5033)
[2] Average service life of 100,000 h at T_A = +25 °C.

Mechanics/electronics

Supply voltage [1]	10 V DC ... 30 V DC
Ripple [2]	± 10 %
Power consumption [3]	≤ 30 mA
Output type	PNP, open collector / NPN, open collector (depending on type)
Switching mode	Light/dark-switching (manually selectable)
Signal voltage PNP HIGH/LOW	Approx. V_S – 1.8 V / 0 V
Signal voltage NPN HIGH/LOW	Approx. V_S / < 1.8 V
Output current $I_{max.}$	≤ 100 mA
Response time [4]	≤ 0.25 ms
Switching frequency [5]	2,000 Hz
Connection type	Cable, 2 m [6] / Male connector, M8 (depending on type)
Circuit protection	A [7], B [8], D [9]
Weight	
Cable [6]	50 g
Connector	10 g
Housing material	ABS
Optics material	PMMA
Enclosure rating	IP 67
Items supplied	Stainless steel mounting bracket (1.4301/304) BEF-W100-A
Ambient operating temperature	–10 °C ... +50 °C
Ambient storage temperature	–40 °C ... +70 °C

[1] Limit values, operation in short-circuit protected network max. 8 A.
[2] May not exceed or fall short of V_S tolerances.
[3] Without load.
[4] Signal transit time with resistive load.
[5] With light/dark ratio 1:1.
[6] Do not bend below 0 °C.
[7] A = V_S connections reverse-polarity protected.
[8] B = inputs and output reverse-polarity protected.
[9] D = outputs overcurrent and short-circuit protected.

F

Ordering information

Other models available at www.mysick.com/en/W8_Laser

WTB8L

- **Sensor principle:** photoelectric proximity sensor
- **Detection principle:** background suppression
- **Switching mode:** light/dark-switching
- **Adjustment:** potentiometer, 4 turns

Sensing range max. [1]	Light spot size (distance)	Output type	Connection	Connection diagram	Model name	Part no.
5 mm ... 100 mm	Ø 1 mm (100 mm)	PNP	Cable, 4-wire 2 m PVC	Cd-116	WTB8L-P1111	6033223
			Connector M8, 3-pin	Cd-045	WTB8L-P2111	6033225
			Connector M8, 4-pin	Cd-078	WTB8L-P2211	6033227
		NPN	Cable, 4-wire 2 m PVC	Cd-116	WTB8L-N1111	6033222
			Connector M8, 3-pin	Cd-045	WTB8L-N2111	6033224
			Connector M8, 4-pin	Cd-078	WTB8L-N2211	6033226
30 mm ... 300 mm	Ø 1.5 mm (300 mm)	PNP	Cable, 4-wire 2 m PVC	Cd-116	WTB8L-P1131	6033217
			Connector M8, 3-pin	Cd-045	WTB8L-P2131	6033219
			Connector M8, 4-pin	Cd-078	WTB8L-P2231	6033221
		NPN	Cable, 4-wire 2 m PVC	Cd-116	WTB8L-N1131	6033216
			Connector M8, 3-pin	Cd-045	WTB8L-N2131	6033218
			Connector M8, 4-pin	Cd-078	WTB8L-N2231	6033220

[1] Object with 90 % reflectance (referred to standard white, DIN 5033)

F

Dimensional drawings

Dimensions in mm (inch)

WTB8L

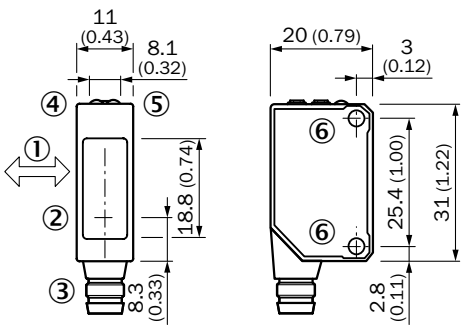

① Standard direction
② Center of optical axis
③ Connection
④ Orange LED indicator: switching output active
⑤ LED indicator green: stability indicator
⑥ Threaded mounting hole M3, max. tightening torque: 0.6 Nm

Adjustments

WTB8L

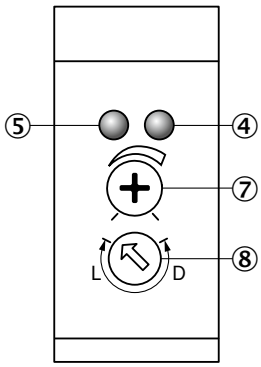

④ Orange LED indicator: switching output active
⑤ LED indicator green: stability indicator
⑦ Sensing range adjustment
⑧ Light/ dark rotary switch:
L = light switching, D = dark switching

Characteristic curves

Black-white shift

WTB8L, 100 mm

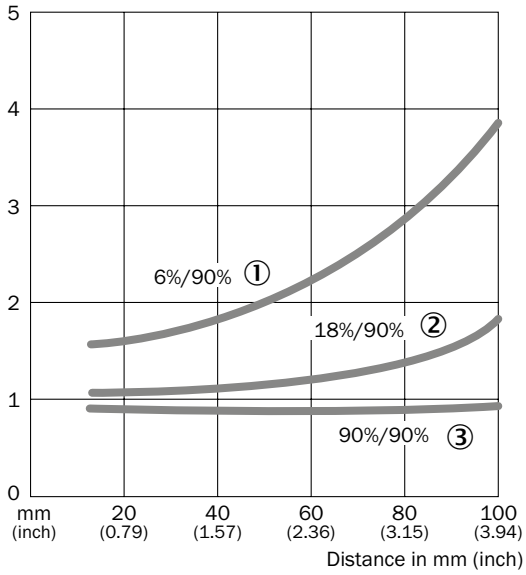

① Sensing range on black, 6 % remission
② Sensing range on gray, 18 % remission
③ Sensing range on white, 90 % remission

WTB8L, 300 mm

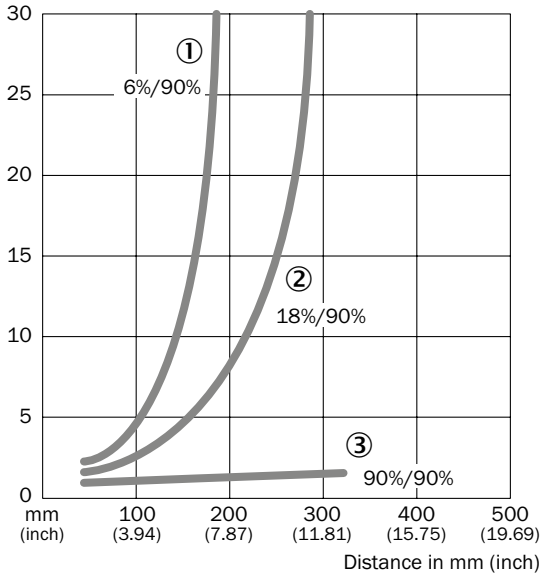

① Sensing range on black, 6 % remission
② Sensing range on gray, 18 % remission
③ Sensing range on white, 90 % remission

F

Bar diagrams

WTB8L, 100 mm

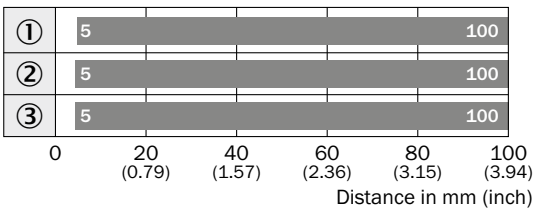

Sensing range

① Sensing range on black, 6 % remission
② Sensing range on gray, 18 % remission
③ Sensing range on white, 90 % remission

WTB8L, 300 mm

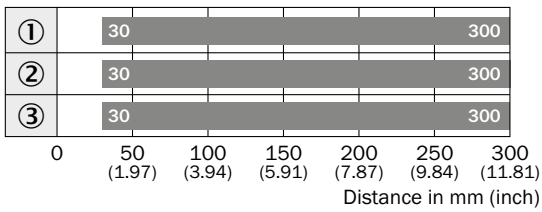

Sensing range

① Sensing range on black, 6 % remission
② Sensing range on gray, 18 % remission
③ Sensing range on white, 90 % remission

Connection diagram

Cd-045

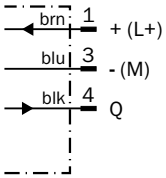

Cd-078

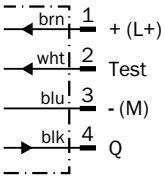

Cd-116

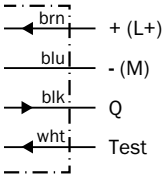

Recommended accessories

Mounting brackets/plates

Mounting brackets

Figure	Material	Description	Model name	Part no.
	Stainless steel	Mounting bracket for wall mounting	BEF-W100-A	5311520
	Steel, zinc coated	Mounting bracket for floor mounting	BEF-W100-B	5311521

Plug connectors and cables

Connecting cable (female connector-open), PVC

- **Cable material:** PVC
- **Connector material:** TPU

Figure	Connection type head A	Connection type head B	Connecting cable	Enclosure rating	Model name	Part no.
	Female connector, M8, 3-pin, straight	Cable, open conductor heads	2 m, 3-wire	IP 67	DOL-0803-G02M	6010785
			5 m, 3-wire	IP 67	DOL-0803-G05M	6022009
	Female connector, M8, 3-pin, angled	Cable, open conductor heads	2 m, 3-wire	IP 67	DOL-0803-W02M	6008489
			5 m, 3-wire	IP 67	DOL-0803-W05M	6022010
	Female connector, M8, 4-pin, straight	Cable, open conductor heads	2 m, 4-wire	IP 67	DOL-0804-G02M	6009870
			5 m, 4-wire	IP 67	DOL-0804-G05M	6009872
	Female connector, M8, 4-pin, angled	Cable, open conductor heads	2 m, 4-wire	IP 67	DOL-0804-W02M	6009871
			5 m, 4-wire	IP 67	DOL-0804-W05M	6009873

Female connector (ready to assemble)

Figure	Connection type head A	Connection type head B	Connector material	Enclosure rating	Model name	Part no.
	Female connector, M8, 3-pin, straight	Screw-type terminals	PBT	IP 67	DOS-0803-G	7902077
	Female connector, M8, 3-pin, angled	Pin penetration	PBT	IP 67	DOS-0803-W	7902078
	Female connector, M8, 4-pin, straight	Screw-type terminals	PBT	IP 67	DOS-0804-G	6009974
	Female connector, M8, 4-pin, angled	Pin penetration	PBT	IP 67	DOS-0804-W	6009975

Universal bar clamp systems

Figure	Material	Description	Model name	Part no.
	Zinc plated steel (sheet), Diecast zinc (clamp)	Plate N08 for universal clamp bracket	BEF-KHS-N08	2051607

F

Device protection (mechanical)

Protective housing/tubes

Figure	Material	Description	Model name	Part no.
	Stainless steel 1.4571	Safety bracket for floor mounting	BEF-SW-W4S	2051497

→ **For additional accessories, please see page L-861**

F

Miniature photoelectric sensors for standard applications

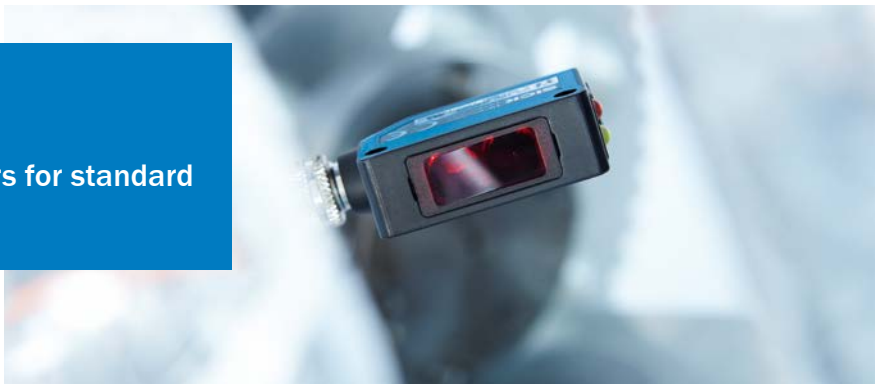

Available from June 2014

Product description

W100-2 miniature photoelectric sensors are compatible with all standard detection principles (through-beam photoelectric sensors, photoelectric retro-reflective sensors, photoelectric retro-reflective sensors for detecting transparent objects, energetic sensors, and sensors with background blanking), making them an ideal sensor family for detection applications.

The housing design includes M3 threaded mounting holes, spaced one inch apart, that allows for straightforward, standardized, and inexpensive mounting.

As a result, the W100-2 product family offers an economical photoelectric sensor solution with outstanding performance.

At a glance

- Reliable detection behavior, rugged housing and immunity to ambient light
- WT100-2 photoelectric proximity sensor (energetic or with background blanking)
- WL100-2 photoelectric retro-reflective sensor; variant available for detecting transparent objects
- WS/WE100-2 through-beam photoelectric sensor
- Various connection types available (standard: 2 m cable; M8 male connector, 3-pin; M8 male connector, 4-pin; male cable connector available on request)
- Light/dark switching and sensitivity adjustment possible
- Wide range of accessories

Your benefits

- Reliable detection in standard applications
- Short downtime and high throughput thanks to reliable object detection
- Ability to handle a wide range of detection principles within a single standardized housing, reducing the number of model variants
- Simple commissioning thanks to easily visible display LEDs
- Easy to set up thanks to user-friendly potentiometer (dependent on model)
- Standard housing that is compatible with many commonly used mounting systems
- Easy mounting thanks to 1-inch hole spacing
- High level of operating reserve minimizes susceptibility to contamination

Additional information

→ **www.mysick.com/en/W100-2**

For more information, just enter the link or scan the QR code and get direct access to technical data, CAD design models, operating instructions, software, application examples and much more.

8015327/2014-02-08
Subject to change without notice

Detailed technical data

Features

	WT100-2	WL100-2	WS/WE100-2
Sensor principle	Photoelectric proximity sensor	Photoelectric retro-reflective sensor	Through-beam photoelectric sensor
Detection principle	Energetic / Background blanking (depending on type)	–	
Dimensions (W x H x D)	11 m x 31 m x 20 m		
Housing design (light emission)	Rectangular		
Sensing range max.	0 mm ... 1,000 mm [1] (depending on type)	0.01 m ... 7.5 m [2] (depending on type)	0 m ... 30 m
Sensing range	0 mm ... 750 mm [1] (depending on type)	0.01 m ... 6 m [2] (depending on type)	0 m ... 20 m
Type of light	Visible red light		
Light source [3]	LED		
Angle of dispersion	Approx. 6.8° / approx. 5° (depending on type)	Approx. 4°	± 7.2°
Wave length	632 nm		
Adjustment	Potentiometer		Potentiometer, 270 °
Special feature	–	Detection of transparent objects (depending on type)	–

[1] Object with 90 % reflectance (referred to standard white, DIN 5033)
[2] PL80A.
[3] Average service life of 100,000 h at T_A = +25 °C.

F

Mechanics/electronics

	WT100-2	WL100-2	WS/WE100-2
Supply voltage [1]	10 V ... 30 V		
Ripple [2]	± 10 %		
Power consumption [3]	≤ 30 mA		–
Power consumption, sender	–		≤ 15 mA [3]
Power consumption, receiver	–		≤ 20 mA [3]
Output type	PNP / NPN (depending on type)		
Switching mode	Light/dark-switching (manually selectable)		
Signal voltage PNP HIGH/LOW	U_V – 1,8 V / ca. 0 V		
Signal voltage NPN HIGH/LOW	Approx. V_S / < 1.8 V		
Output current $I_{max.}$	100 mA		
Response time [4]	≤ 0.5 ms		
Switching frequency	1,000 Hz		
Angle of reception	–		± 15°
Attenuation along light beam	–	≥ 20 %	–
Connection type	Cable, 2 m [5] / Male connector, M8 (depending on type)		
Circuit protection	A [6], B [7], D [8]		
Protection class	III		
Polarisation filter	–	✔ / – (depending on type)	–
Housing material	ABS/PC/POM		
Optics material	PMMA		

	WT100-2	WL100-2	WS/WE100-2
Enclosure rating	IP 67		
Items supplied	Mounting bracket BEF-W100-A	Mounting bracket BEF-W100-A, Reflector P250	Mounting bracket BEF-W100-A
Ambient operating temperature	–25 °C ... +55 °C		
Ambient storage temperature	–40 °C ... +70 °C		

[1] Limit values.
[2] May not exceed or fall short of V_S tolerances.
[3] Without load.
[4] Signal transit time with resistive load.
[5] Do not bend below 0 °C.
[6] A = V_S connections reverse-polarity protected.
[7] B = output reverse-polarity protected.
[8] D = outputs overcurrent and short-circuit protected.

Ordering information

Other models available at www.mysick.com/en/W100-2

WT100-2

- **Sensor principle:** photoelectric proximity sensor
- **Switching mode:** light/dark-switching
- **Adjustment:** potentiometer
- **Items supplied:** mounting bracket BEF-W100-A

F

Detection principle	Sensing range max. [1]	Light spot size (distance)	Output type	Connection	Connection diagram	Model name	Part no.
Energetic	0 mm ... 1,000 mm	Ø 55 mm (400 mm)	PNP	Cable, 3-wire, 2 m, PVC	Cd-043	WT100-2P1439	6052372
				Connector M8, 3-pin	Cd-045	WT100-2P3439	6052373
				Connector M8, 4-pin	Cd-040	WT100-2P4439	6052374
			NPN	Cable, 3-wire, 2 m, PVC	Cd-043	WT100-2N1439	6052369
				Connector M8, 3-pin	Cd-045	WT100-2N3439	6052370
				Connector M8, 4-pin	Cd-040	WT100-2N4439	6052371
Background blanking	4 mm ... 140 mm	Ø 8 mm (90 mm)	PNP	Cable, 3-wire, 2 m, PVC	Cd-043	WT100-2P1419	6052378
				Connector M8, 3-pin	Cd-045	WT100-2P3419	6052379
				Connector M8, 4-pin	Cd-040	WT100-2P4419	6052380
			NPN	Cable, 3-wire, 2 m, PVC	Cd-043	WT100-2N1419	6052375
				Connector M8, 3-pin	Cd-045	WT100-2N3419	6052376
				Connector M8, 4-pin	Cd-040	WT100-2N4419	6052377

[1] Object with 90 % reflectance (referred to standard white, DIN 5033)

WL100-2

- **Sensor principle:** photoelectric retro-reflective sensor
- **Polfilter:** ✔
- **Switching mode:** light/dark-switching
- **Adjustment:** potentiometer
- **Items supplied:** mounting bracket BEF-W100-A, Reflector P250

Sensing range max. [1]	Light spot size (distance)	Output type	Connection	Connection diagram	Model name	Part no.
0.01 m ... 7.5 m	Ø 250 mm (3.5 mm)	PNP	Cable, 3-wire, 2 m, PVC	Cd-043	WL100-2P1439	6052360
			Connector M8, 3-pin	Cd-045	WL100-2P3439	6052361
			Connector M8, 4-pin	Cd-040	WL100-2P4439	6052362
		NPN	Cable, 3-wire, 2 m, PVC	Cd-043	WL100-2N1439	6052357
			Connector M8, 3-pin	Cd-045	WL100-2N3439	6052358
			Connector M8, 4-pin	Cd-040	WL100-2N4439	6052359

[1] PL80A.

WL100-2, detection of transparent objects

- **Sensor principle:** photoelectric retro-reflective sensor
- **Polfilter:** –
- **Switching mode:** light/dark-switching
- **Adjustment:** potentiometer
- **Items supplied:** mounting bracket BEF-W100-A, Reflector P250

Sensing range max. [1]	Light spot size (distance)	Output type	Connection	Connection diagram	Model name	Part no.
0.01 m ... 3 m	Ø 200 mm (2 mm)	PNP	Cable, 3-wire, 2 m, PVC	Cd-043	WL100-2P1429	6052384
			Connector M8, 3-pin	Cd-045	WL100-2P3429	6052385
			Connector M8, 4-pin	Cd-040	WL100-2P4429	6052386
		NPN	Cable, 3-wire, 2 m, PVC	Cd-043	WL100-2N1429	6052381
			Connector M8, 3-pin	Cd-045	WL100-2N3429	6052382
			Connector M8, 4-pin	Cd-040	WL100-2N4429	6052383

[1] PL80A.

WS/WE100-2

- **Sensor principle:** through-beam photoelectric sensor
- **Switching mode:** light/dark-switching
- **Adjustment:** potentiometer, 270 °
- **Items supplied:** mounting bracket BEF-W100-A

Sensing range max.	Light spot size (distance)	Output type	Connection	Connection diagram	Model name	Part no.
0 m ... 30 m	Ø 1,500 mm (12 mm)	PNP	Cable, 3-wire, 2 m, PVC	Cd-049	WS/WE100-2P1439	6052366
			Connector M8, 3-pin	Cd-051	WS/WE100-2P3439	6052367
			Connector M8, 4-pin	Cd-057	WS/WE100-2P4439	6052368
		NPN	Cable, 3-wire, 2 m, PVC	Cd-049	WS/WE100-2N1439	6052363
			Connector M8, 3-pin	Cd-051	WS/WE100-2N3439	6052364
			Connector M8, 4-pin	Cd-057	WS/WE100-2N4439	6052365

Dimensional drawings

Dimensions in mm (inch)

WT100, WL100

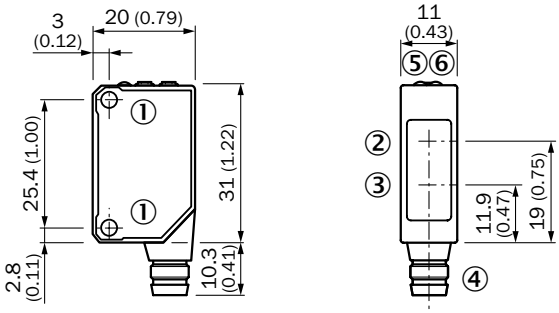

① Threaded mounting hole M3
② Center of optical axis, receiver
③ Center of optical axis, sender
④ Connection
⑤ LED indicator orange: switching output active
⑥ LED indicator green: stability indicator

WS/WE100

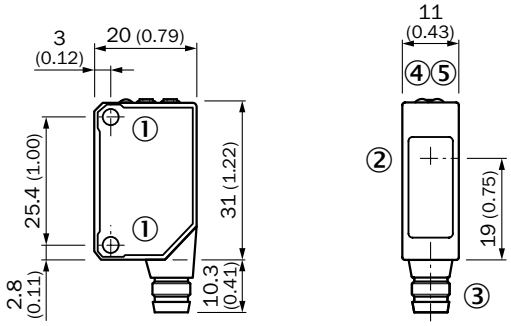

① Threaded mounting hole M3
② Center of optical axis, receiver
③ Center of optical axis, sender
④ Connection
⑤ LED indicator orange: output active
⑥ LED indicator green: stability indicator
⑦ Sensing range adjustment: potentiometer, 270°
⑧ Light/ dark rotary switch:L = light switching, D = dark switching

Adjustments

F

W100-2

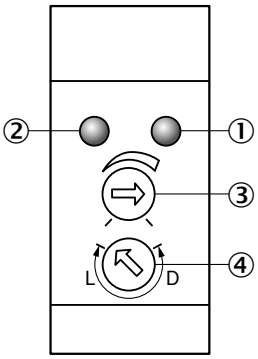

① LED indicator orange: switching output active
② LED indicator green: power on
③ Sensing range adjustment: potentiometer
④ Light/ dark rotary switch:
L = light switching, D = dark switching

Connection diagram

Cd-040

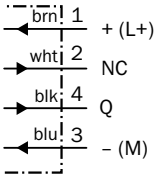

Cd-043

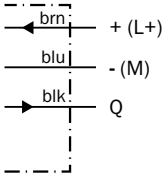

Cd-045

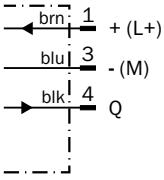

Cd-049

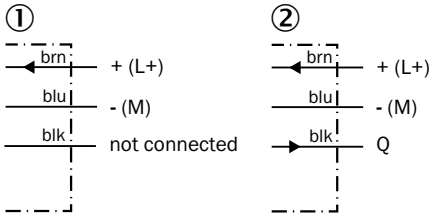

① Sender
② Receiver

Cd-051

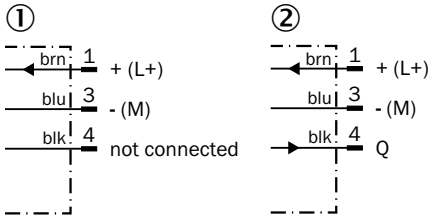

① Sender
② Receiver

Cd-057

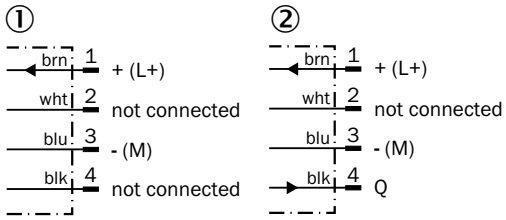

① Sender
② Receiver

Recommended accessories

F

Plug connectors and cables

Connecting cable (female connector-open), PVC

- **Cable material:** PVC
- **Connector material:** TPU

Figure	Connection type head A	Connection type head B	Connecting cable	Enclosure rating	Model name	Part no.
	Female connector, M8, 3-pin, straight	Cable, open conductor heads	2 m, 3-wire	IP 67	DOL-0803-G02M	6010785
			5 m, 3-wire	IP 67	DOL-0803-G05M	6022009
	Female connector, M8, 3-pin, angled	Cable, open conductor heads	2 m, 3-wire	IP 67	DOL-0803-W02M	6008489
			5 m, 3-wire	IP 67	DOL-0803-W05M	6022010
	Female connector, M8, 4-pin, straight	Cable, open conductor heads	2 m, 4-wire	IP 67	DOL-0804-G02M	6009870
			5 m, 4-wire	IP 67	DOL-0804-G05M	6009872
	Female connector, M8, 4-pin, angled	Cable, open conductor heads	2 m, 4-wire	IP 67	DOL-0804-W02M	6009871
			5 m, 4-wire	IP 67	DOL-0804-W05M	6009873

Male connector (ready to assemble)M8, 3-pin

Figure	Connection type head A	Connection type head B	Connector material	Enclosure rating	Model name	Part no.
	Male connector, M8, 3-pin, straight	Screw-type terminals	PBT	IP 67	STE-0803-G	6037322

Reflectors

Angular

Figure	Material	Description	Model name	Part no.
	PMMA/ABS	Rectangular, screw connection, 47 mm x 47 mm	P250	5304812
		Rectangular, screw connection, 38 mm x 15 mm	PL20A	1012719
		Rectangular, screw connection, 56 mm x 28 mm	PL30A	1002314
		Rectangular, screw connection, 37 mm x 56 mm	PL40A	1012720
		Rectangular, screw connection, 80 mm x 80 mm	PL80A	1003865

Reflective tape

Figure	Description	Model name	Part no.
	Self-adhesive, 50 mm x 60 mm	REF-IRF-56	5314244

F

Round

Figure	Material	Description	Model name	Part no.
	PMMA/ABS	Round, plugable for metal plates	PL22-3	1004488

→ **For additional accessories, please see page L-861**

F

Miniature photoelectric laser sensor provides precise detection of objects in standard applications

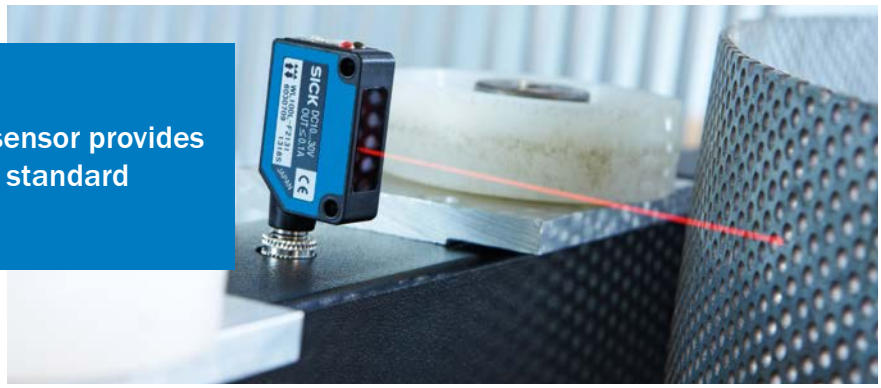

F

CDRH

Product description

The W100 Laser is a complete family of photoelectric sensors enclosed in a miniature housing. These sensors feature a laser sender LED that provides large sensing ranges for standard applications. The compact housing design with M3 threaded mounting holes allows for quick and simple mounting. The W100 Laser is a great alternative to the standard W100, especially for applications that demand higher precision or a longer sensing range.

At a glance

- Standard miniature housing with M3 threaded mounting holes
- Long sensing range
- Light/dark switching and sensitivity adjustment via rotary switch possible
- Various versions are available, including through-beam, retro-reflective and energetic
- Wide variety of accessories available
- Laser emitter LED, class 1

Your benefits

- Reliable detection of small objects
- Less contamination due to high optical operating reserve
- M3 threaded mounting holes provide easy installation
- Compact housing easily fits in applications with limited space

Additional information

→ **www.mysick.com/en/W100_Laser**

For more information, just enter the link or scan the QR code and get direct access to technical data, CAD design models, operating instructions, software, application examples and much more.

Detailed technical data

Features

	WT100L	WL100L	WS/WE100L
Sensor principle	Photoelectric proximity sensor	Photoelectric retro-reflective sensor	Through-beam photoelectric sensor
Detection principle	Energetic	Standard optics	–
Dimensions (W x H x D)	11 mm x 31 mm x 20 mm		
Housing design (light emission)	Rectangular		
Sensing range max.	0 mm ... 450 mm [1]	0.08 m ... 12 m [2]	0 m ... 35 m
Sensing range	0 mm ... 400 mm	0.08 m ... 10 m [2]	0 m ... 30 m
Type of light	Visible red light		
Light source [3]	Laser		
Light spot size (distance)	Ø 2 mm (400 mm)	Ø 12 mm (10 m)	Ø 30 mm (30 m)
Wave length	650 nm		
Laser class	1		
Adjustment	Potentiometer, 270 °		

[1] Object with 90 % reflectance (referred to standard white, DIN 5033)
[2] P250F.
[3] Average service life 50,000 h at T_A = +25 °C.

Mechanics/electronics

	WT100L	WL100L	WS/WE100L
Supply voltage [1]	10 V DC ... 30 V DC		
Ripple [2]	± 10 %		
Power consumption [3]	≤ 30 mA		–
Power consumption, sender	–		≤ 15 mA [3]
Power consumption, receiver	–		≤ 20 mA [3]
Output type	PNP, open collector / NPN, open collector (depending on type)		
Switching mode	Light/dark-switching (manually selectable)		
Signal voltage PNP HIGH/LOW	U_V – 1,8 V / ca. 0 V		
Signal voltage NPN HIGH/LOW	Approx. V_S / < 1.8 V		
Output current $I_{max.}$	100		
Response time [4]	< 0.25 ms		
Switching frequency [5]	2,000		
Connection type	Cable, 2 m [6] / Male connector, M8 (depending on type)		
Circuit protection	A [7], B [8], D [9]		
Weight			
Cable [6]	50 g		
Connector	10 g		
Polarisation filter	–	✔	–
Housing material	ABS/PC/POM, ABS/PC (depending on type)		
Optics material	PMMA		

F

	WT100L	WL100L	WS/WE100L
Enclosure rating	IP 65		
Items supplied	Stainless steel mounting bracket (1.4301/304) BEF-W100-A	Stainless steel mounting bracket (1.4301/304) BEF-W100-A, Reflector P250F	2 Stainless steel mounting brackets (1.4301/304) BEF-W100-A
Ambient operating temperature	–10 °C ... +50 °C		
Ambient storage temperature	–40 °C ... +70 °C		

[1] Limit values, operation in short-circuit protected network max. 8 A.
[2] May not exceed or fall short of V_S tolerances.
[3] Without load.
[4] Signal transit time with resistive load.
[5] With light/dark ratio 1:1.
[6] Do not bend below 0 °C.
[7] A = V_S connections reverse-polarity protected.
[8] B = inputs and output reverse-polarity protected.
[9] D = outputs overcurrent and short-circuit protected.

Ordering information

Other models available at www.mysick.com/en/W100_Laser

WT100L

- **Sensor principle:** photoelectric proximity sensor
- **Detection principle:** energetic
- **Light spot size (distance):** Ø 2 mm (400 mm)
- **Switching mode:** light/dark-switching
- **Adjustment:** potentiometer, 270 °
- **Items supplied:** stainless steel mounting bracket (1.4301/304) BEF-W100-A

F

Sensing range max. [1]	Output type	Connection	Connection diagram	Model name	Part no.
0 mm ... 450 mm	PNP	Cable, 3-wire, 2 m, PVC	Cd-043	WT100L-F1141	6030702
		Connector M8, 3-pin	Cd-045	WT100L-F2141	6030703
		Connector M8, 4-pin	Cd-066	WT100L-F2241	6030704
	NPN	Cable, 3-wire, 2 m, PVC	Cd-043	WT100L-E1141	6030705
		Connector M8, 3-pin	Cd-045	WT100L-E2141	6030706
		Connector M8, 4-pin	Cd-066	WT100L-E2241	6030707

[1] Object with 90 % reflectance (referred to standard white, DIN 5033)

WL100L

- **Sensor principle:** photoelectric retro-reflective sensor
- **Detection principle:** standard optics
- **Light spot size (distance):** Ø 12 mm (10 m)
- **Switching mode:** light/dark-switching
- **Adjustment:** potentiometer, 270 °
- **Items supplied:** stainless steel mounting bracket (1.4301/304) BEF-W100-A, Reflector P250F

Sensing range max. [1]	Output type	Connection	Connection diagram	Model name	Part no.
0.08 m ... 12 m	PNP	Cable, 3-wire, 2 m, PVC	Cd-043	WL100L-F1131	6030708
		Connector M8, 3-pin	Cd-045	WL100L-F2131	6030709
		Connector M8, 4-pin	Cd-066	WL100L-F2231	6030710
	NPN	Cable, 3-wire, 2 m, PVC	Cd-043	WL100L-E1131	6030711
		Connector M8, 3-pin	Cd-045	WL100L-E2131	6030712
		Connector M8, 4-pin	Cd-066	WL100L-E2231	6030713

[1] P250F.

WS/WE100L

- **Sensor principle:** through-beam photoelectric sensor
- **Light spot size (distance):** Ø 30 mm (30 m)
- **Switching mode:** light/dark-switching
- **Adjustment:** potentiometer, 270 °
- **Items supplied:** 2 Stainless steel mounting brackets (1.4301/304) BEF-W100-A

Sensing range max.	Output type	Connection	Connection diagram	Model name	Part no.
0 m ... 35 m	PNP	Cable, 3-wire, 2 m, PVC	Cd-047	WS/WE100L-F1131	6030714
		Connector M8, 3-pin	Cd-051	WS/WE100L-F2131	6030715
		Connector M8, 4-pin	Cd-071	WS/WE100L-F2231	6030716
	NPN	Cable, 3-wire, 2 m, PVC	Cd-047	WS/WE100L-E1131	6030717
		Connector M8, 3-pin	Cd-051	WS/WE100L-E2131	6030718
		Connector M8, 4-pin	Cd-071	WS/WE100L-E2231	6030719

Dimensional drawings

Dimensions in mm (inch)

WT100L, WL100L

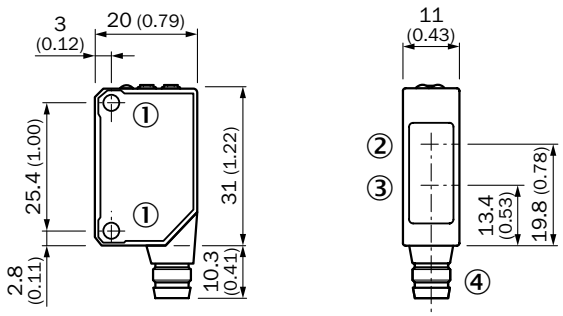

① Threaded mounting hole M3
② Center of optical axis, receiver
③ Center of optical axis, sender
④ Connection

WS/WE100L

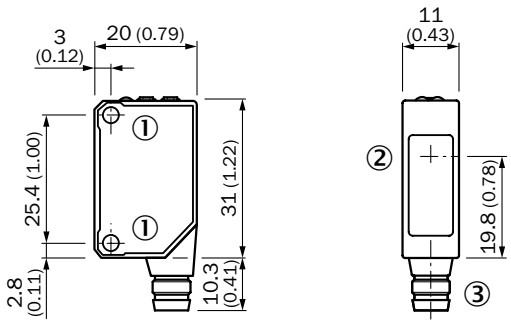

① Threaded mounting hole M3
② Center of optical axis
③ Connection

Adjustments

WT100L, WL100L

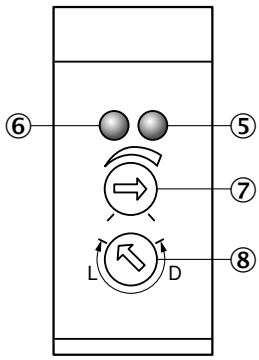

⑤ Orange LED indicator: switching output active
⑥ LED signal strength indicator green:power on
⑦ Sensing range (WT) / sensitivity (WL) adjustment: potentiometer, 270°
⑧ Light/ dark rotary switch: L = light switching, D = dark switching

WS/WE100L

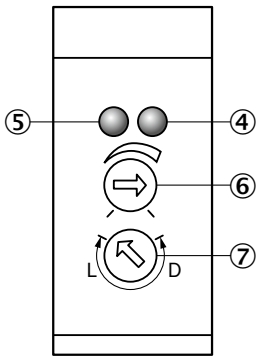

④ Orange LED indicator: switching output active
⑤ LED signal strength indicator green:power on
⑥ Sensitivity adjustment 270°
⑦ Light/ dark rotary switch: L = light switching, D = dark switching

Characteristic curves

Black-white shift

WT100L

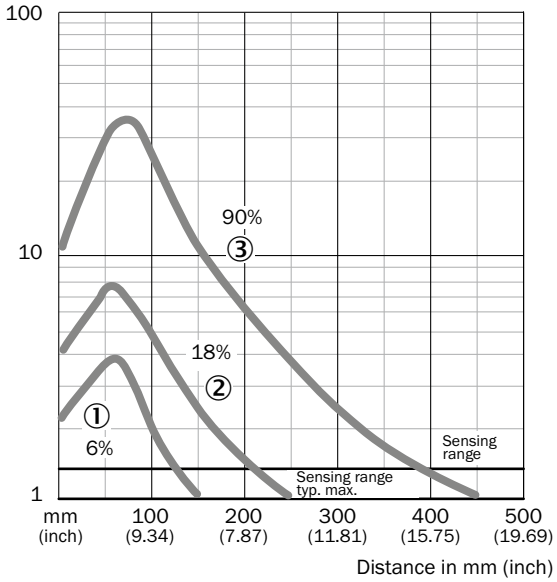

① Sensing range on black, 6 % remission
② Sensing range on gray, 18 % remission
③ Sensing range on white, 90 % remission

F

Operating reserve

WL100L

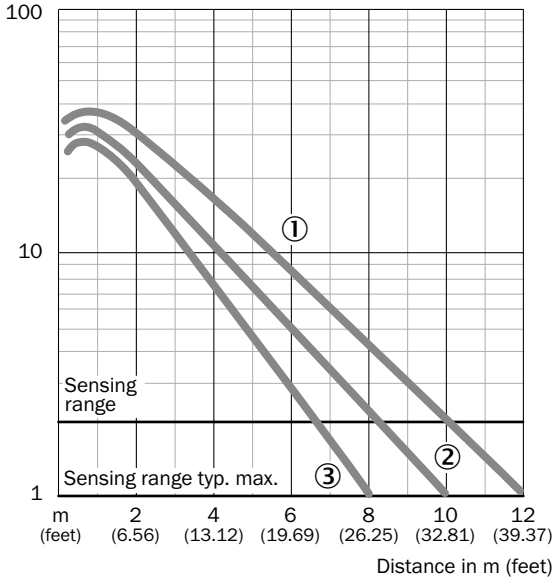

WS/WE100L

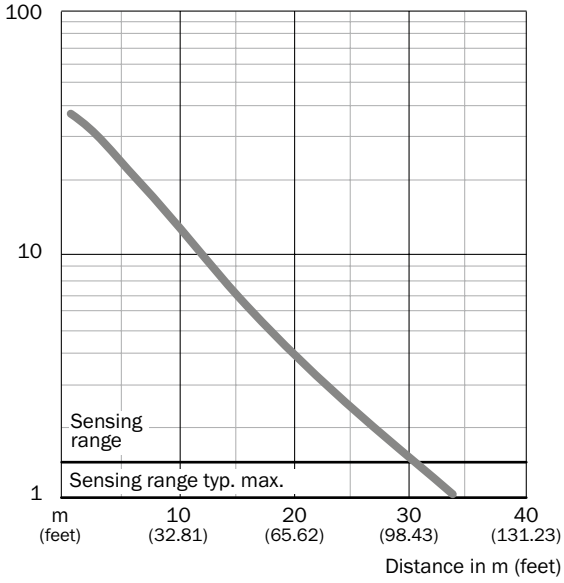

① P250F
② PL20F
③ PL10F

Bar diagrams

WT100L

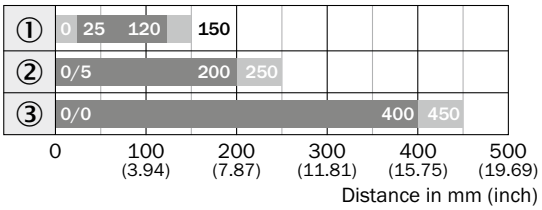

Sensing range Sensing range max.

① Sensing range on black, 6 % remission
② Sensing range on gray, 18 % remission
③ Sensing range on white, 90 % remission

WL100L

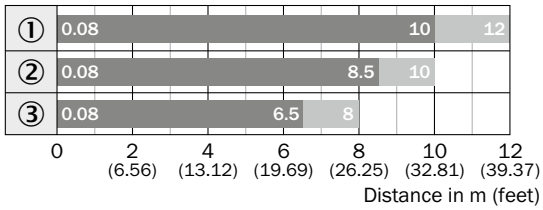

Sensing range Sensing range max.

WS/WE100L

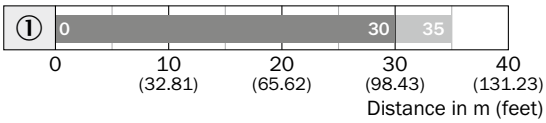

Sensing range Sensing range typ. max.

Light spot diameter

WT100L

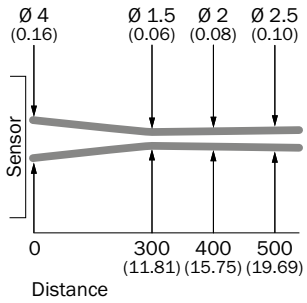

All dimensions in mm (inch)

WL100L

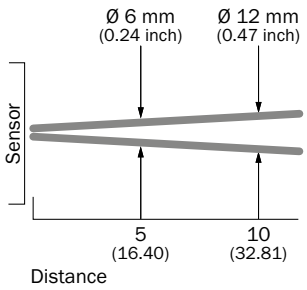

All dimensions in m (feet)

WS/WE100L

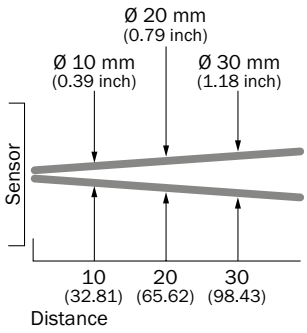

All dimensions in m (feet)

Connection diagram

Cd-043

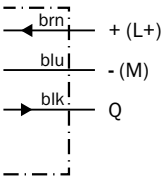

Cd-045

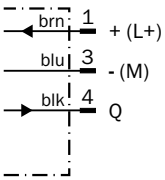

Cd-047

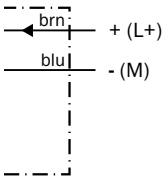

F

Cd-051

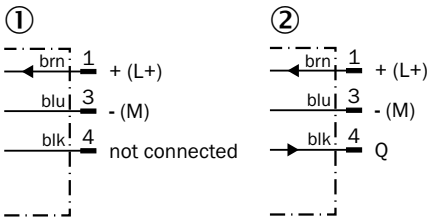

① Sender
② Receiver

Cd-066

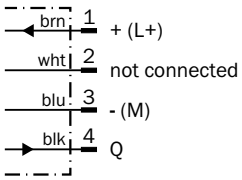

Cd-071

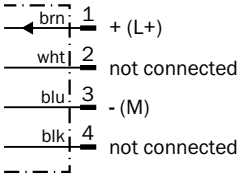

Recommended accessories

Mounting brackets/plates

Mounting brackets

Figure	Material	Description	Model name	Part no.
	Stainless steel	Mounting bracket for wall mounting	BEF-W100-A	5311520
	Steel, zinc coated	Mounting bracket for floor mounting	BEF-W100-B	5311521

F

Plug connectors and cables

Connecting cable (female connector-open), PVC

- **Cable material:** PVC
- **Connector material:** TPU

Figure	Connection type head A	Connection type head B	Connecting cable	Enclosure rating	Model name	Part no.
	Female connector, M8, 3-pin, straight	Cable, open conductor heads	2 m, 3-wire	IP 67	DOL-0803-G02M	6010785
			5 m, 3-wire	IP 67	DOL-0803-G05M	6022009
	Female connector, M8, 3-pin, angled	Cable, open conductor heads	2 m, 3-wire	IP 67	DOL-0803-W02M	6008489
			5 m, 3-wire	IP 67	DOL-0803-W05M	6022010
	Female connector, M8, 4-pin, straight	Cable, open conductor heads	2 m, 4-wire	IP 67	DOL-0804-G02M	6009870
			5 m, 4-wire	IP 67	DOL-0804-G05M	6009872
	Female connector, M8, 4-pin, angled	Cable, open conductor heads	2 m, 4-wire	IP 67	DOL-0804-W02M	6009871
			5 m, 4-wire	IP 67	DOL-0804-W05M	6009873

Universal bar clamp systems

Figure	Material	Description	Model name	Part no.
	Zinc plated steel (sheet), Diecast zinc (clamp)	Plate N08 for universal clamp bracket	BEF-KHS-N08	2051607

Device protection (mechanical)

Protective housing/tubes

Figure	Material	Description	Model name	Part no.
	Stainless steel 1.4571	Safety bracket for floor mounting	BEF-SW-W4S	2051497

Reflectors

Angular

Figure	Material	Description	Model name	Part no.
	PMMA/ABS	Rectangular, screw connection, 80 mm x 80 mm	PL80A	1003865

Fine triple reflectors

Figure	Material	Description	Model name	Part no.
	PMMA/ABS	Fine triple, screw connection, suitable for laser sensors, 47 mm x 47 mm	P250F	5308843
		Fine triple, self-adhesive, suitable for laser sensors, Ø 23 mm	P25F-1	5319385
		Reflector with microprismatic reflex tape REF-AC1000, suitable for laser sensors, see alignment note, 23 mm x 23 mm	P41F	5315128
		Fine triple, screw connection, suitable for laser sensors, 18 mm x 18 mm	PL10F	5311210
		Fine triple, screw connection, suitable for laser sensors, 38 mm x 16 mm	PL20F	5308844
		Fine triple, screw connection, suitable for laser sensors, 56 mm x 28 mm	PL30F	5326523
		Fine triple, screw connection, suitable for laser sensors, 76 mm x 45 mm	PL81-1F	5325060

Reflective tape

Figure	Description	Model name	Part no.
	Suitable for laser sensors, self-adhesive, cut, see alignment note, 56.3 mm x 56.3 mm	REF-AC1000-56	4063030

→ **For additional accessories, please see page L-861**

F

G

The packaging specialists – photoelectric sensors to optimize your applications

From harsh environments in the food and beverage industry to high-speed cigarette manufacturing, sensors are exposed to a variety of challenges. Due to high-performance electronics and sophisticated optics, small photoelectric sensors from SICK detect all objects, even under difficult conditions. The latest technologies, such as PinPoint LED, custom ASICs, µC or IO-Link provide outstanding performance in modern, functional housings.

Your benefits

- Outstanding sensor performance in small housings
- Reliable object detection of difficult targets using best-in-class technology
- A wide range of different sensor housings and connection systems ensures optimal integration of sensors in the system
- Many options for protective housings – super tough VISTAL™, metal or highly resistant plastic, ensures that the sensor can be installed without damage
- Wide range of accessories ensures easy installation, quick commissioning and maximum sensor performance for varying application needs

G

Small photoelectric sensors

Overview of small photoelectric sensors

	Housing properties									Sensor properties											
	Material					Enclosure rating															
	Plastic	Metal	VISTAL™	Explosion protection housing	PTFE coating	IP 65	IP 66	IP 67	IP 69K	Photoelectric proximity sensor	Energetic	Background suppression	Foreground suppression	Photoelectric retro-reflective sensor	Autocollimation	Standard optics	Through-beam photoelectric sensor	IO-Link	AutoAdapt	Switching frequency ≥ 2 kHz	AC/DC
G10																					
G10 NEW	■							■		■	■	■		■		■	■				■
W9																					
W9-3			■				■	■	■	■		■		■	■		■				
W9-3 Glass			■				■	■	■					■	■				■		
W9L-3 NEW			■				■	■	■	■		■		■	■		■				
W9LG-3 NEW			■				■	■	■					■	■				■		
W11																					
W11-2	■						■	■	■	■	■	■	■	■		■	■				
W11G-2	■						■	■	■					■	■						
W12																					
W12-2 Laser		■			■			■	■	■		■		■	■		■			■	
W12G		■			■		■	■	■					■	■			■	■		
W12-3		■			■		■	■	■	■		■	■	■	■		■	■			
W14																					
W14-2	■							■		■	■	■		■		■	■				
W18																					
W18-3	■			■				■		■		■		■	■		■				

G

	Optical properties							Special applications									Page
	Type of light/Light sender				Light spot geom-etry	Technology											
	LED infrared light	LED red light	★ Red laser light	★ PinPoint LED red light	★ Line-shaped light spot	★ Focused optics	SIRIC®	Hygienic and washdown zones	Detecting transparent objects	Detecting perforated objects	Detecting small objects	Detecting uneven, shiny objects	Detecting objects wrapped in film	Detecting objects with posi-tion tolerances	Detecting high-speed objects	Explosive areas	
	■			■					■				■				G-430
	■			■		■	■	■			■						G-448
				■			■	■	■								G-462
			■				■	■			■						G-470
			■				■	■	■		■						G-484
				■			■						■				G-492
		■					■		■								G-504
			■				■	■			■				■		G-510
	■	■		■			■	■	■								G-520
	■	■		■	■	■	■	■		■	■	■		■			G-528
	■	■		■	■		■			■		■	■	■			G-544
	■	■					■									■	G-556

G

Photoelectric proximity sensors

	Maximum sensing range	Dimensions (W x H x D)	Page
W12-2 Laser	20 mm ... 200 mm	15.0 mm x 49.0 mm x 41.5 mm	G-510
W9L-3	25 mm ... 400 mm	12.2 mm x 52.2 mm x 23.6 mm	G-470
W12-3	20 mm ... 800 mm	15.6 mm x 48.5 mm x 42.0 mm	G-528
W9-3	20 mm ... 800 mm	12.2 mm x 52.2 mm x 23.6 mm	G-448
W18-3	10 mm ... 1,000 mm	17.6 mm x 75.5 mm x 33.5 mm	G-556
W11-2	20 mm ... 1,100 mm	15.6 mm x 48.5 mm x 42.0 mm	G-492
W14-2	20 mm ... 1,500 mm	17.6 mm x 75.5 mm x 33.5 mm	G-544
G10	20 mm ... 2,000 mm	20 mm x 50 mm x 51.5 mm	G-430

Photoelectric retro-reflective sensors

	Maximum sensing range	Dimensions (W x H x D)	Page
W11G-2	0 m ... 4 m	15.6 mm x 48.5 mm x 42.0 mm	G-504
W12G	0 m ... 4 m	15.6 mm x 48.5 mm x 42.0 mm	G-520
W9LG-3	0 m ... 4.5 m	12.2 mm x 52.2 mm x 23.6 mm	G-484
W9-3	0 m ... 5 m	12.2 mm x 52.2 mm x 23.6 mm	G-448
W9-3 Glass	0 m ... 5 m	12.2 mm x 52.2 mm x 23.6 mm	G-462
W12-3	0 m ... 7 m	15.6 mm x 48.5 mm x 42.0 mm	G-528
W18-3	0 m ... 7 m	17.6 mm x 75.5 mm x 33.5 mm	G-556
W11-2	0.15 m ... 10 m	15.6 mm x 48.5 mm x 42.0 mm	G-492
W9L-3	0 m ... 12 m	12.2 mm x 52.2 mm x 23.6 mm	G-470
G10	0.08 m ... 15 m	20 mm x 50 mm x 51.5 mm	G-430
W14-2	0.15 m ... 17 m	17.6 mm x 75.5 mm x 33.5 mm	G-544
W12-2 Laser	0 m ... 18 m	15.0 mm x 49.0 mm x 41.5 mm	G-510

Through-beam photoelectric sensors

	Maximum sensing range	Dimensions (W x H x D)	Page
W9-3	0 m ... 10 m	12.2 mm x 52.2 mm x 23.6 mm	G-448
W14-2	0 m ... 15 m	17.6 mm x 75.5 mm x 33.5 mm	G-544
W11-2	0 m ... 20 m	15.6 mm x 48.5 mm x 42 mm	G-492
W12-3	0 m ... 20 m	15.6 mm x 48.5 mm x 42 mm	G-528
W18-3	0 m ... 20 m	17.6 mm x 75.5 mm x 33.5 mm	G-556
G10	0 m ... 40 m	20 mm x 50 mm x 51.5 mm	G-430
W9L-3	0 m ... 60 m	12.2 mm x 52.2 mm x 23.6 mm	G-470
W12-2 Laser	0 m ... 80 m	15 mm x 49 mm x 41.5 mm	G-510

G

Product family overview

				
	G10	**W9-3**	**W9-3 Glass**	
	Fast, reliable and robust	High-performance sensors in a rugged VISTAL™ housing	High-performance sensors for clear material detection in a rugged VISTAL™ housing	
Tecnical data overview				
Dimensions (W x H x D)	20 mm x 50 mm x 39 mm / 20 mm x 50 mm x 51.5 mm	12,2 mm x 52.2 mm x 23,6 mm	12,2 mm x 52.2 mm x 23.6 mm	
Sensing range max.				
Photoelectric proximity sensor	20 mm ... 2,000 mm	20 mm ... 800 mm	–	
Photoelectric retro-reflective sensor	0.05 m ... 15 m	0 m ... 5 m	0 m ... 5 m	
Through-beam photoelectric sensor	0 m ... 40 m	0 m ... 10 m	–	
Light source	PinPoint LED/LED	PinPoint LED/LED	PinPoint LED	
Type of light	Visible red light/Infrared light	Visible red light/Infrared light	Visible red light	
Enclosure rating	IP 67	IP 66, IP 67, IP 69K	IP 66, IP 67, IP 69K	
Housing material	Plastic	Plastic VISTAL™	Plastic VISTAL™	
At a glance				
	• Maximum optical window surface combined with a small sensor housing • Sensing range up to 1,200 mm with background suppression performance • PinPoint LED with bright and precise light spot • Sensor variants in all major detection principles and with DC or AC/DC power supply • Transistor output or relay output • Latest SICK ASIC chip technology • Rugged sensor housing with metal sleeved mounting holes	• High-performance sensor in ultra-rugged VISTAL™ housing • PinPoint LED for highly visible and precise light spot • Two emitter LEDs for best-in-class background suppression • Variable mounting with M3 or M4 hole pattern • Wide range of connection options	• High-performance sensor in ultra-rugged VISTAL™ housing • Best-in-class optical performance for transparent object detection • Continuous threshold adaption • PinPoint LED for highly visible and precise light spot • Variable mounting with M3 or M4 hole pattern • Wide range of connection options	
Detailed information	➜ G-430	➜ G-448	➜ G-462	

G

			
	W9L-3	**W9LG-3**	**W11-2**
	Laser precision in a rugged VISTAL™ housing	Laser precision in a rugged VISTAL™ housing for clear material detection	High-performance photoelectric sensors with application flexibility in industrial environments
	12,2 mm x 52.2 mm x 23.6 mm	12.2 mm x 52.2 mm x 23.6 mm	15.6 mm x 48.5 mm x 42 mm
	25 mm ... 400 mm	–	20 mm ... 1,100 mm
	0 m ... 12 m	0 m ... 4.5 m	0.05 m ... 10 m
	0 m ... 60 m	–	0 m ... 20 m
	Laser	Laser	PinPoint LED/LED
	Visible red light	Visible red light	Visible red light
	IP 66, IP 67, IP 69K	IP 66, IP 67, IP 69K	IP 66, IP 67, IP 69K
	Plastic VISTAL™	Plastic VISTAL™	Plastic
	• Tough VISTAL™ housing • Precise laser light spot • Photoelectric proximity sensor in laser classes 1 and 2 • Photoelectric retro-reflective sensor with autocollimation optics and polarizing filter; models available for clear material detection • Through-beam photoelectric sensors with sensing ranges of up to 60 m • SIRIC technology • Connections: M8 and M12 plugs, cable as well as cable with plug • M3 and M4 hole pattern	• Tough VISTAL™ housing • Precise laser light spot, laser class 1 • Continuous switching threshold adjustment (CTA) • Autocollimation optics and polarizing filter • Teach-in • SIRIC technology • Connections: M8 and M12 plugs, cable as well as cable with plug • M3 and M4 hole pattern	• Uniform housing, mounting and connection systems • Rugged sensors for industrial use • PinPoint LED technology provides highly visible light spot • Space-saving plastic housing in chemically, thermally or mechanically resistant designs • Dovetail mounting – mounting holes and oblong holes • Highly visible 360° status LEDs
	➜ G-470	➜ G-484	➜ G-492

Product family overview

				
	W11G-2	**W12-2 Laser**	**W12G**	
	Reliable detection of clear material objects – from PET bottles to transparent film	High-performance photoelectric sensor family with laser optics	High-performance detection of transparent objects in metal housing	
Tecnical data overview				
Dimensions (W x H x D)	15.6 mm x 48.5 mm x 42 mm	15 mm x 49 mm x 41.5 mm	15.6 mm x 48.5 mm x 42 mm	
Sensing range max.				
Photoelectric proximity sensor	–	20 mm ... 50 mm 30 mm ... 200 mm	–	
Photoelectric retro-reflective sensor	0 m ... 4 m	0 m ... 18 m	0 m ... 4 m	
Through-beam photoelectric sensor	–	0 m ... 80 m	–	
Light source	LED	Laser	PinPoint LED/LED	
Type of light	Visible red light	Visible red light	Visible red light/Infrared light	
Enclosure rating	IP 66, IP 67, IP 69K	IP 67, IP 69K	IP 66, IP 67, IP 69K	
Housing material	Plastic	Metal/PTFE	Metal/PTFE	
At a glance				
	• Retro-reflective for detection of clear material objects • Rugged housing for industrial use • PinPoint LED technology with a highly visible light spot • Space-saving plastic housing in chemically, thermally or mechanically resistant designs • Dovetail mounting – standard mounting holes and oblong holes • Highly visible 360° status LEDs • Simple sensitivity adjustment via potentiometer	• Best-in-class retro-reflective laser performance in a metal housing • Teflon® coating available • Precise autocollimation optics • Adjustable focus on retro-reflective sensors • High switching frequency of 2.5 kHz • Connection via cable or rotatable connector • Mounting options with through holes, blind holes, oblong holes and dovetail • Laser protection class 1 or 2	• Rugged die-cast zinc housing with optional Teflon® coating • Reliable detection of transparent objects • Precise autocollimation optics • Robust sensors for industrial use • Precise PinPoint LED • Dovetail mounting – mounting holes and oblong holes • Highly visible status LEDs • Flexible sensor settings, monitoring, advanced diagnostics, and visualization thanks to IO-Link	
Detailed information	➜ G-504	➜ G-510	➜ G-520	

G

		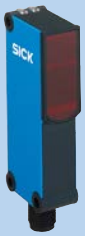	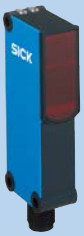
	W12-3	**W14-2**	**W18-3**
	Rugged metal housing provides exceptional performance in demanding applications	Cost-effective photoelectric sensors for demanding applications	Reliable object detection for demanding applications
	15.6 mm x 48.5 mm x 42 mm	17.6 mm x 75.5 mm x 33.5 mm	17.6 mm x 75.5 mm x 33.5 mm
	20 mm ... 800 mm	20 mm ... 1,500 mm	10 mm ... 1,000 mm
	0 m ... 7 m	0.15 m ... 17 m 0.5 m ... 5 m	0 m ... 7 m
	0 m ... 20 m	0 m ... 15 m	0 m ... 20 m
	PinPoint-LED/LED	PinPoint-LED/LED	LED
	Visible red light/Infrared light	Visible red light/Infrared light	Visible red light/Infrared light
	IP 66, IP 67, IP 69K	IP 67	IP 65 / IP67
	Metal/PTFE	Plastic	Plastic
	• Best-in-class optical performance due to superior OES technology • Autocollimation with retro-reflective sensors • Background and foreground suppression with second emitter LED on proximity sensors • Highly visible, precise light spot and high-energy IR transmitters • Rugged die-cast zinc housing, optional with Teflon® coating • Mounting options with through holes, base blind holes, oblong through holes and dovetail • Flexible sensor settings, monitoring, advanced diagnostics, and visualization thanks to IO-Link	• Outstanding background suppression with OES3 technology • Highly visible and precise light spot due to PinPoint LED in selected products • Slim, durable plastic housing • Complete sensor family with proximity, retro-reflective and through-beam variants	• Best-in-class optical performance due to superior OES technology • Autocollimation optics • Background suppression with second sender LED • Slim, durable plastic housing • Operation via double teach-in push-button or potentiometer • Wide variety of options for operation, connection, and optics
	➜ G-528	➜ G-544	➜ G-556

G

Powerful detection, smart installation – down to the last detail

G

Product description

One thing is for sure – thanks to Q-Lock, G10 sensors are mounted lightning fast, connected in the flick of a wrist, and get your line up and running within seconds! Tick, tock, done. Even in large-scale systems. The hawk's-eye of the G10 makes no compromises and detects exactly what it's meant to see, without being distracted by dirt, grime or optical reflections. Always focused: Its acute optics increases productivity while the Q-Lock allows systems being set-up faster and more efficiently than ever before. All this at a price that is as sharply calculated as its vision. Count on it!

At a glance

- Maximum optical window surface combined with a small sensor housing
- Sensing range up to 1,200 mm with background suppression performance
- PinPoint LED with bright and precise light spot
- Sensor variants in all major detection principles and with DC or AC/DC power supply
- Transistor output or relay output
- Latest SICK ASIC chip technology
- Rugged sensor housing with metal sleeved mounting holes

Your benefits

- G10 focuses on the essentials the user really needs – without compromising quality, reliability or performance
- One sensor family serves all standard industrial and domestic applications
- Reliable object detection and long scanning ranges thanks to large optics and SICK ASIC technology
- Easy and fast sensor alignment due to small and highly visible PinPoint light spot
- Insensitive to dust and dirt on front lens or reflector
- Clever accessories reduce installation effort and safe time

Additional information

→ **www.mysick.com/en/G10**

For more information, just enter the link or scan the QR code and get direct access to technical data, CAD design models, operating instructions, software, application examples and much more.

8015327/2014-02-08
Subject to change without notice

Detailed technical data

Features

	GTB10	GTE10	GL10	GL10G	GSE10
Sensor principle	Photoelectric proximity sensor		Photoelectric retro-reflective sensor		Through-beam photoelectric sensor
Detection principle	Background suppression	Energetic	Standard optics		–
Dimensions (W x H x D)					
DC	20 mm x 50 mm x 39 mm				
AC/DC	20 mm x 50 mm x 51.5 mm				
Housing design (light emission)	Rectangular				
Sensing range max.	20 mm ... 1,200 mm [1] (depending on type)	20 mm ... 2,000 mm [1] (depending on type)	0.05 m ... 15 m [2] (depending on type)	0.05 m ... 12 m [2]	0 m ... 40 m
Sensing range	–	40 mm ... 1,500 mm [1] (depending on type)	0.08 m ... 12 m [2] (depending on type)	0.03 m ... 9.5 m [2]	0 m ... 35 m
Type of light	Visible red light/Infrared light (depending on type)		Visible red light		Visible red light/Infrared light (depending on type)
Light source [3]	PinPoint LED/LED (depending on type)		PinPoint LED		PinPoint LED /LED (depending on type)
Wave length					
Visible red light	625 nm				
Infrared light	850 nm		–		850 nm
Adjustment	Potentiometer, 5 turns	Potentiometer, 270 °	Potentiometer, 270 ° (depending on type)		
Special feature	–			Clear material detection	–

[1] Object with 90 % reflectance (referred to standard white, DIN 5033)
[2] PL80A.
[3] Average service life of 100,000 h at T_A = +25 °C.

Mechanics/electronics

	GTB10	GTE10	GL10	GL10G	GSE10
Supply voltage					
DC [1]	10 V DC ... 30 V DC				
AC/DC [2]	24 V AC/DC ... 240 V AC/DC			–	24 V AC/DC ... 240 V AC/DC
Ripple [3]	± 5 V_{pp}				
Power consumption [4]					
DC	≤ 30 mA				
Current consumption					
AC/DC	≤ 0.6 VA			–	≤ 0.6 VA
Output type					
DC	PNP Open collector/NPN Open collector (typabhängig)				
AC/DC	Relais, SPDT, electrically isolated [5]				
Switching mode					
DC	Light/dark-switching (selectable via light/dark selector)				

	GTB10	GTE10	GL10	GL10G	GSE10
Switching mode selector	Selectable via light/dark selector				
Output current $I_{max.}$	≤ 100 mA				
DC	≤ 100 mA				
Switching load max. (current/voltage)					
AC/DC	0,11 A (250 V DC)/3 A (30 V DC) 3 A (250 V AC)			–	0,11 A (250 V DC)/3 A (30 V DC)/ 3 A (250 V AC)
Response time					
DC [6]	≤ 500 µs			≤ 500 µs/≤ 1 ms	≤ 500 µs
AC/DC	≤ 10 ms			–	≤ 10 ms
Switching frequency [7]					
DC	1,000 Hz			1,000 Hz/500 Hz	1,000 Hz
AC/DC	20 Hz			–	20 Hz
Connection type	Cable, 2 m [8]/Male connector, M12 (depending on type)				
Circuit protection					
DC	A [9], B [10], D [11]				
AC/DC	A [9], C [12]				
Protection class					
DC	III				
AC/DC	II				
Polarisation filter	–		✔		–
Interference emission [13]					
AC/DC	EN 61000-6-3 (2011-09)				
Housing material	ABS/PMMA				
Enclosure rating	IP 67				
Relay switching cycles min.					
AC/DC	100.000 cycles (3 A)				
Usage category					
AC/DC	AC-15, DC-13, according to EN 60947-1				
EMC	EN 60947-5-2				
Test input					
DC	–				Sender OFF at "Test" 0 V
Ambient operating temperature	–30 °C ... +60 °C				
Ambient storage temperature	–40 °C ... +70 °C				
Weight					
Connector M12, 4-pin	Approx. 35 g				Approx. 70 g
Cable, 3-wire	Approx. 90 g				Approx. 180 g
Cable, 5-wire	Approx. 115 g			–	Approx. 230 g

[1] Limit values, operation in short-circuit protected network max. 8 A.
[2] +- 10 %.
[3] May not exceed or fall short of V_S tolerances.
[4] Without load.
[5] Provide suitable spark suppression for inductive or capacitive loads.
[6] Signal transit time with resistive load.
[7] With light/dark ratio 1:1.
[8] Do not bend below 0 °C.
[9] A = V_S connections reverse-polarity protected.
[10] B = inputs and output reverse-polarity protected.
[11] D = outputs overcurrent and short-circuit protected.
[12] C = interference suppression.
[13] In the case of a DC supply (ref. to EN 61000-6-3) the length of cable between the supply source and the sensor must be < 30 m.

Ordering information

Other models available at www.mysick.com/en/G10

GTB10, DC

- **Sensor principle:** photoelectric proximity sensor
- **Detection principle:** background suppression
- **Type of light:** visible red light
- **Supply voltage:** 10 V DC ... 30 V DC
- **Switching frequency:** 1,000 Hz
- **Switching mode:** light/dark-switching

Sensing range max. [1]	Light spot size (distance)	Output type	Adjustment	Connection	Connection diagram	Items supplied	Model name	Part no.
20 mm ... 950 mm	Ø 8 mm (700 mm)	PNP	Adjustable, potentiometer, 5 turns	Cable, 3-wire, 2 m, PVC	Cd-044	–	GTB10-P1211	1065854
						Mounting bracket BEF-G10DC01	GTB10-P1212	1065856
				Connector M12, 4-pin	Cd-066	–	GTB10-P4211	1064694
						Mounting bracket BEF-G10DC01	GTB10-P4212	1065857
		NPN	Adjustable, potentiometer, 5 turns	Cable, 3-wire, 2 m, PVC	Cd-044	–	GTB10-N1211	1065858
						Mounting bracket BEF-G10DC01	GTB10-N1212	1065859
				Connector M12, 4-pin	Cd-066	–	GTB10-N4211	1065860
						Mounting bracket BEF-G10DC01	GTB10-N4212	1065861

[1] Object with 90 % reflectance (referred to standard white, DIN 5033)

G

GTB10, AC/DC

- **Sensor principle:** photoelectric proximity sensor
- **Detection principle:** background suppression
- **Output type:** relay
- **Supply voltage:** 10 V DC ... 30 V DC
- **Switching frequency:** 20 Hz
- **Switching mode:** light/dark-switching

Sensing range max. [1]	Light spot size (distance)	Type of light	Adjustment	Connection	Connection diagram	Items supplied	Model name	Part no.
20 mm ... 950 mm	Ø 8 mm (700 mm)	Visible red light	Adjustable, potentiometer, 5 turns	Cable, 5-wire, 2 m, PVC	Cd-163	–	GTB10-R3811	1064686
						Mounting bracket BEF-G10UC01	GTB10-R3812	1065862
20 mm ... 1,200 mm	Ø 22 mm (700 mm)	Infrared light	Adjustable, potentiometer, 5 turns	Cable, 5-wire, 2 m, PVC	Cd-163	–	GTB10-R3821	1065863
						Mounting bracket BEF-G10UC01	GTB10-R3822	1065864

[1] Object with 90 % reflectance (referred to standard white, DIN 5033)

GTE10, DC

- **Sensor principle:** photoelectric proximity sensor
- **Detection principle:** energetic
- **Type of light:** visible red light
- **Supply voltage:** 10 V DC ... 30 V DC
- **Switching frequency:** 1,000 Hz
- **Switching mode:** light/dark-switching

Sensing range max. [1]	Light spot size (distance)	Output type	Adjustment	Connection	Connection diagram	Items supplied	Model name	Part no.
20 mm ... 1,300 mm	Ø 28 mm (1,400 mm)	PNP	Adjustable, potentiometer, 270 °	Connector M12, 4-pin	Cd-066	–	GTE10-P4211	1064697
						Mounting bracket BEF-G10DC01	GTE10-P4212	1065867
				Cable, 3-wire, 2 m, PVC	Cd-044	–	GTE10-P1211	1065865
						Mounting bracket BEF-G10DC01	GTE10-P1212	1065866
		NPN	Adjustable, potentiometer, 270 °	Cable, 3-wire, 2 m, PVC	Cd-044	–	GTE10-N1211	1065868
						Mounting bracket BEF-G10DC01	GTE10-N1212	1065869
				Connector M12, 4-pin	Cd-066	–	GTE10-N4211	1065871
						Mounting bracket BEF-G10DC01	GTE10-N4212	1065872

[1] Object with 90 % reflectance (referred to standard white, DIN 5033)

GTE10, AC/DC

G

- **Sensor principle:** photoelectric proximity sensor
- **Detection principle:** energetic
- **Output type:** relay
- **Supply voltage:** 10 V DC ... 30 V DC
- **Switching frequency:** 20 Hz
- **Switching mode:** –

Sensing range max. [1]	Light spot size (distance)	Type of light	Adjustment	Connection	Connection diagram	Items supplied	Model name	Part no.
20 mm ... 1,300 mm	Ø 28 mm (1,400 mm)	Visible red light	Adjustable, potentiometer, 270 °	Cable, 5-wire, 2 m, PVC	Cd-163	–	GTE10-R3811	1064688
						Mounting bracket BEF-G10UC01	GTE10-R3812	1065873
20 mm ... 2,000 mm	Ø 57 mm (1,500 mm)	Infrared light	Adjustable, potentiometer, 270 °	Cable, 5-wire, 2 m, PVC	Cd-163	–	GTE10-R3821	1065874
						Mounting bracket BEF-G10UC01	GTE10-R3822	1065875

[1] Object with 90 % reflectance (referred to standard white, DIN 5033)

GL10, DC

- **Sensor principle:** photoelectric retro-reflective sensor
- **Type of light:** visible red light
- **Supply voltage:** 10 V DC ... 30 V DC
- **Switching frequency:** 1,000 Hz
- **Switching mode:** light/dark-switching

Sensing range max.	Light spot size (distance)	Output type	Adjustment	Connection	Connection diagram	Items supplied	Model name	Part no.
0.08 m ... 15 m [1] 0.08 m ... 12 m [2]	Ø 58 mm (5 m)	PNP	No/fix	Cable, 3-wire, 2 m, PVC	Cd-044	–	GL10-P1111	1065876
						Mounting bracket BEF-G10DC01, Reflector P250	GL10-P1112	1065877
				Connector M12, 4-pin	Cd-066	–	GL10-P4111	1065878
						Mounting bracket BEF-G10DC01, Reflector P250	GL10-P4112	1065879
			Adjustable	Cable, 3-wire, 2 m, PVC	Cd-044	–	GL10-P1211	1065885
			Adjustable, potentiometer, 270 °	Cable, 3-wire, 2 m, PVC	Cd-044	Mounting bracket BEF-G10DC01, Reflector P250	GL10-P1212	1065886
				Connector M12, 4-pin	Cd-066	–	GL10-P4211	1065890
						Mounting bracket BEF-G10DC01, Reflector P250	GL10-P4212	1065887
		NPN	No/fix	Cable, 3-wire, 2 m, PVC	Cd-044	–	GL10-N1111	1065880
						Mounting bracket BEF-G10DC01, Reflector P250	GL10-N1112	1065882
				Connector M12, 4-pin	Cd-066	–	GL10-N4111	1065883
						Mounting bracket BEF-G10DC01, Reflector P250	GL10-N4112	1065884
			Adjustable, potentiometer, 270 °	Cable, 3-wire, 2 m, PVC	Cd-044	–	GL10-N1211	1065888
						Mounting bracket BEF-G10DC01, Reflector P250	GL10-N1212	1065889
				Connector M12, 4-pin	Cd-066	–	GL10-N4211	1064700
						Mounting bracket BEF-G10DC01, Reflector P250	GL10-N4212	1065891

[1] PL80A.
[2] P250.

GL10, AC/DC

- **Sensor principle:** photoelectric proximity sensor
- **Output type:** relay
- **Supply voltage:** 10 V DC ... 30 V DC
- **Switching frequency:** 20 Hz
- **Switching mode:** –

Sensing range max.	Light spot size (distance)	Type of light	Adjustment	Connection	Connection diagram	Items supplied	Model name	Part no.
0.08 m ... 15 m [1] 0.08 m ... 12 m [2]	Ø 58 mm (5 m)	Visible red light	No/fix	Cable, 5-wire, 2 m, PVC	Cd-163	–	GL10-R3711	1065896
						Mounting bracket BEF-G10UC01, Reflector P250	GL10-R3712	1065897
			Adjustable, potentiometer, 270 °	Cable, 5-wire, 2 m, PVC	Cd-163	–	GL10-R3811	1064689
						Mounting bracket BEF-G10UC01, Reflector P250	GL10-R3812	1065898

[1] PL80A.
[2] P250.

GL10, detecting objects wrapped in film

- **Sensor principle:** photoelectric retro-reflective sensor
- **Type of light:** visible red light
- **Supply voltage:** 10 V DC ... 30 V DC
- **Switching frequency:** 500 Hz
- **Switching mode:** light-switching

Sensing range max.	Light spot size (distance)	Output type	Adjustment	Connection	Connection diagram	Items supplied	Model name	Part no.
0.15 m ... 12 m [1] 0.15 m ... 10 m [2]	Ø 58 mm (5 m)	PNP	No/fix	Connector M12, 4-pin	Cd-066	–	GL10-P4551	1064702
						Q-Lock mounting system BEF-KHSQ12R01	GL10-P4554	1065893
		NPN		Cable, 3-wire, 2 m, PVC	Cd-044	–	GL10-N1551	1065892

[1] PL80A.
[2] P250.

GL10G, clear material detection

- **Sensor principle:** photoelectric retro-reflective sensor
- **Type of light:** visible red light
- **Supply voltage:** 10 V DC ... 30 V DC
- **Switching frequency:** 500 Hz
- **Switching mode:** light/dark-switching

Sensing range max.	Light spot size (distance)	Output type	Adjustment	Connection	Connection diagram	Items supplied	Model name	Part no.
0.15 m ... 12 m [1] 0.15 m ... 10 m [2]	Ø 58 mm (5 m)	PNP	Adjustable, potentiometer, 270 °	Connector M12, 4-pin	Cd-066	–	GL10G-P4251	1064704
						Mounting bracket BEF-G10DC01, Reflector P250	GL10G-P4252	1065894
		NPN		Cable, 3-wire, 2 m, PVC	Cd-044	–	GL10G-N1251	1064705
						Mounting bracket BEF-G10DC01, Reflector P250	GL10G-N1252	1065895

[1] PL80A.
[2] P250.

G

GSE10, DC

- **Sensor principle:** through-beam photoelectric sensor
- **Type of light:** visible red light
- **Supply voltage:** 10 V DC ... 30 V DC
- **Switching frequency:** 1,000 Hz
- **Switching mode:** light/dark-switching

Sensing range max.	Light spot size (distance)	Type of light	Out-put type	Adjustment	Connection	Connection diagram	Items supplied	Model name	Part no.
0 m ... 40 m	Ø 180 mm (50 m)	Visible red light	PNP	No/fix	Connector M12, 4-pin	Cd-073	–	GSE10-P4111	1065899
							Mounting bracket BEF-G10DC01 (2x)	GSE10-P4112	1065900
				Adjustable, potentiometer, 270 °	Connector M12, 4-pin	Cd-073	–	GSE10-P4211	1064706
							Mounting bracket BEF-G10DC01 (2x)	GSE10-P4212	1065903
			NPN	No/fix	Cable, 3-wire, 2 m, PVC	Cd-061	–	GSE10-N1111	1065901
							Mounting bracket BEF-G10DC01 (2x)	GSE10-N1112	1065902
				Adjustable, potentiometer, 270 °	Cable, 3-wire, 2 m, PVC	Cd-061	–	GSE10-N1211	1065904
							Mounting bracket BEF-G10DC01 (2x)	GSE10-N1212	1065905
		Infra-red light	PNP	Adjustable, potentiometer, 270 °	Connector M12, 4-pin	Cd-073	–	GSE10-P4221	1065906
							Mounting bracket BEF-G10DC01 (2x)	GSE10-P4222	1065907
			NPN	Adjustable, potentiometer, 270 °	Cable, 3-wire, 2 m, PVC	Cd-061	–	GSE10-N1221	1065908
							Mounting bracket BEF-G10DC01 (2x)	GSE10-N1222	1065909

GSE10, AC/DC

- **Sensor principle:** through-beam photoelectric sensor
- **Type of light:** relay
- **Supply voltage:** 10 V DC ... 30 V DC
- **Switching frequency:** 1,000 Hz
- **Switching mode:** –

Sensing range max.	Light spot size (distance)	Type of light	Adjustment	Connection	Connection diagram	Items supplied	Model name	Part no.
0 m ... 40 m	Ø 180 mm (50 m)	Visible red light	No/fix	Cable, 5-wire, 2 m, PVC	Cd-170	–	GSE10-R3711	1065910
						Mounting bracket BEF-G10UC01 (2x)	GSE10-R3712	1065911
			Adjustable, potentiometer, 270 °	Cable, 5-wire, 2 m, PVC	Cd-170	–	GSE10-R3811	1064691
						Mounting bracket BEF-G10UC01 (2x)	GSE10-R3812	1065912
		Infrared light	No/fix	Cable, 5-wire, 2 m, PVC	Cd-170	–	GSE10-R3721	1065913
						Mounting bracket BEF-G10UC01 (2x)	GSE10-R3722	1065914

Dimensional drawings

Dimensions in mm (inch)

GTB10, DC, cable

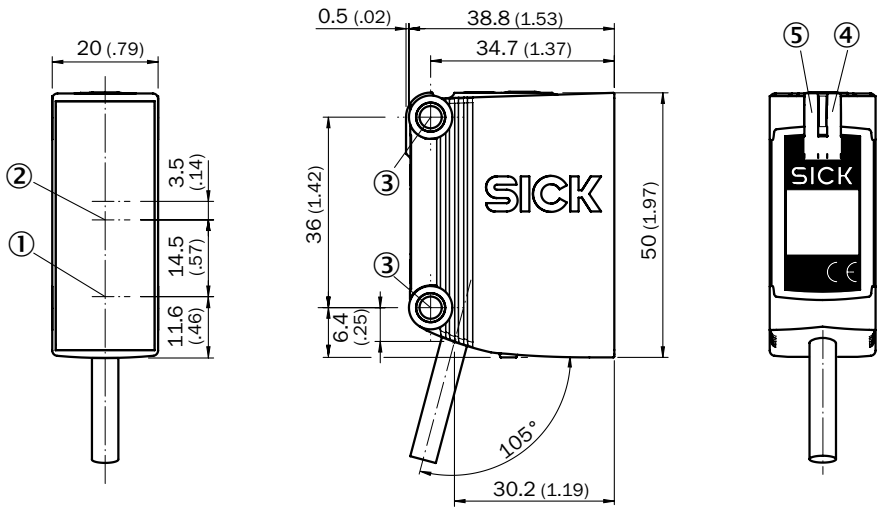

① Center of optical axis, sender
② Center of optical axis, receiver
③ Mounting hole, Ø 4.2 mm
④ LED indicator yellow: Light received
⑤ LED signal strength indicator green:power on

GTB10, DC, connector

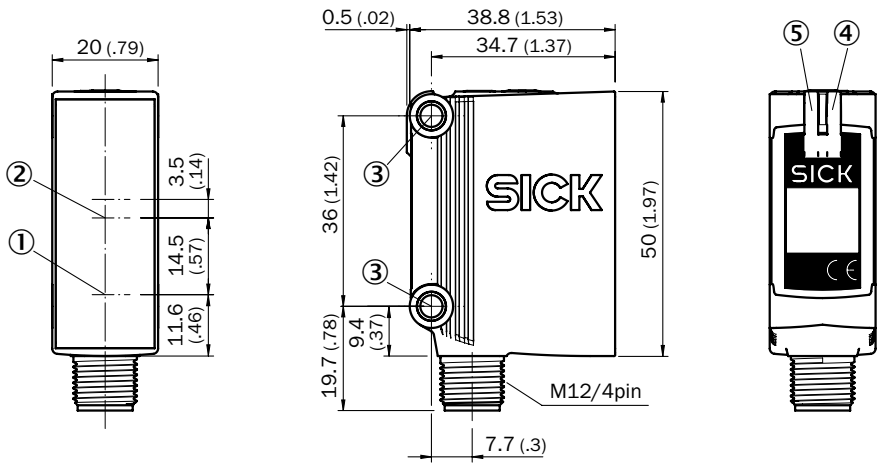

① Center of optical axis, sender
② Center of optical axis, receiver
③ Mounting hole, Ø 4.2 mm
④ LED indicator yellow: Light received
⑤ LED signal strength indicator green:power on

GTB10, AC/DC, cable

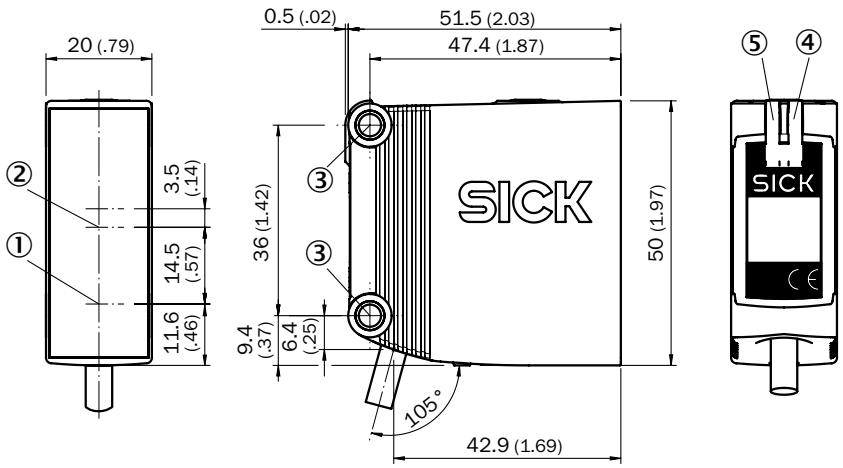

① Center of optical axis, sender
② Center of optical axis, receiver
③ Mounting hole, Ø 4.2 mm
④ LED indicator yellow: Light received
⑤ LED signal strength indicator green:power on

GTE10, GL10, GL10G, DC, connector

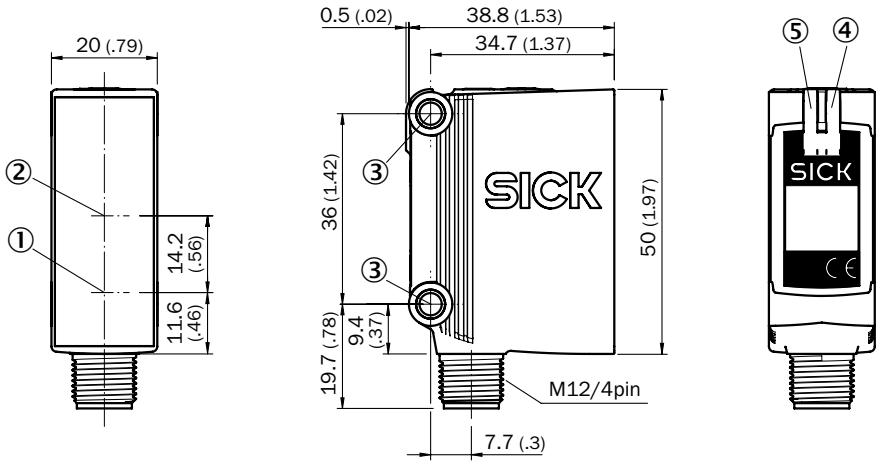

① Center of optical axis, sender
② Center of optical axis, receiver
③ Mounting hole, Ø 4.2 mm
④ LED indicator yellow: Light received
⑤ LED signal strength indicator green:power on

GTE10, GL10, GL10G, DC, cable

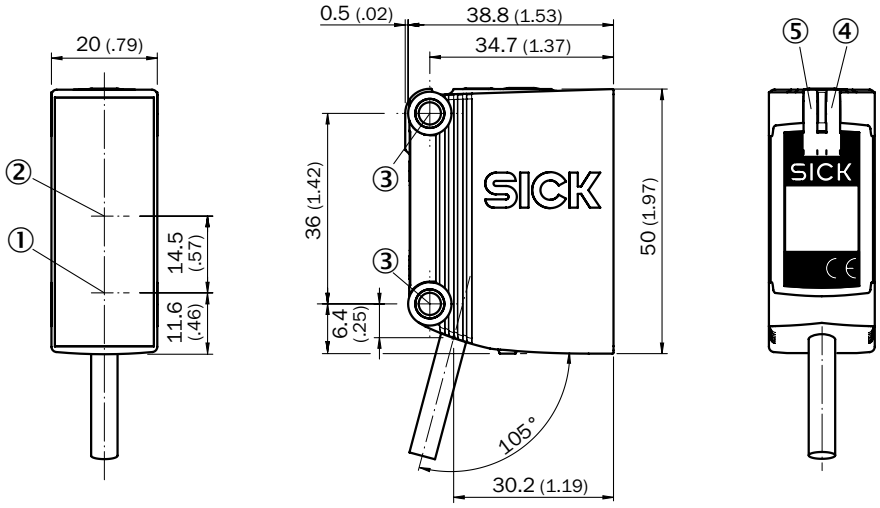

① Center of optical axis, sender
② Center of optical axis, receiver
③ Mounting hole, Ø 4.2 mm
④ LED indicator yellow: Light received
⑤ LED signal strength indicator green:power on

GTE10, GL10, GL10G, AC/DC, cable

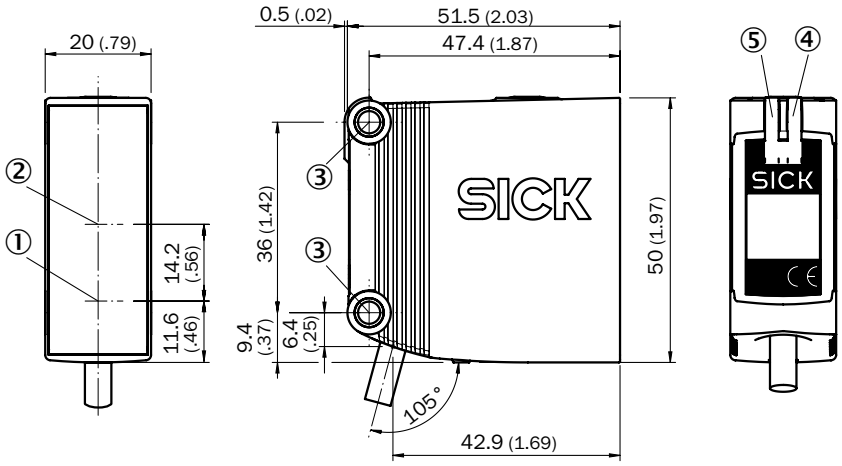

① Center of optical axis, sender
② Center of optical axis, receiver
③ Mounting hole, Ø 4.2 mm
④ LED indicator yellow: Light received
⑤ LED signal strength indicator green:power on

G

GSE10, DC, connector

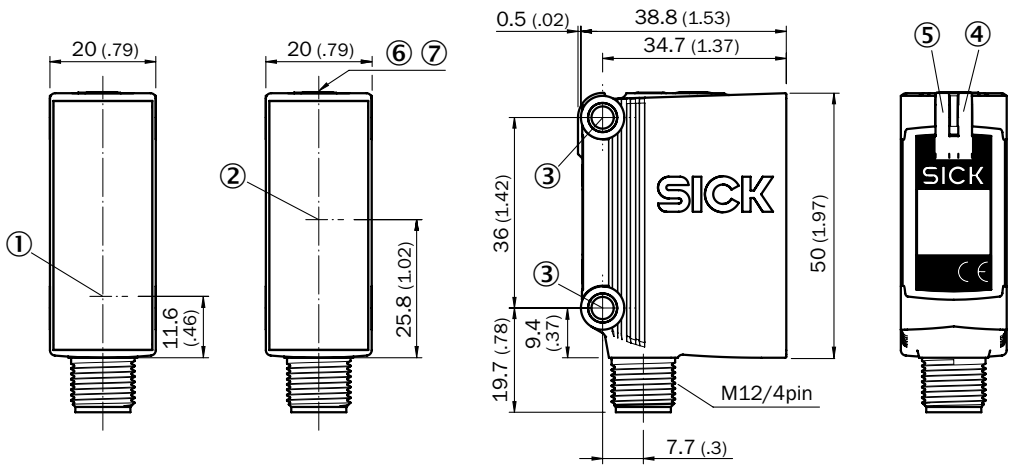

① Center of optical axis, sender
② Center of optical axis, receiver
③ Mounting hole, Ø 4.2 mm
④ LED indicator yellow: Light received
⑤ LED signal strength indicator green:power on

GSE10, DC, cable

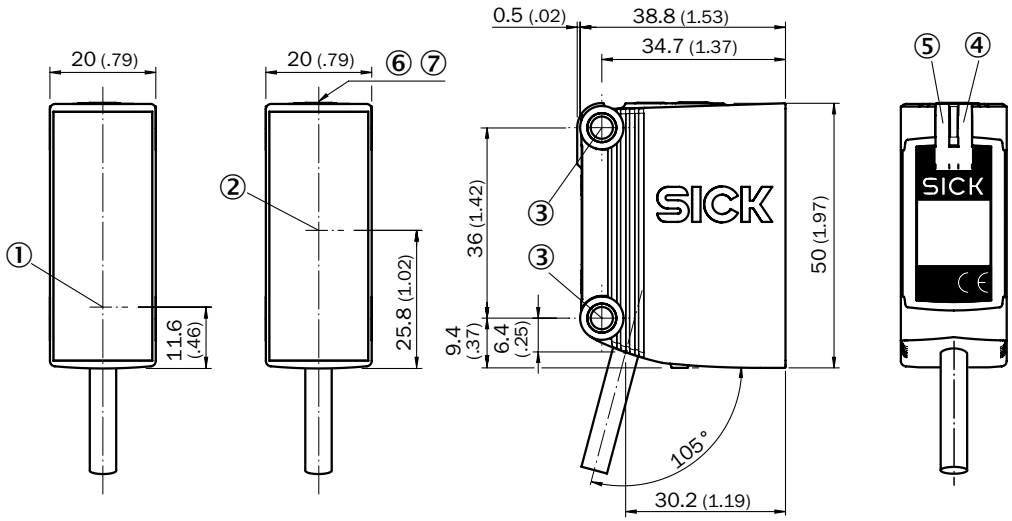

① Center of optical axis, sender
② Center of optical axis, receiver
③ Mounting hole, Ø 4.2 mm
④ LED indicator yellow: Light received
⑤ LED signal strength indicator green:power on

G

GSE10, AC/DC, cable

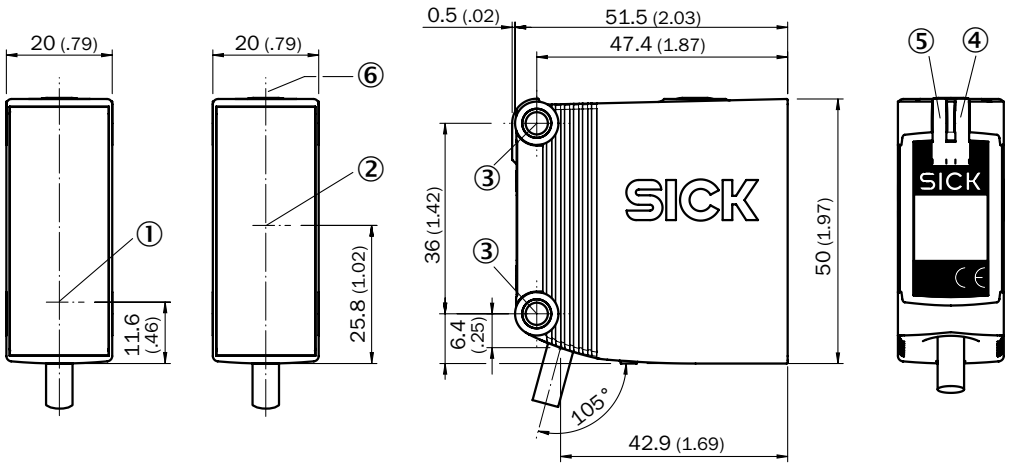

① Center of optical axis, sender
② Center of optical axis, receiver
③ Mounting hole, Ø 4.2 mm
④ LED indicator yellow: Light received
⑤ LED signal strength indicator green:power on

Adjustments

GTB10, GTE10, DC

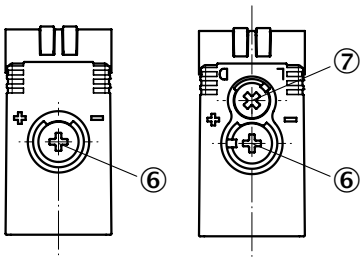

⑥ Sensing range adjustment
⑦ Light/dark selector

GTB10, GTE10, AC/DC

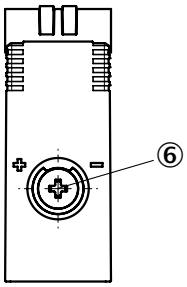

⑥ Sensing range adjustment

GL10, GL10G, GSE10, DC

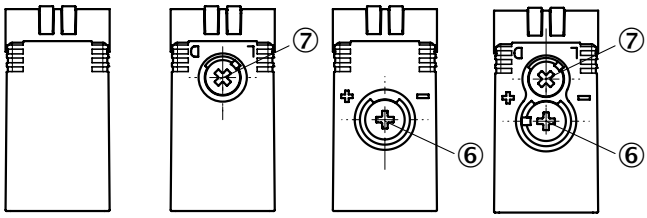

⑥ Sensing range adjustment
⑦ Light/dark selector

GL10, GL10G, GSE10, AC/DC

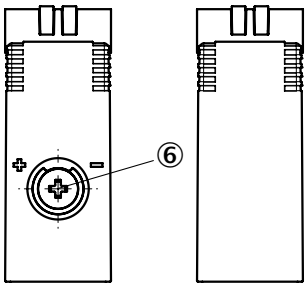

⑥ Sensing range adjustment

Characteristic curves

Black-white shift

GTB10, redlight

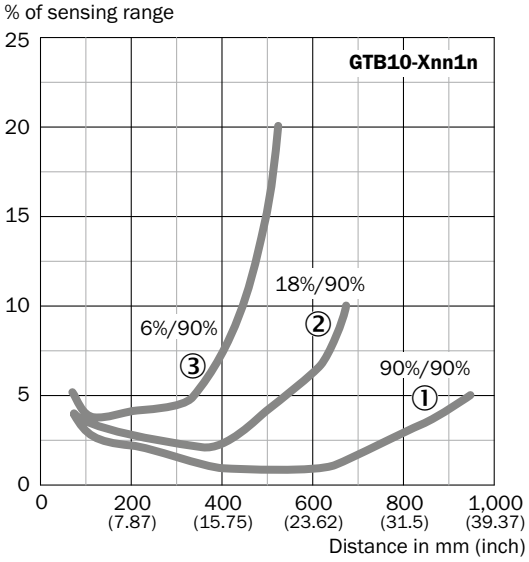

① Sensing range on white, 90 % remission
② Sensing range on gray, 18 % remission
③ Sensing range on black, 6 % remission

GTB10, infrared light

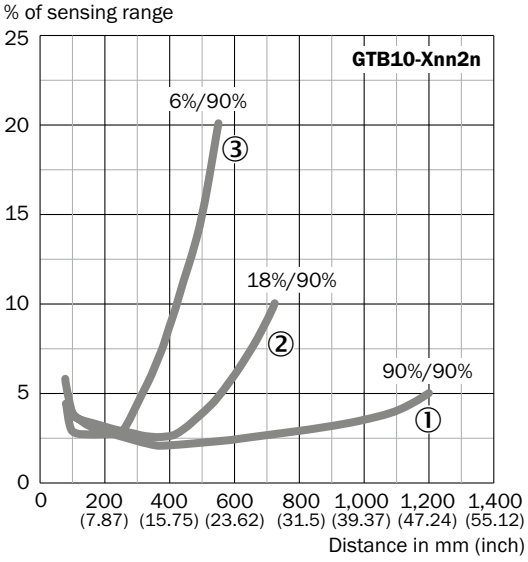

① Sensing range on white, 90 % remission
② Sensing range on gray, 18 % remission
③ Sensing range on black, 6 % remission

GTE10, red light

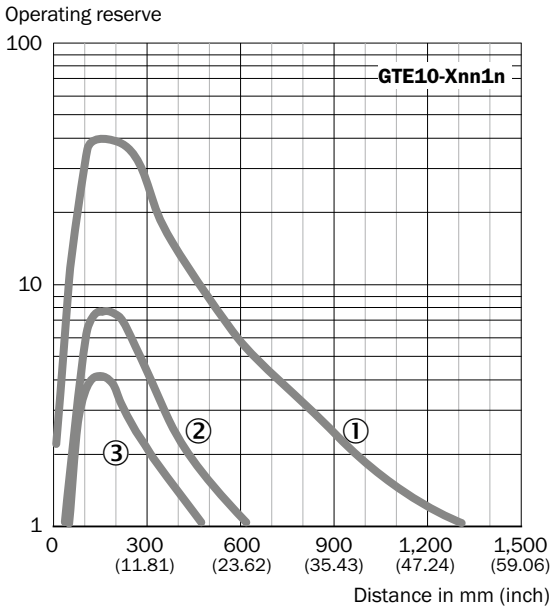

① Sensing range on white, 90 % remission
② Sensing range on gray, 18 % remission
③ Sensing range on black, 6 % remission

GTE10, infrared light

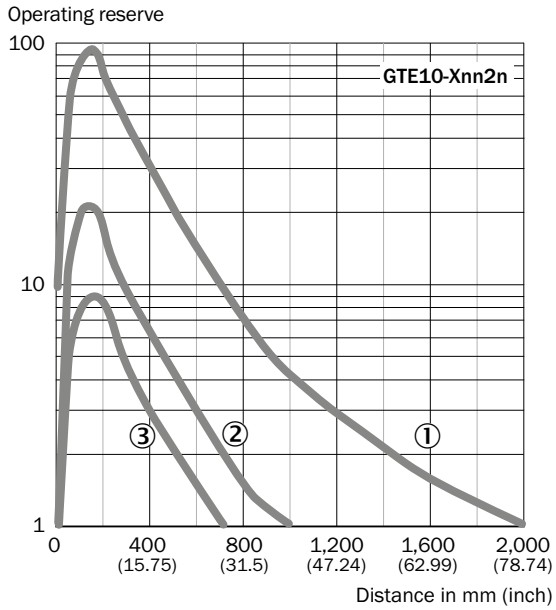

① Sensing range on white, 90 % remission
② Sensing range on gray, 18 % remission
③ Sensing range on black, 6 % remission

Operating reserve

GL10, DC, AC/DC

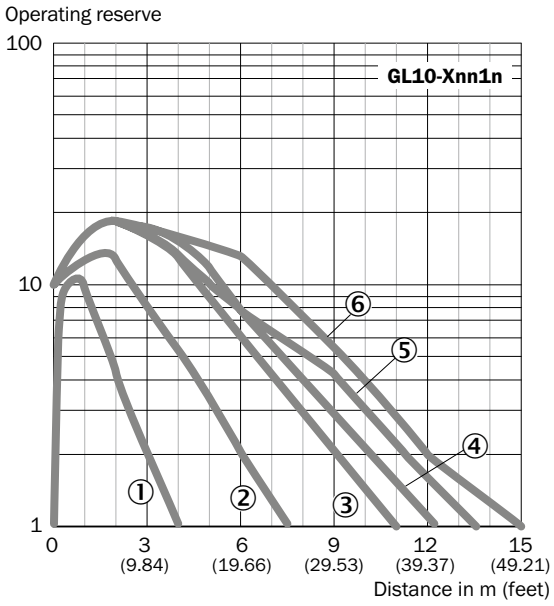

① REF-IRF-56
② PL20A
③ PL30A
④ P250
⑤ PL40A
⑥ PL80A

GL10 logistics, DC

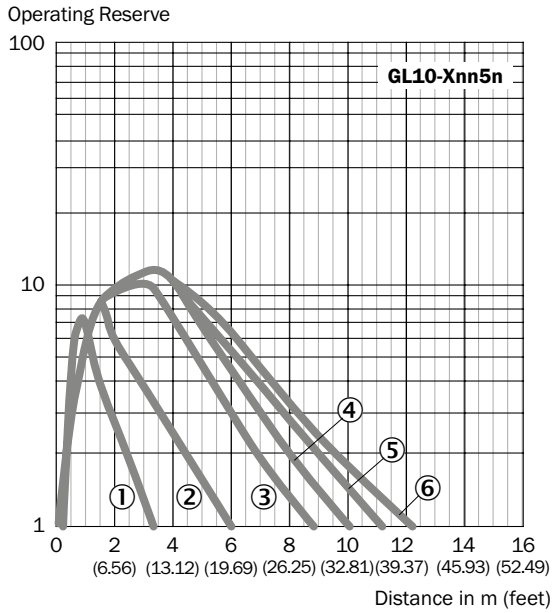

① REF-IRF-56
② PL20A
③ PL30A
④ P250
⑤ PL40A
⑥ PL80A

GSE10, red light

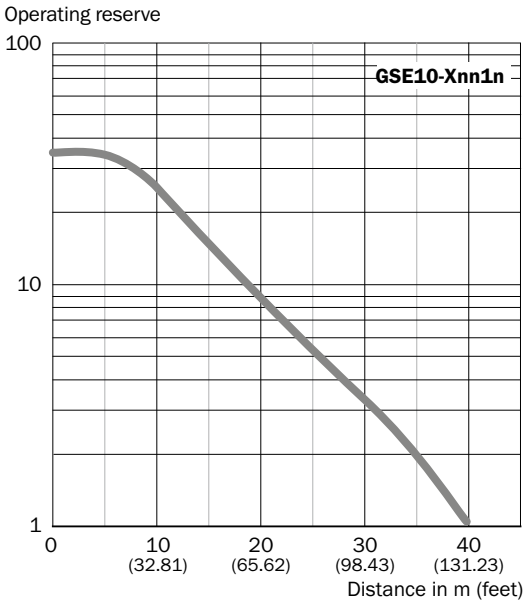

GSE10, infrared light

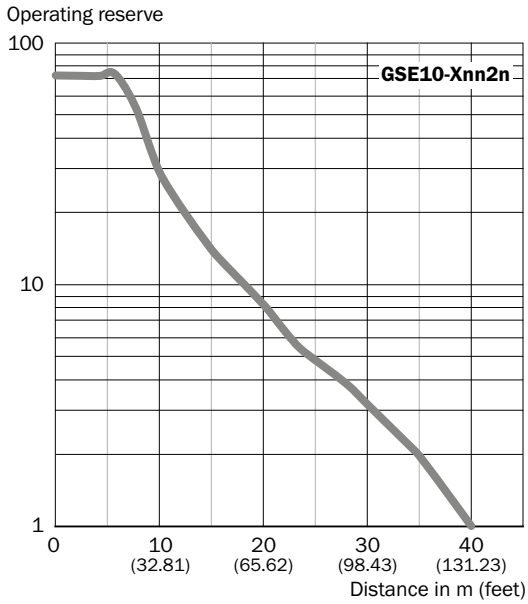

Bar diagrams

GTB10, redlight

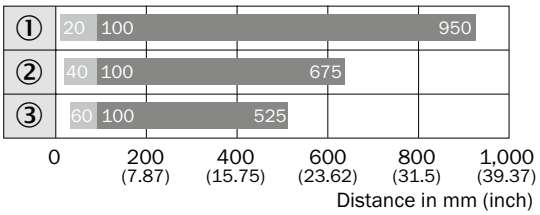

Sensing range Sensing range max.

① Sensing range on white, 90 % remission
② Sensing range on gray, 18 % remission
③ Sensing range on black, 6 % remission

GTB10, infrared light

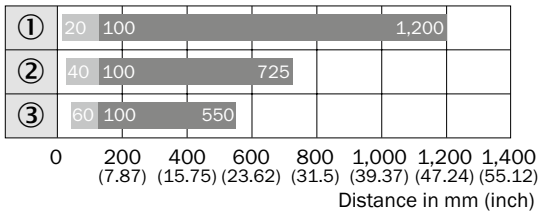

Sensing range Sensing range max.

① Sensing range on white, 90 % remission
② Sensing range on gray, 18 % remission
③ Sensing range on black, 6 % remission

GTE10, red light

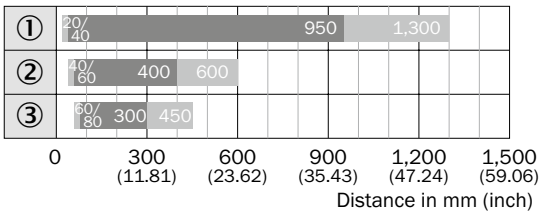

Sensing range Sensing range max.

① Sensing range on white, 90 % remission
② Sensing range on gray, 18 % remission
③ Sensing range on black, 6 % remission

GTE10, infrared light

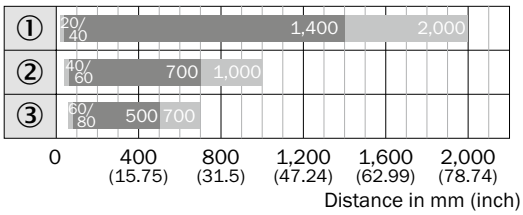

Sensing range Sensing range max.

① Sensing range on white, 90 % remission
② Sensing range on gray, 18 % remission
③ Sensing range on black, 6 % remission

G

GL10

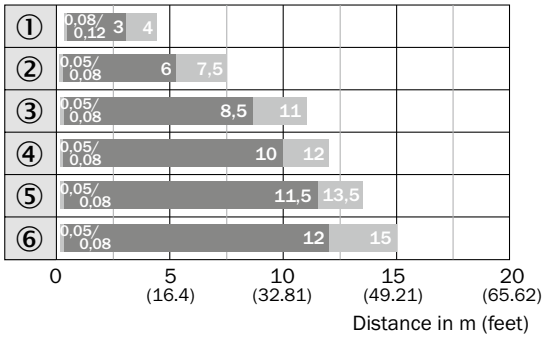

Sensing range Sensing range max.

① REF-IRF-56
② PL20A
③ PL30A
④ P250
⑤ PL40A
⑥ PL80A

GL10, Logistik, DC

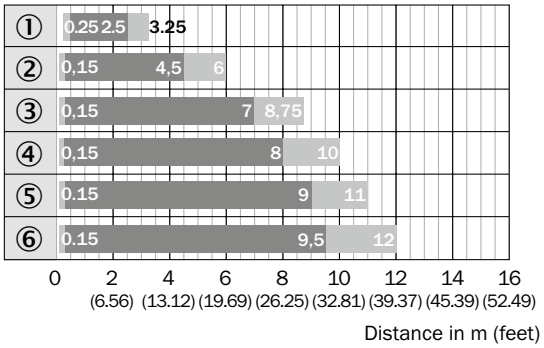

Sensing range Sensing range max.

① REF-IRF-56
② PL20A
③ PL30A
④ P250
⑤ PL40A
⑥ PL80A

GSE10, red light, infrared light

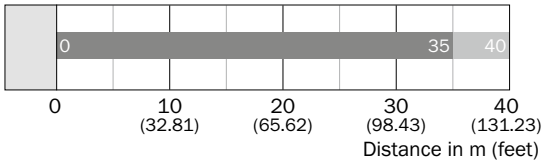

Sensing range Sensing range max.

G

Light spot diameter

GTB10, redlight

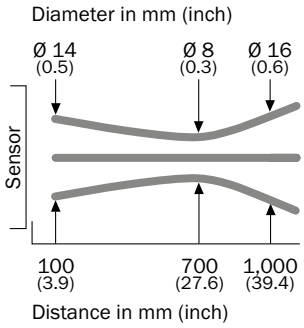

GTB10, infrared light

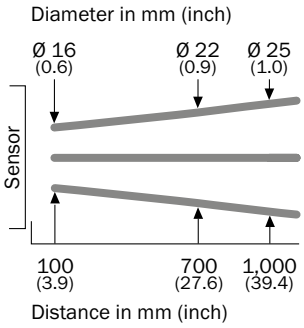

GTE10, red light

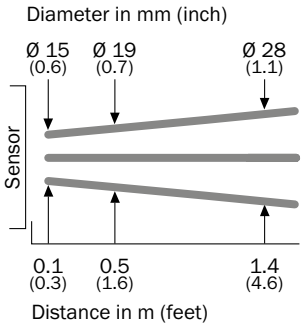

GTE10, infrared light

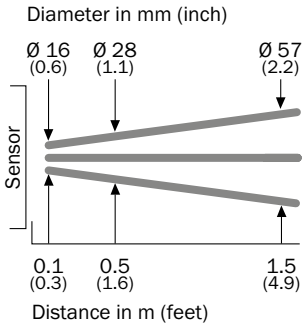

GL10, AC/DC

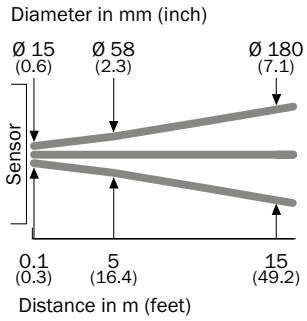

GL10, GL10G

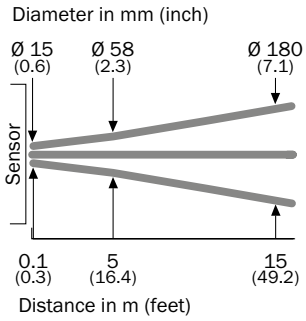

GSE10, red light

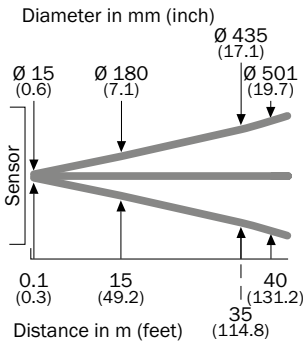

GSE10, infrared light

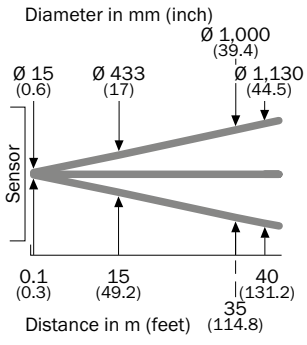

Connection diagram

Cd-044

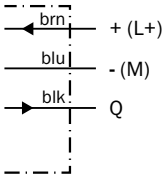

Cd-061

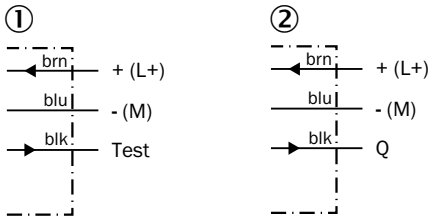

① Sender
② Receiver

Cd-163

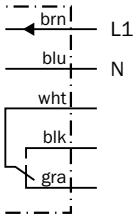

Cd-066

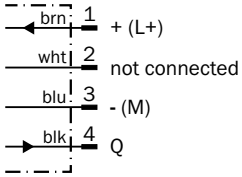

Cd-170

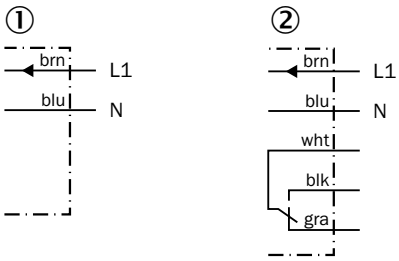

① Sender
② Receiver

Cd-073

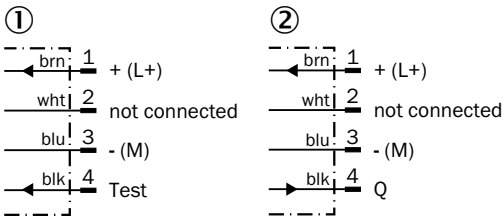

① Sender
② Receiver

G

Recommended accessories

Mounting brackets/plates

Mounting brackets

Figure	Description	Material	Model name	Part no.
	Mounting bracket for wall and floor mounting for G10 DC	Steel, zinc coated	BEF-G10DC01	2071258
	Mounting bracket for wall and floor mounting for G10 AC/DC		BEF-G10UC01	2071259

Universal bar clamp systems

Figure	Description	Material	Model name	Part no.
	Q-Lock, bar clamp system for G10 and reflector P250	Die-cast zinc, Steel, zinc coated	BEF-KHSQ12R01	2071260
	Q-Lock, bar clamp system for G10 and reflector P250, incl. sheet clamp		BEF-KHSQ12ZR01	2071262

G

Device protection (mechanical)

Figure	Description	Material	Model name	Part no.
	Weather protection hood for G10	Steel, zinc coated	BEF-G10WSG	2071960
	Weather protection hood for reflectors PL80A, P250, PL40A		BEF-PL80AWSG	2071961

Plug connectors and cables

Connecting cable (female connector-open)

- **Cable material:** PVC
- **Connector material:** TPU

Figure	Connection type head A	Connection type head B	Connecting cable	Enclosure rating	Model name	Part no.
	Female connector, M12, 4-pin, straight	Cable, open conductor heads	2 m, 4-wire	IP 67	DOL-1204-G02M	6009382
			5 m, 4-wire	IP 67	DOL-1204-G05M	6009866
	Female connector, M12, 4-pin, angled	Cable, open conductor heads	2 m, 4-wire	IP 67	DOL-1204-W02M	6009383
			5 m, 4-wire	IP 67	DOL-1204-W05M	6009867

Reflectors

Angular

Figure	Material	Description	Model name	Part no.
	PMMA/ABS	Rectangular, screw connection, 47 mm x 47 mm	P250	5304812
		Rectangular, screw connection, 38 mm x 15 mm	PL20A	1012719
		Rectangular, screw connection, 56 mm x 28 mm	PL30A	1002314
		Rectangular, screw connection, 37 mm x 56 mm	PL40A	1012720
		Rectangular, screw connection, 80 mm x 80 mm	PL80A	1003865

Fine triple reflectors

Figure	Material	Description	Model name	Part no.
	PMMA/ABS	Fine triple, screw connection, suitable for laser sensors, 47 mm x 47 mm	P250F	5308843
		Fine triple, screw connection, suitable for laser sensors, 18 mm x 18 mm	PL10F	5311210
	Plastic	Fine triple, chemically resistant, screw connection, 18 mm x 18 mm	PL10F CHEM	5321636
	PMMA/ABS	Fine triple, screw connection, suitable for laser sensors, 56 mm x 28 mm	PL30F	5326523
		Fine triple, screw connection, suitable for laser sensors, 76 mm x 45 mm	PL81-1F	5325060

Reflective tape

Figure	Description	Model name	Part no.
	Suitable for laser sensors, self-adhesive, cut, see alignment note, 56.3 mm x 56.3 mm	REF-AC1000-56	4063030
	Self-adhesive, 50 mm x 60 mm	REF-IRF-56	5314244

Round

Figure	Material	Description	Model name	Part no.
	PMMA/ABS	Round, screw connection	C110A	5304549

→ **For additional accessories, please see page L-861**

G

High-performance sensors in a rugged VISTAL™ housing

G

Product description

The W9-3 sensors feature a compact, rugged housing made from VISTAL™, offers an outstanding mechanical robustness, Plus, proprietary optic and OES3 ASIC technology provides best-in-class sensing performance. The W9-3 also includes unique connectivity options, mounting variability and optical specifications, making it the perfect solution for challenging automation applications. Add this advantage to your machine.

At a glance

- High-performance sensor in ultra-rugged VISTAL™ housing
- PinPoint LED for highly visible and precise light spot
- Two emitter LEDs for best-in-class background suppression
- Variable mounting with M3 or M4 hole pattern
- Wide range of connection options

Your benefits

- Robustness with the VISTAL™ housing
- Best in class performance
- Wide variance in connection, mounting and optic

Additional information

→ **www.mysick.com/en/W9-3**

For more information, just enter the link or scan the QR code and get direct access to technical data, CAD design models, operating instructions, software, application examples and much more.

Detailed technical data

Features

	WTB9-3	WTB9M4-3	WL9-3	WL9M4-3	WSE9-3	WSE9M4-3
Sensor principle	Photoelectric proximity sensor		Photoelectric retro-reflective sensor		Through-beam photoelectric sensor	
Detection principle	Background suppression		Autocollimation		–	
Dimensions (W x H x D)	12.2 mm x 50 mm x 23.6 mm/12.2 mm x 49.8 mm x 23.6 mm/ 12.2 mm x 52.2 mm x 23.6 mm (depending on type)					
Housing design (light emission)	Rectangular					
Mounting hole	M3	M4	M3	M4	M3	M4
Sensing range max.	20 mm ... 800 mm [1] (depending on type)		0 m ... 5 m [2] (depending on type)		0 m ... 10 m	
Sensing range	20 mm ... 400 mm [3] (depending on type)		0 m ... 3 m [2] (depending on type)		0 m ... 7 m	
Type of light	Visible red light/Infrared light (depending on type)		Visible red light			
Light source [4]	PinPoint LED /LED (depending on type)		PinPoint LED			
Wave length						
Visible red light	650 nm					
Infrared light	850 nm		–			
Adjustment	Potentiometer, 5 turns		Single teach-in button		No adjustment	
Special feature	–		Focused optics	–		

[1] Object with 90 % reflectance (referred to standard white, DIN 5033)
[2] PL80A.
[3] Object with 6 % reflectance (referred to standard white, DIN 5033)
[4] Average service life of 100,000 h at T_A = +25 °C.

G

Mechanics/electronics

	WTB9-3	WTB9M4-3	WL9-3	WL9M4-3	WSE9-3	WSE9M4-3
Supply voltage [1]	10 V DC ... 30 V DC					
Ripple [2]	< 5 V_{pp}					
Power consumption [3]	≤ 30 mA					
Output type [4]	PNP/NPN (depending on type)					
Output function	Complementary					
Switching mode [4]	Light/dark-switching					
Output current $I_{max.}$ [5]	≤ 100 mA					
Connection type	Cable, 2 m [8]/Male connector, M8/Male connector, M12/Cable with connector, M12, 120 mm [8] (depending on type)					
Circuit protection	A [9], B [10], C [11]					
Protection class	III					
Weight						
Connector	13 g					
Cable/cable with connector	80 g					
Polarisation filter	–		✔		–	
Housing material	VISTAL™					
Optics material	PMMA					

	WTB9-3	WTB9M4-3	WL9-3	WL9M4-3	WSE9-3	WSE9M4-3
Enclosure rating	IP 66/IP 67/IP 69K					
Test input sender off	–				Sender off	
Ambient operating temperature	–40 °C ... +60 °C					
Ambient storage temperature	–40 °C ... +75 °C					

[1] Limit values, operation in short-circuit protected network max. 8 A.
[2] May not exceed or fall short of V_S tolerances.
[3] Without load.
[4] Q = light-switching.
[5] As of Tu 50 °C, a max. load current Ilmax. = 50 mA is permitted.
[6] Signal transit time with resistive load.
[7] With light/dark ratio 1:1.
[8] Do not bend below 0 °C.
[9] A = V_S connections reverse-polarity protected.
[10] B = inputs and output reverse-polarity protected.
[11] C = interference suppression.

Ordering information

Other models available at www.mysick.com/en/W9-3

WTB9-3

- **Detection principle:** background suppression
- **Mounting hole:** M3
- **Adjustment:** potentiometer, 5 turns
- **Switching mode:** light/dark-switching (Q = light-switching.)

Type of light	Sensing range max. [1]	Light spot size (distance)	Switching frequency [2]/ Response time [3]	Output type	Connection	Connection diagram	Model name	Part no.
Visible red light	20 mm ... 350 mm	Ø 4.5 mm (75 mm)	1,500 Hz/ < 0.333 ms	PNP	Cable, 4-wire, 2 m, PVC	Cd-094	WTB9-3P1161	1049043
					Cable, 4-wire, 5 m, PVC	Cd-094	WTB9-3P1261	1049044
					Connector M8, 4-pin	Cd-084	WTB9-3P2261	1049047
					Connector M12, 4-pin	Cd-084	WTB9-3P2461	1049049
					Cable with connector M12, 4-pin, 120 mm, PVC	Cd-084	WTB9-3P3461	1049051
				NPN	Cable, 4-wire, 2 m, PVC	Cd-094	WTB9-3N1161	1049052
					Connector M12, 4-pin	Cd-084	WTB9-3N2461	1049053
Infrared light	20 mm ... 500 mm	Ø 20 mm (250 mm)	1,000 Hz/ < 0.5 ms	PNP	Cable, 4-wire, 2 m, PVC	Cd-094	WTB9-3P1111	1049042
					Connector M8, 4-pin	Cd-084	WTB9-3P2211	1049045
					Connector M12, 4-pin	Cd-084	WTB9-3P2411	1049048
	20 mm ... 800 mm	Ø 40 mm (400 mm)	200 Hz/ < 2.5 ms	PNP	Cable, 4-wire, 2 m, PVC	Cd-094	WTB9-3P1111S14	1052173
					Connector M8, 4-pin	Cd-084	WTB9-3P2211S14	1052171
					Connector M12, 4-pin	Cd-084	WTB9-3P2411S14	1052172
					Cable with connector M12, 4-pin, 120 mm, PVC	Cd-084	WTB9-3P3411S14	1054431
				NPN	Cable, 4-wire, 2 m, PVC	Cd-094	WTB9-3N1111S14	1050948

[1] Object with 90 % reflectance (referred to standard white, DIN 5033)
[7] With light/dark ratio 1:1.
[6] Signal transit time with resistive load.

WTB9M4-3

- **Detection principle:** background suppression
- **Mounting hole:** M4
- **Adjustment:** potentiometer, 5 turns
- **Switching mode:** light/dark-switching (Q = light-switching.)

Type of light	Sensing range max. [1]	Light spot size (distance)	Switching frequency [2]/ Response time [3]	Output type	Connection	Connection diagram	Model name	Part no.
Visible red light	20 mm ... 350 mm	Ø 4.5 mm (75 mm)	1,500 Hz/ < 0.333 ms	PNP	Cable, 4-wire, 2 m, PVC	Cd-094	WTB9M4-3P1161	1051887
					Connector M8, 4-pin	Cd-084	WTB9M4-3P2261	1051889
					Connector M12, 4-pin	Cd-084	WTB9M4-3P2461	1051891
				NPN	Cable, 4-wire, 2 m, PVC	Cd-094	WTB9M4-3N1161	1051882
					Connector M8, 4-pin	Cd-084	WTB9M4-3N2261	1051885
Infrared light	20 mm ... 500 mm	Ø 20 mm (250 mm)	1,000 Hz/ < 0.5 ms	PNP	Cable, 4-wire, 2 m, PVC	Cd-094	WTB9M4-3P1111	1051886
					Connector M8, 4-pin	Cd-084	WTB9M4-3P2211	1051888
					Connector M12, 4-pin	Cd-084	WTB9M4-3P2411	1051890
				NPN	Connector M12, 4-pin	Cd-084	WTB9M4-3N2411	1055145

[1] Object with 90 % reflectance (referred to standard white, DIN 5033)
[7] With light/dark ratio 1:1.
[6] Signal transit time with resistive load.

WL9-3

- **Detection principle:** autocollimation
- **Type of light:** visible red light
- **Mounting hole:** M3
- **Switching mode:** light/dark-switching (Q = light-switching.)

Sensing range max. [1]	Light spot size (distance)	Switching frequency [2]/Response time [3]	Adjustment	Output type	Connection	Connection diagram	Model name	Part no.
0 m ... 0.4 m	Ø 2 mm (35 mm)	1,000 Hz/ < 0.5 ms	Single teach-in button	PNP	Cable, 4-wire, 2 m, PVC	Cd-094	WL9-3P1162	1049054
					Connector M8, 4-pin	Cd-084	WL9-3P2262	1049058
					Connector M12, 4-pin	Cd-084	WL9-3P2462	1049061
					Cable with connector M12, 4-pin, 120 mm, PVC	Cd-084	WL9-3P3462	1049065
				NPN	Cable, 4-wire, 2 m, PVC	Cd-094	WL9-3N1162	1049068
					Connector M12, 4-pin	Cd-084	WL9-3N2462	1049072
0 m ... 4 m	Ø 45 mm (1.5 m)	1,000 Hz/ < 0.5 ms	–	PNP	Cable, 4-wire, 2 m, PVC	Cd-094	WL9-3P1130	1049055
					Connector M8, 4-pin	Cd-084	WL9-3P2230	1049059
					Connector M12, 4-pin	Cd-084	WL9-3P2430	1049062
					Cable with connector M12, 4-pin, 120 mm, PVC	Cd-084	WL9-3P3430	1049066
				NPN	Cable, 4-wire, 2 m, PVC	Cd-094	WL9-3N1130	1049069
					Connector M8, 4-pin	Cd-084	WL9-3N2230	1049071
					Connector M12, 4-pin	Cd-084	WL9-3N2430	1049073

[1] PL80A.
[7] With light/dark ratio 1:1.
[6] Signal transit time with resistive load.

Sensing range max. [1]	Light spot size (distance)	Switching frequency [2]/Response time [3]	Adjustment	Output type	Connection	Connection diagram	Model name	Part no.
0 m ... 5 m	Ø 45 mm (1.5 m)	1,000 Hz/ < 0.5 ms	Single teach-in button	PNP	Cable, 4-wire, 2 m, PVC	Cd-094	WL9-3P1132	1049056
					Cable, 4-wire, 5 m, PVC	Cd-094	WL9-3P1232	1049057
					Connector M8, 4-pin	Cd-084	WL9-3P2232	1049060
					Connector M12, 4-pin	Cd-084	WL9-3P2432	1049063
					Cable with connector M12, 4-pin, 120 mm, PVC	Cd-084	WL9-3P3432	1049067
				NPN	Cable, 4-wire, 2 m, PVC	Cd-094	WL9-3N1132	1049070
					Connector M12, 4-pin	Cd-084	WL9-3N2432	1049074

[1] PL80A.
[7] With light/dark ratio 1:1.
[6] Signal transit time with resistive load.

WL9M4-3

- **Detection principle:** autocollimation
- **Type of light:** visible red light
- **Mounting hole:** M4
- **Switching mode:** light/dark-switching (Q = light-switching.)

Sensing range max. [1]	Light spot size (distance)	Switching frequency [2]/Response time [3]	Adjustment	Output type	Connection	Connection diagram	Model name	Part no.
0 m ... 5 m	Ø 45 mm (1.5 m)	1,000 Hz/ < 0.5 ms	Single teach-in button	PNP	Cable, 4-wire, 2 m, PVC	Cd-094	WL9M4-3P1132	1051894
					Connector M8, 4-pin	Cd-084	WL9M4-3P2232	1051895
					Connector M12, 4-pin	Cd-084	WL9M4-3P2432	1051896
					Cable with connector M12, 4-pin, 120 mm, PVC	Cd-084	WL9M4-3P3432	1051907
				NPN	Cable, 4-wire, 2 m, PVC	Cd-094	WL9M4-3N1132	1051892
					Connector M8, 4-pin	Cd-084	WL9M4-3N2232	1051893

[1] PL80A.
[7] With light/dark ratio 1:1.
[6] Signal transit time with resistive load.

WSE9-3

- **Type of light:** visible red light
- **Mounting hole:** M3
- **Switching mode:** light/dark-switching (Q = light-switching.)

Sensing range max.	Light spot size (distance)	Switching frequency [2]/Response time [3]	Adjustment	Output type	Connection	Connection diagram	Model name	Part no.
0 m ... 10 m	Ø 25 mm (1.0 m)	1,000 Hz/ < 0.5 ms	–	PNP	Cable, 4-wire, 2 m, PVC	Cd-074	WSE9-3P1130	1049075
					Connector M8, 4-pin	Cd-077	WSE9-3P2230	1049076
					Connector M12, 4-pin	Cd-077	WSE9-3P2430	1049077
					Cable with connector M12, 4-pin, 120 mm, PVC	Cd-077	WSE9-3P3430	1049078
				NPN	Cable, 4-wire, 2 m, PVC	Cd-074	WSE9-3N1130	1049079
					Connector M8, 4-pin	Cd-077	WSE9-3N2230	1055041
					Connector M12, 4-pin	Cd-077	WSE9-3N2430	1049080

[7] With light/dark ratio 1:1.
[6] Signal transit time with resistive load.

WSE9M4-3

- **Type of light:** visible red light
- **Mounting hole:** M4
- **Switching mode:** light/dark-switching (Q = light-switching.)

Sensing range max.	Light spot size (distance)	Switching frequency [2]/Response time [3]	Adjustment	Output type	Connection	Connection diagram	Model name	Part no.
0 m ... 10 m	Ø 25 mm (1.0 m)	1,000 Hz/ < 0.5 ms	–	PNP	Cable, 4-wire, 2 m, PVC	Cd-074	WSE9M4-3P1130	1051911
					Connector M8, 4-pin	Cd-077	WSE9M4-3P2230	1051912
					Connector M12, 4-pin	Cd-077	WSE9M4-3P2430	1051913
					Cable with connector M12, 4-pin, 120 mm	Cd-077	WSE9M4-3P3430	1054435
				NPN	Cable, 4-wire, 2 m, PVC	Cd-074	WSE9M4-3N1130	1051914
					Connector M8, 4-pin	Cd-077	WSE9M4-3N2230	1052938

[7] With light/dark ratio 1:1.

[6] Signal transit time with resistive load.

Dimensional drawings

Dimensions in mm (inch)

WTB9-3

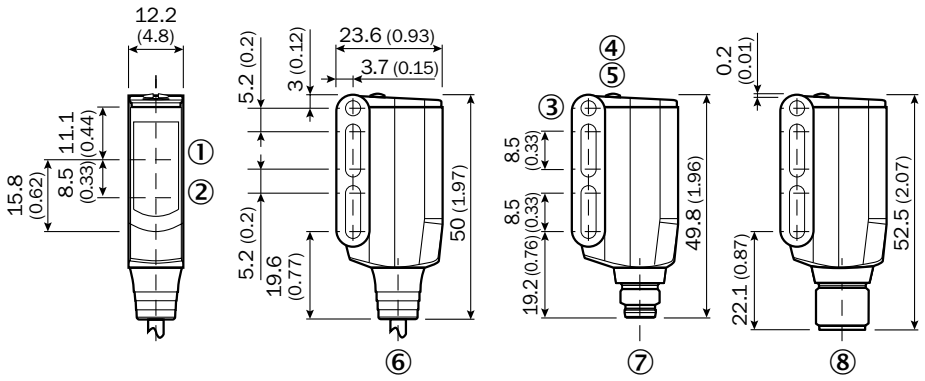

① Center of optical axis, receiver
② Center of optical axis, sender
③ Mounting hole M3 (Ø 3.1 mm)
④ LED indicator yellow: Light received
⑤ LED signal strength indicator green:power on
⑥ Connection cable 2 m
⑦ Connector M8, 4-pin
⑧ Connector M12, 4-pin

WTB9M4-3

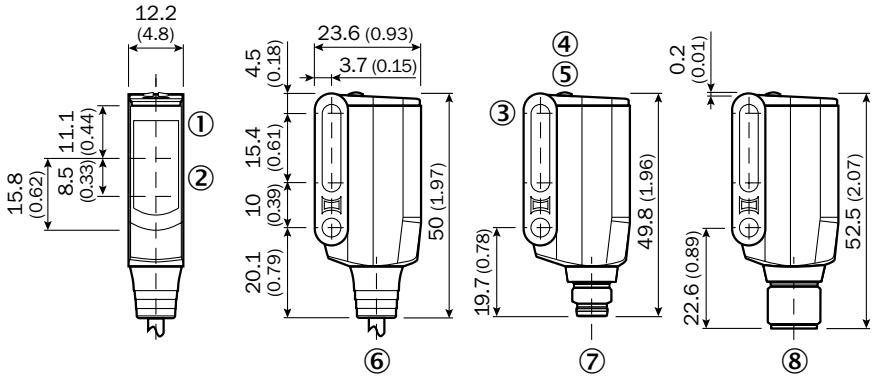

① Center of optical axis, receiver
② Center of optical axis, sender
③ Mounting hole M4 (Ø 4.1 mm)
④ LED indicator yellow: Light received
⑤ LED signal strength indicator green:power on
⑥ Connection cable
⑦ Connector M8, 4-pin
⑧ Connector M12, 4-pin

G

WL9-3, WL9-3G

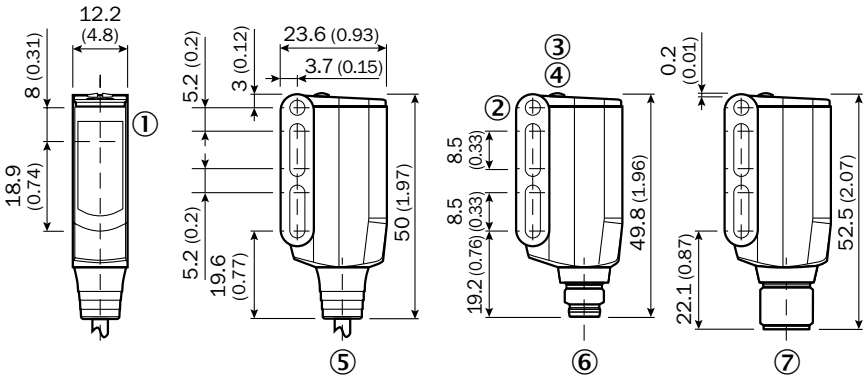

① Centre of optical axis, sender and receiver
② Mounting hole M3 (Ø 3.1 mm)
③ LED indicator yellow: Light received
④ LED signal strength indicator green:power on
⑤ Connecting cable or connector
⑥ Connector M8, 4-pin
⑦ Connector M12, 4-pin

WL9M4-3, WL9M4-3G

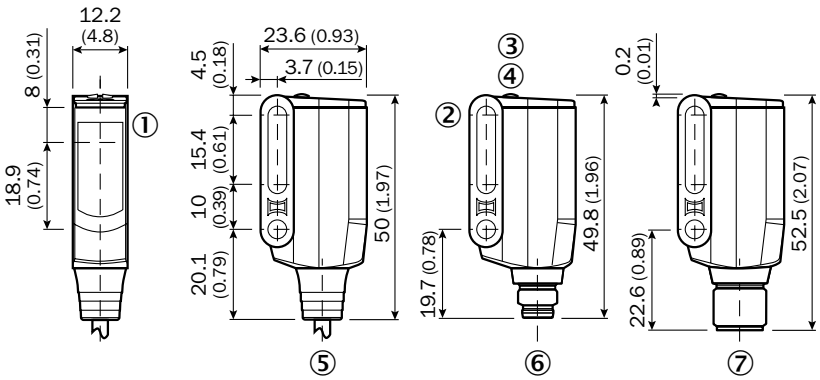

① Centre of optical axis, sender and receiver
② Mounting hole M4 (Ø 4.1 mm)
③ LED indicator yellow: Light received
④ LED signal strength indicator green:power on
⑤ Connecting cable or connector
⑥ Connector M8, 4-pin
⑦ Connector M12, 4-pin

G

Adjustments

Potentiometer

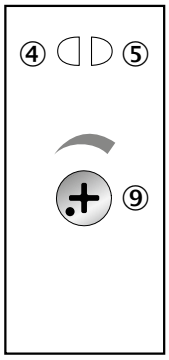

④ LED indicator yellow: Light received
⑤ LED signal strength indicator green:power on
⑨ Sensing range adjustment

Single teach-in button

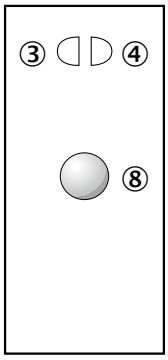

③ LED indicator yellow: Light received
④ LED signal strength indicator green:power on
⑧ Teach-in button

No adjustment possibility

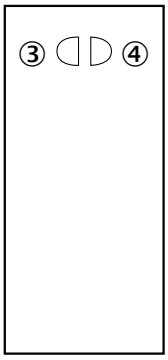

③ LED indicator yellow: Light received
④ LED signal strength indicator green:power on

Characteristic curves

Black-white shift

WTB9-3, red light, 350 mm

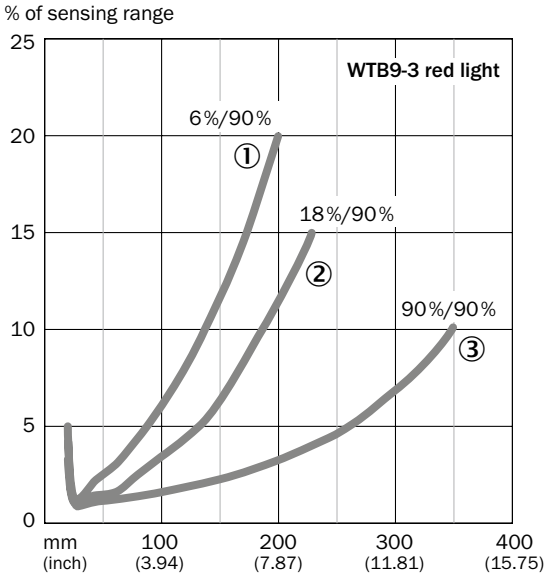

① Sensing range on black, 6 % remission
② Sensing range on gray, 18 % remission
③ Sensing range on white, 90 % remission

WTB9-3, infrared light, 500 mm

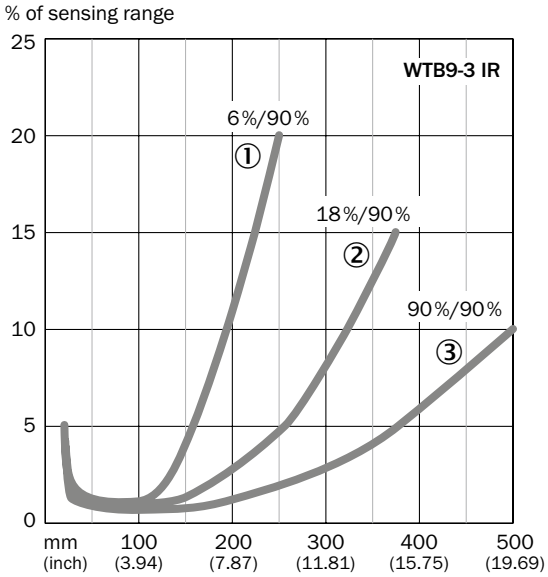

① Sensing range on black, 6 % remission
② Sensing range on gray, 18 % remission
③ Sensing range on white, 90 % remission

WTB9-3, infrared light, 800 mm

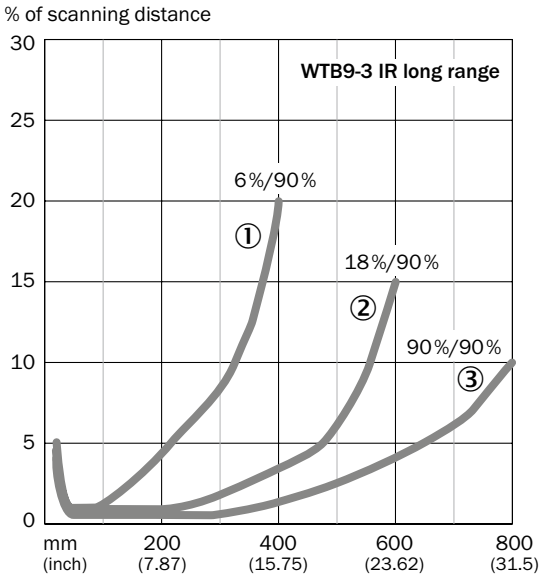

① Sensing range on black, 6 % remission
② Sensing range on gray, 18 % remission
③ Sensing range on white, 90 % remission

G

Operating reserve

WL9-3, red light, 0.4 m

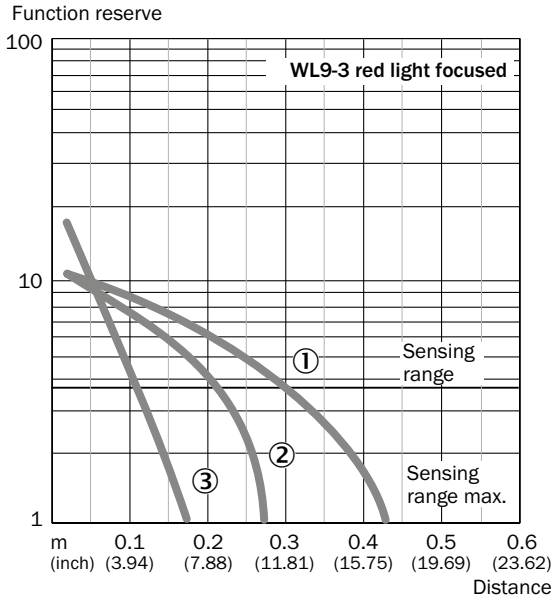

① PL80A
② PL40A
③ REF-IRF-56

WL9-3, red light, 4 m

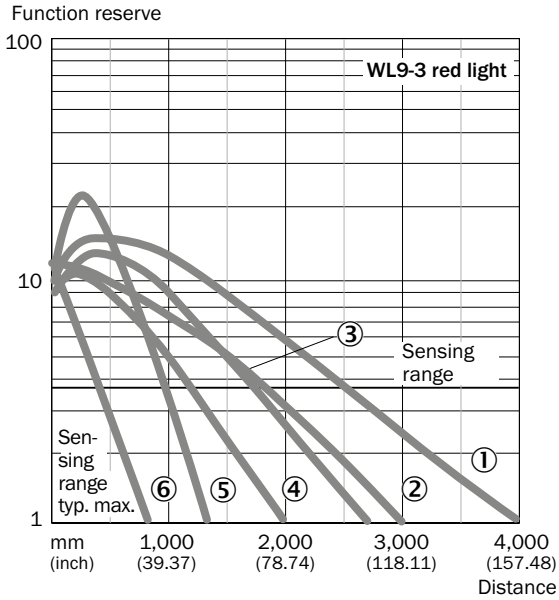

① PL80A
② P250
③ PL40A
④ PL20A
⑤ PL10F
⑥ REF-IRF-56

G

WL9-3, red light, 5 m

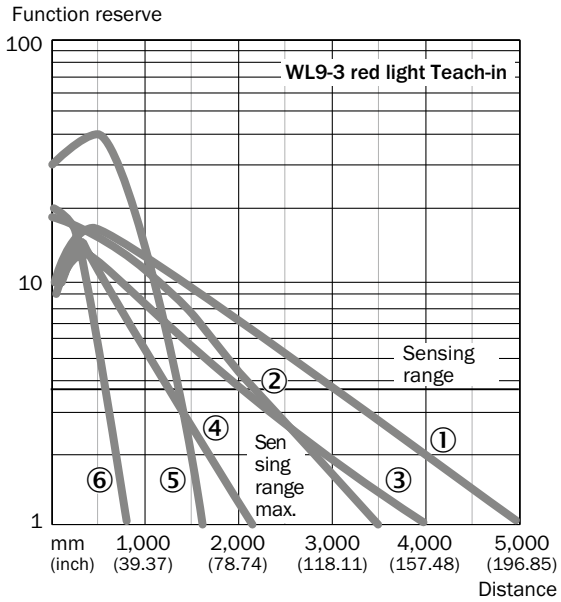

① PL80A
② P250
③ PL40A
④ PL20A
⑤ PL10F
⑥ REF-IRF-56

WSE9-3, red light, 10 m

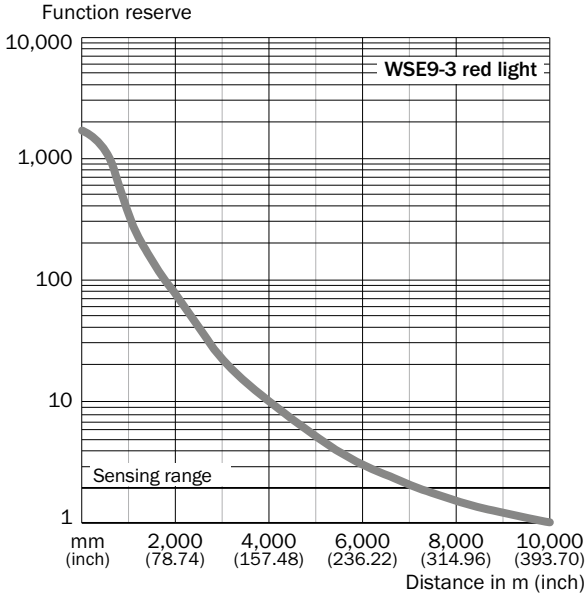

Bar diagrams

WTB9-3, red light, 350 mm

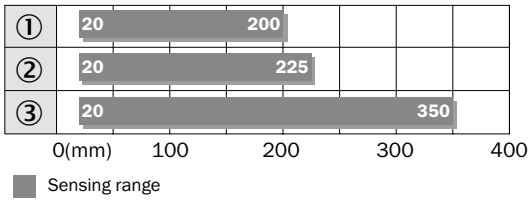

① Sensing range on black, 6 % remission
② Sensing range on gray, 18 % remission
③ Sensing range on white, 90 % remission

WTB9-3, infrared light, 500 mm

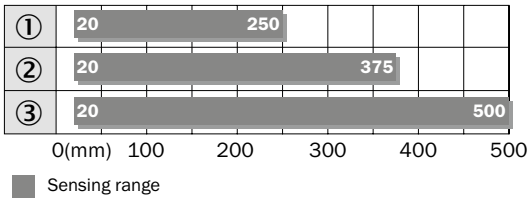

① Sensing range on black, 6 % remission
② Sensing range on gray, 18 % remission
③ Sensing range on white, 90 % remission

WTB9-3, infrared light, 800 mm

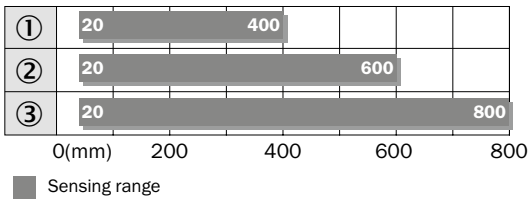

① Sensing range on black, 6 % remission
② Sensing range on gray, 18 % remission
③ Sensing range on white, 90 % remission

WL9-3, red light, 0.4 m

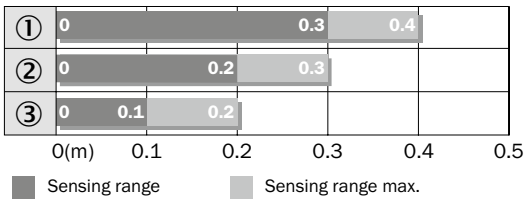

① PL80A
② PL40A
③ REF-IRF-56

WL9-3, red light, 4 m

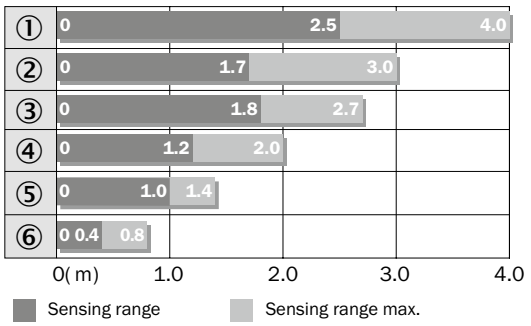

① PL80A
② P250
③ PL40A
④ PL20A
⑤ PL10F
⑥ REF-IRF-56

WL9-3, red light, 5 m

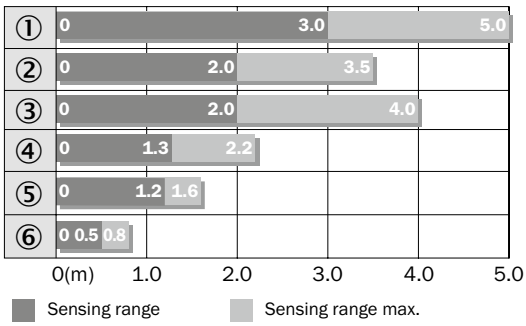

① PL80A
② P250F
③ PL40A
④ PL20F
⑤ PL10F
⑥ REF-IRF-56

WSE9-3, red light, 10 m

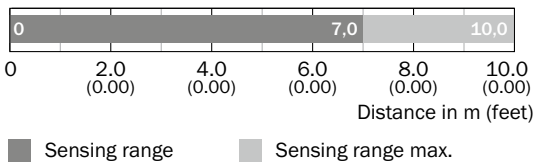

G

Light spot diameter

WTB9-3, red light, 350 mm

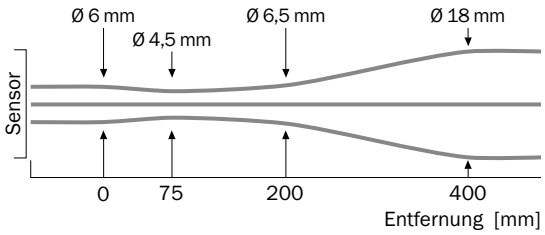

WTB9-3, infrared light, 500 mm

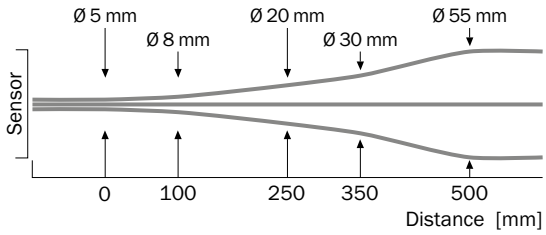

WTB9-3, infrared light, 800 mm

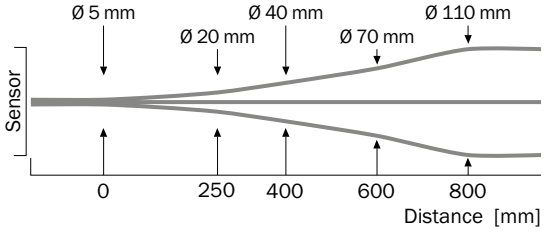

WL9-3, red light, 0.4 m

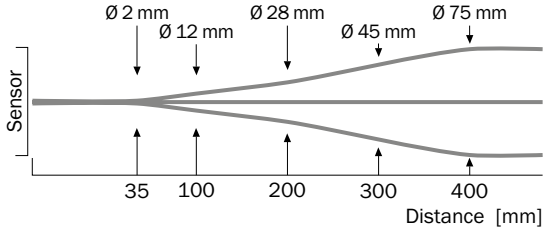

WL9-3, red light, 4 m

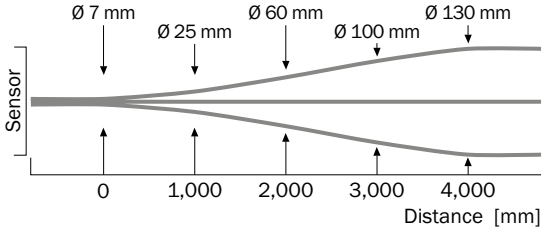

WL9-3, red light, 5 m

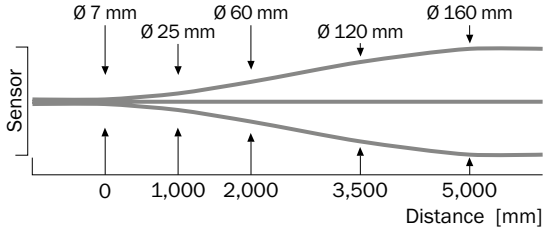

G

WSE9-3, red light, 10 m

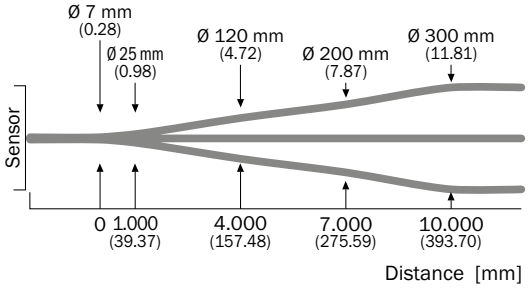

Connection diagram

Cd-074

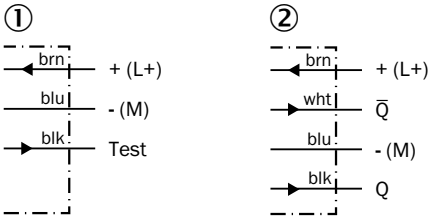

① Sender
② Receiver

Cd-077

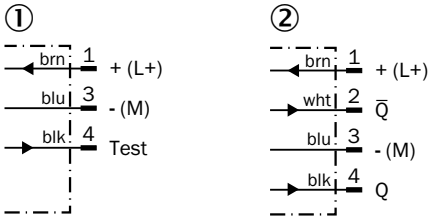

① Sender
② Receiver

Cd-084

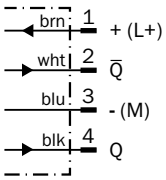

Cd-094

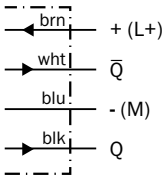

Recommended accessories

Mounting brackets/plates

Mounting brackets

Figure	Material	Description	Model name	Part no.
	Steel, zinc coated	Mounting bracket for wall mounting	BEF-W160	5305197
		Mounting bracket	BEF-WN-W9-2	2022855

Mounting plates

Figure	Material	Description	Model name	Part no.
	Stainless steel	Adapter plate	BEF-AP-W9	2022734
	PMMA, Brass (Br)	Fastening plate with threaded sleeve M3	BEF-GPM3-W9	4066039

G

Plug connectors and cables

Connecting cable (female connector-open)

- **Cable material:** PVC

Figure	Connection type head A	Connection type head B	Connecting cable	Connector material	Enclosure rating	Model name	Part no.
	Female connector, M8, 4-pin, straight	Cable, open conductor heads	2 m, 4-wire	PVC	IP 67	DOL-0804-G02M	6009870
			5 m, 4-wire	PVC	IP 67	DOL-0804-G05M	6009872
	Female connector, M8, 4-pin, angled	Cable, open conductor heads	2 m, 4-wire	PVC	IP 67	DOL-0804-W02M	6009871
			5 m, 4-wire	PVC	IP 67	DOL-0804-W05M	6009873
	Female connector, M12, 4-pin, straight	Cable, open conductor heads	2 m, 4-wire	TPU	IP 67	DOL-1204-G02M	6009382
			5 m, 4-wire	TPU	IP 67	DOL-1204-G05M	6009866
	Female connector, M12, 4-pin, angled	Cable, open conductor heads	2 m, 4-wire	TPU	IP 67	DOL-1204-W02M	6009383
			5 m, 4-wire	TPU	IP 67	DOL-1204-W05M	6009867

Female connector (ready to assemble)

Figure	Connection type head A	Connection type head B	Connector material	Enclosure rating	Model name	Part no.
	Female connector, M8, 4-pin, straight	Screw-type terminals	PBT	IP 67	DOS-0804-G	6009974
	Female connector, M8, 4-pin, angled	Pin penetration	PBT	IP 67	DOS-0804-W	6009975
	Female connector, M12, 4-pin, straight	Screw-type terminals	PBT	IP 67	DOS-1204-G	6007302
	Female connector, M12, 4-pin, angled	Screw-type terminals	PBT	IP 67	DOS-1204-W	6007303

Male connector (ready to assemble)

Figure	Connection type head A	Connection type head B	Connector material	Enclosure rating	Model name	Part no.
	Male connector, M12, 4-pin, straight	Screw-type terminals	PBT	IP 67	STE-1204-G	6009932
	Male connector, M12, 4-pin, angled	Screw-type terminals	PBT	IP 67	STE-1204-W	6022084

Masks

G

Figure	Description	Model name	Part no.
	Mask card, vertical/horizontal slots, slot width: 0.5 mm / 1.0 mm / 1.5 mm / 2.0 mm	BL-9-2	4033253

Universal bar clamp systems

Figure	Material	Description	Model name	Part no.
	Zinc plated steel (sheet), Diecast zinc (clamp)	Plate N02 for universal clamp bracket	BEF-KHS-N02	2051608
		Plate N08 for universal clamp bracket	BEF-KHS-N08	2051607

Reflectors

Angular

Figure	Material	Description	Model name	Part no.
	PMMA/ABS	Rectangular, screw connection, 47 mm x 47 mm	P250	5304812
		Rectangular, screw connection, 38 mm x 15 mm	PL20A	1012719
		Rectangular, screw connection, 56 mm x 28 mm	PL30A	1002314
		Rectangular, screw connection, 37 mm x 56 mm	PL40A	1012720
		Rectangular, screw connection, 80 mm x 80 mm	PL80A	1003865

Reflective tape

Figure	Description	Model name	Part no.
	Self-adhesive, 50 mm x 60 mm	REF-IRF-56	5314244

Round

Figure	Material	Description	Model name	Part no.
	PMMA/ABS	Round, screw connection	C110A	5304549

→ **For additional accessories, please see page L-861**

G

High-performance sensors for clear material detection in a rugged VISTAL™ housing

Product description

The WL9G-3 Clear Material photoelectric sensor family features a compact, rugged housing. They are high-performance sensors that are ideal for clear object detection. These sensors have a tough plastic housing made from VISTAL™, which offers outstanding mechanical durability. The WL9G-3 Clear Material family also includes unique connectivity options, mounting variability and optical specifications, making it the perfect solution for challenging automation applications. Add this advantage to your machine.

At a glance

- High-performance sensor in ultra-rugged VISTAL™ housing
- Best-in-class optical performance for transparent object detection
- Continuous threshold adaption
- PinPoint LED for highly visible and precise light spot
- Variable mounting with M3 or M4 hole pattern
- Wide range of connection options

Your benefits

- Tough VISTAL™ housing provides reliable installation and operation
- Best-in-class optical performance
- Wide variety of connection, mounting and optical possibilities to solve many different applications

Additional information

→ **www.mysick.com/en/W9-3_Glass**

For more information, just enter the link or scan the QR code and get direct access to technical data, CAD design models, operating instructions, software, application examples and much more.

Detailed technical data

Features

	WL9G-3	WL9M4G-3
Sensor principle	Photoelectric retro-reflective sensor	
Detection principle	Autocollimation	
Dimensions (W x H x D)	12.2 mm x 50 mm x 23.6 mm 12.2 mm x 49.8 mm x 23.6 mm 12.2 mm x 52.2 mm x 23.6 mm (depending on type)	
Housing design (light emission)	Rectangular	
Mounting hole	M3	M4
Sensing range max. [1]	0 m ... 5 m	
Sensing range [1]	0 m ... 3 m	
Type of light	Visible red light	
Light source [2]	PinPoint LED	
Light spot size (distance)	Ø 45 mm (1.5 m)	
Wave length	650 nm	
Adjustment	Single teach-in button	
Continuous threshold adaption	✔	
Special feature	Detection of transparent objects	

[1] PL80A.

[2] Average service life of 100,000 h at T_A = +25 °C.

Mechanics/electronics

	WL9G-3	WL9M4G-3
Supply voltage [1]	10 V DC ... 30 V DC	
Ripple [2]	< 5 V_{pp}	
Power consumption [3]	≤ 20 mA	
Output type [4]	PNP/NPN (depending on type)	
Output function	Complementary	
Switching mode [4]	Light/dark-switching [4]	
Output current $I_{max.}$ [5]	≤ 100 mA	
Response time [6]	< 0.5 ms	
Switching frequency [7]	1,000 Hz	
Connection type	Cable, 2 m [8]/Male connector, M8/Male connector, M12/ Cable with connector, M12, 120 mm [8] (depending on type)	
Circuit protection	A [9], B [10], C [11]	
Protection class	III	
Weight		
Connector M8, 4-pin	13 g	
Cable/cable with connector	80 g	
Polarisation filter	✔	
Housing material	VISTAL™	

G

	WL9G-3	WL9M4G-3
Optics material	PMMA	
Enclosure rating	IP 66/IP 67/IP 69K	
Ambient operating temperature	–40 °C ... +60 °C	
Ambient storage temperature	–40 °C ... +75 °C	

[1] Limit values, operation in short-circuit protected network max. 8 A.
[2] May not exceed or fall short of V_S tolerances.
[3] Without load.
[4] Q = light-switching.
[5] As of Tu 50 °C, a max. load current Ilmax. = 50 mA is permitted.
[6] Signal transit time with resistive load.
[7] With light/dark ratio 1:1.
[8] Do not bend below 0 °C.
[9] A = V_S connections reverse-polarity protected.
[10] B = inputs and output reverse-polarity protected.
[11] C = interference suppression.

Ordering information

Other models available at www.mysick.com/en/W9-3_Glass

WL9G-3

- **Mounting hole:** M3
- **Detection principle:** autocollimation

Adjustment	Sensing range max. [1]	Switching mode [2]	Output type	Connection	Connection diagram	Model name	Part no.
Single teach-in button	0 m ... 5 m	Light/dark-switching	PNP	Cable, 4-wire, 2 m, PVC	Cd-094	WL9G-3P1132	1049081
				Connector M8, 4-pin	Cd-084	WL9G-3P2232	1049082
				Connector M12, 4-pin	Cd-084	WL9G-3P2432	1049083
				Cable with connector M12, 4-pin, 120 mm, PVC	Cd-084	WL9G-3P3432	1049084
			NPN	Cable, 4-wire, 2 m, PVC	Cd-094	WL9G-3N1132	1049085
				Connector M12, 4-pin	Cd-084	WL9G-3N2432	1054152

[1] PL80A.
[2] Q = light-switching.

WL9M4G-3

- **Mounting hole:** M4
- **Detection principle:** autocollimation

Adjustment	Sensing range max. [1]	Switching mode [2]	Output type	Connection	Connection diagram	Model name	Part no.
Single teach-in button	0 m ... 5 m	Light/dark-switching	PNP	Cable, 4-wire, 2 m, PVC	Cd-094	WL9M4G-3P1132	1051898
				Connector M8, 4-pin	Cd-084	WL9M4G-3P2232	1051899
				Connector M12, 4-pin	Cd-084	WL9M4G-3P2432	1051900
				Cable with connector M12, 4-pin, 120 mm, PVC	Cd-084	WL9M4G-3P3432	1051910
			NPN	Cable, 4-wire, 2 m, PVC	Cd-094	WL9M4G-3N1132	1051897

[1] PL80A.
[2] Q = light-switching.

Dimensional drawings

Dimensions in mm (inch)

WL9G-3

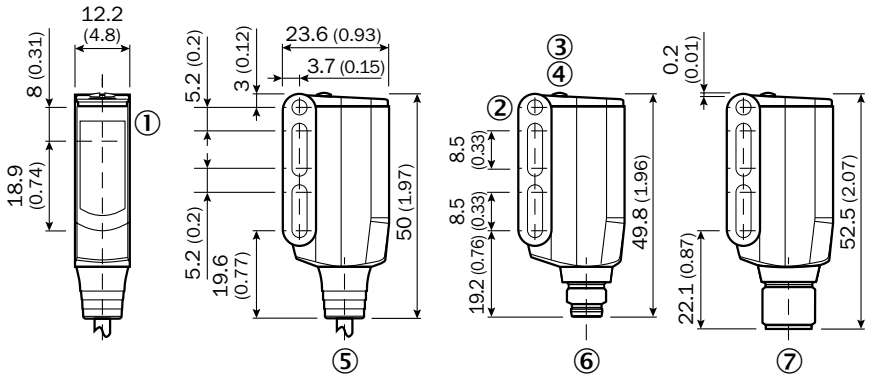

① Centre of optical axis, sender and receiver
② Mounting hole M3 (Ø 3.1 mm)
③ LED indicator yellow: Light received
④ LED signal strength indicator green:power on
⑤ Connecting cable or connector
⑥ Connector M8, 4-pin
⑦ Connector M12, 4-pin

WL9M4G-3

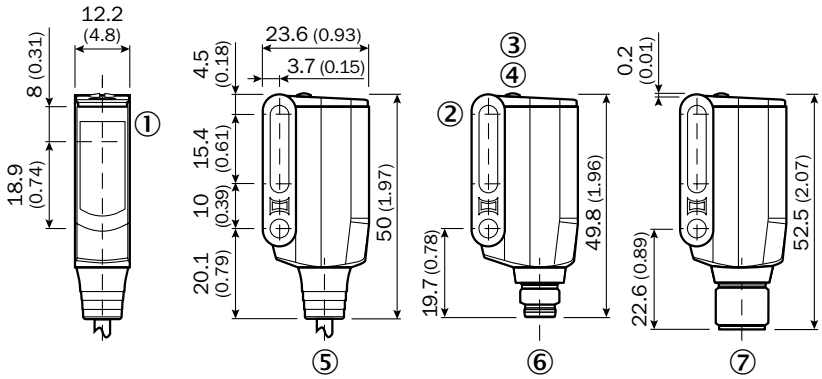

① Centre of optical axis, sender and receiver
② Mounting hole M4 (Ø 4.1 mm)
③ LED indicator yellow: Light received
④ LED signal strength indicator green:power on
⑤ Connecting cable or connector
⑥ Connector M8, 4-pin
⑦ Connector M12, 4-pin

Adjustments

Single teach-in button

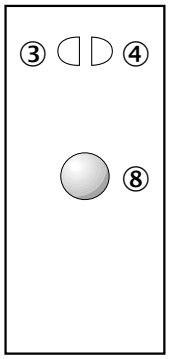

③ LED indicator yellow: Light received
④ LED signal strength indicator green:power on
⑧ Teach-in button

Characteristic curves

Operating reserve

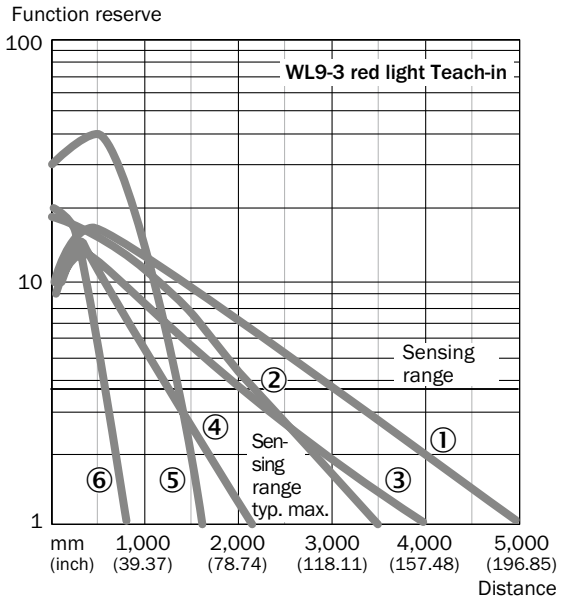

① PL80A
② P250F
③ PL40A
④ PL20F
⑤ PL10F
⑥ REF-IRF-56

G

Bar diagrams

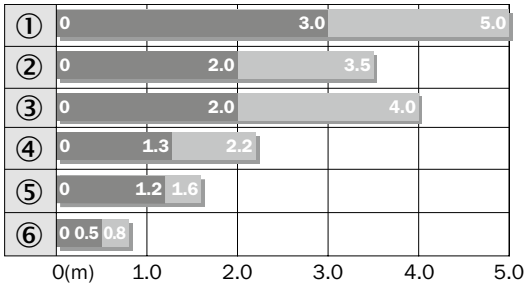

① PL80A
② P250F
③ PL40A
④ PL20F
⑤ PL10F
⑥ REF-IRF-56

Light spot diameter

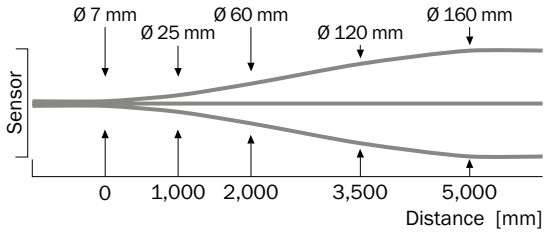

Connection diagram

Cd-084

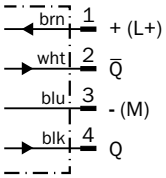

Cd-094

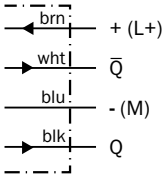

G

Recommended accessories

Mounting brackets/plates

Mounting brackets

Figure	Material	Description	Model name	Part no.
	Steel, zinc coated	Mounting bracket for wall mounting	BEF-W160	5305197
		Mounting bracket	BEF-WN-W9-2	2022855

Mounting plates

Figure	Material	Description	Model name	Part no.
	Stainless steel	Adapter plate	BEF-AP-W9	2022734
	PMMA, Brass (Br)	Fastening plate with threaded sleeve M3	BEF-GPM3-W9	4066039

Plug connectors and cables

Connecting cable (female connector-open)

- **Cable material:** PVC

Figure	Connection type head A	Connection type head B	Connecting cable	Connector material	Enclosure rating	Model name	Part no.
	Female connector, M8, 4-pin, straight	Cable, open conductor heads	2 m, 4-wire	PVC	IP 67	DOL-0804-G02M	6009870
			5 m, 4-wire	PVC	IP 67	DOL-0804-G05M	6009872
	Female connector, M8, 4-pin, angled	Cable, open conductor heads	2 m, 4-wire	PVC	IP 67	DOL-0804-W02M	6009871
			5 m, 4-wire	PVC	IP 67	DOL-0804-W05M	6009873
	Female connector, M12, 4-pin, straight	Cable, open conductor heads	2 m, 4-wire	TPU	IP 67	DOL-1204-G02M	6009382
			5 m, 4-wire	TPU	IP 67	DOL-1204-G05M	6009866
	Female connector, M12, 4-pin, angled	Cable, open conductor heads	2 m, 4-wire	TPU	IP 67	DOL-1204-W02M	6009383
			5 m, 4-wire	TPU	IP 67	DOL-1204-W05M	6009867

Female connector (ready to assemble)

Figure	Connection type head A	Connection type head B	Connector material	Enclosure rating	Model name	Part no.
	Female connector, M8, 4-pin, straight	Screw-type terminals	PBT	IP 67	DOS-0804-G	6009974
	Female connector, M8, 4-pin, angled	Pin penetration	PBT	IP 67	DOS-0804-W	6009975
	Female connector, M12, 4-pin, straight	Screw-type terminals	PBT	IP 67	DOS-1204-G	6007302
	Female connector, M12, 4-pin, angled	Screw-type terminals	PBT	IP 67	DOS-1204-W	6007303

Male connector (ready to assemble)

Figure	Connection type head A	Connection type head B	Connector material	Enclosure rating	Model name	Part no.
	Male connector, M12, 4-pin, straight	Screw-type terminals	PBT	IP 67	STE-1204-G	6009932
	Male connector, M12, 4-pin, angled	Screw-type terminals	PBT	IP 67	STE-1204-W	6022084

Masks

Figure	Description	Model name	Part no.
	Mask card, vertical/horizontal slots, slot width: 0.5 mm / 1.0 mm / 1.5 mm / 2.0 mm	BL-9-2	4033253

G

Universal bar clamp systems

Figure	Material	Description	Model name	Part no.
	Zinc plated steel (sheet), Diecast zinc (clamp)	Plate N02 for universal clamp bracket	BEF-KHS-N02	2051608
		Plate N08 for universal clamp bracket	BEF-KHS-N08	2051607

Reflectors

Angular

Figure	Material	Description	Model name	Part no.
	PMMA/ABS	Rectangular, screw connection, 80 mm x 80 mm	PL80A	1003865

Fine triple reflectors

Figure	Material	Description	Model name	Part no.
	PMMA/ABS	Fine triple, screw connection, suitable for laser sensors, 47 mm x 47 mm	P250F	5308843
		Fine triple, screw connection, suitable for laser sensors, 18 mm x 18 mm	PL10F	5311210
	Plastic	Fine triple, chemically resistant, screw connection, 18 mm x 18 mm	PL10F CHEM	5321636
	PMMA/ABS	Fine triple, screw connection, suitable for laser sensors, 38 mm x 16 mm	PL20F	5308844
	Plastic	Fine triple, chemically resistant, screw connection, suitable for laser sensors, 16 mm x 38 mm	PL20F-CHEM	5326089
	PMMA/ABS	Fine triple, screw connection, suitable for laser sensors, 56 mm x 28 mm	PL30F	5326523
		Fine triple, screw connection, suitable for laser sensors, 76 mm x 45 mm	PL81-1F	5325060

Reflective tape

Figure	Description	Model name	Part no.
	Suitable for laser sensors, self-adhesive, cut, see alignment note, 56.3 mm x 56.3 mm	REF-AC1000-56	4063030

G

Special reflectors

Figure	Material	Description	Model name	Part no.
	Stainless steel V4A (1.4404, 316L)	Stainless steel reflector, hygienic design, chemically resistant, Enclosure rating IP 69K, D12-adapter shaft, 25 mm x 25 mm	PLH25-D12	2063404
		Stainless steel reflector, hygienic design, chemically resistant, Enclosure rating IP 69K, M12-adapter thread, 25 mm x 25 mm	PLH25-M12	2063403
		Stainless steel reflector, wash-down design, chemically resistant, Enclosure rating IP 69K, screw connection, 14 mm x 14 mm	PLV14-A	2063405

→ **For additional accessories, please see page L-861**

G

Laser precision in a rugged VISTAL™ housing

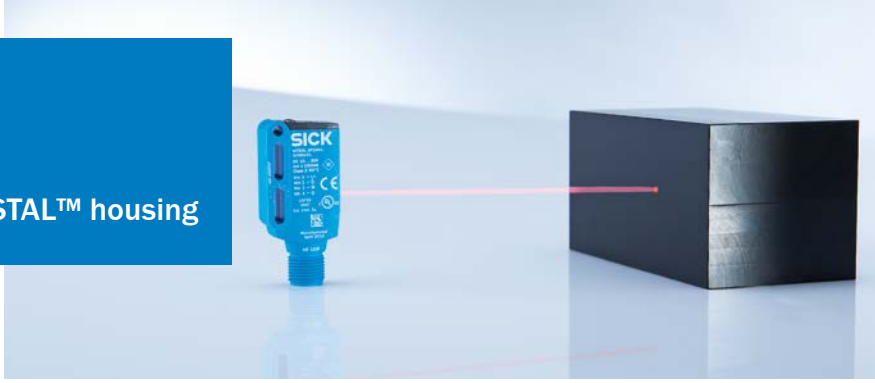

G

Product description

Precise detection of small objects and object features. Reliable for use in harsh industrial environments. The W9L-3 laser photoelectric sensor offers a wider range of solutions than ever before. It is a complete product family, including photoelectric proximity sensors, photoelectric retro-reflective sensors and through-beam photoelectric switches. All sensors are equipped with the latest laser technology, protected by a rugged VISTAL™ housing – for even stronger mechanical resistance and reliability. The W9L-3 range works using SICK's optimized ASIC technology; optical and electromagnetic interference is effectively suppressed for safe switching behavior in any environment. With its various connection, mounting and sensing options, the W9L-3 sensor family can solve a variety of application needs in the automation environment.

At a glance

- Tough VISTAL™ housing
- Precise laser light spot
- Photoelectric proximity sensor in laser classes 1 and 2
- Photoelectric retro-reflective sensor with autocollimation optics and polarizing filter; models available for clear material detection
- Through-beam photoelectric sensors with sensing ranges of up to 60 m
- SIRIC technology
- Connections: M8 and M12 plugs, cable as well as cable with plug
- M3 and M4 hole pattern

Your benefits

- Precise detection of small objects and object features
- Detection of objects even through small openings
- Less machine downtime due to stable VISTAL™ housing as well as the suppression of optical interference
- The longest detection and sensing ranges in its class
- Best-in-class background suppression for photoelectric proximity sensors
- No blind spots, detection of shiny objects using photoelectric retro-reflective sensors
- A wide variety of connection and mounting options
- Highly visible light spot simplifies alignment

Additional information

→ **www.mysick.com/en/W9L-3**

For more information, just enter the link or scan the QR code and get direct access to technical data, CAD design models, operating instructions, software, application examples and much more.

Detailed technical data

Features

	WTB9L-3	WTB9M4L-3	WL9L-3	WL9M4L-3	WSE9L-3
Sensor principle	Photoelectric proximity sensor		Photoelectric retro-reflective sensor		Through-beam photoelectric sensor
Detection principle	Background suppression		Autocollimation		–
Dimensions (W x H x D)	12.2 mm x 50 mm x 23.6 mm/12.2 mm x 49.8 mm x 23.6 mm 12.2 mm x 52.2 mm x 23.6 mm (depending on type)				
Housing design (light emission)	Rectangular				
Mounting hole	M3	M4	M3	M4	M3
Sensing range max.	25 mm ... 400 mm [1] (depending on type)		0 m ... 12 m [2]		0 m ... 60 m
Sensing range	25 mm ... 400 mm [1] (depending on type)		0 m ... 8 m [2]		0 m ... 50 m
Type of light	Visible red light				
Light source [3]	Laser				
Wave length	650 nm				
Laser class [4]	1/2 (depending on type)		1		
Adjustment	Potentiometer, 5 turns		Single teach-in button		

[1] Object with 90 % reflectance (referred to standard white, DIN 5033)
[2] PL80A.
[3] Average service life 50,000 h at T_A = +25 °C.
[4] (IEC 60825-1/CDRH 21 CFR 1040.10 & 1040.11)

Mechanics/electronics

	WTB9L-3	WTB9M4L-3	WL9L-3	WL9M4L-3	WSE9L-3
Supply voltage [1]	10 V DC ... 30 V DC				
Ripple [2]	< 5 V_{pp}				
Power consumption [3]	≤ 30 mA				
Output type [4]	PNP/NPN (depending on type)				
Output function	Complementary				
Switching mode [4]	Light/dark-switching				
Output current $I_{max.}$	≤ 100 mA				
Connection type	Cable, 2 m [5]/Male connector, M8/Male connector, M12/ Cable with connector, M12, 120 mm [5] (depending on type)				
Circuit protection	A [6], B [7], C [8]				
Protection class	III				
Weight					
Connector	13 g				
Cable/cable with connector	80 g				
Polarisation filter	–		✔		–
Housing material	VISTAL™				

G

	WTB9L-3	WTB9M4L-3	WL9L-3	WL9M4L-3	WSE9L-3
Optics material	PMMA				
Enclosure rating	IP 66/IP 67/IP 69K				
Ambient operating temperature	–10 °C ... +50 °C				
Ambient operating temperature extended [11] [12]	–30 °C ... +55 °C				
Ambient storage temperature	–30 °C ... +70 °C				

[1] Limit values, operation in short-circuit protected network max. 8 A.

[2] May not exceed or fall short of V_S tolerances.

[3] Without load.

[4] Q = light-switching.

[5] Do not bend below 0 °C.

[6] A = V_S connections reverse-polarity protected.

[7] B = inputs and output reverse-polarity protected.

[8] C = interference suppression.

[9] As of T_a = 50 °C, a max. supply voltage $V_{max.}$ = 24 V and a max. load current $I_{max.}$ = 50 mA is permitted.

[10] Using the sensor below T_a = –10 °C is possible, if the sensor is turned on at T_a > –10 °C, then the environment cools down and the sensor is not disconnected from the supply voltage during the whole time. It is not allowed to turn on the sensor below T_a = –10 °C.

Ordering information

Other models available at www.mysick.com/en/W9L-3

WTB9L-3

- **Mounting hole:** M3
- **Switching mode:** light/dark-switching (Q = light-switching.)
- **Adjustment:** potentiometer, 5 turns

Laser class	Sensing range max. [1]	Light spot size (distance)	Switching frequency [2]/Response time [3]	Output type	Connection	Connection diagram	Model name	Part no.
1	25 mm ... 300 mm	Ø 1 mm (170 mm)	1,000 Hz/ ≤ 0.5 ms	PNP	Cable, 4-wire, 2 m, PVC	Cd-095	WTB9L-3P1161	1058232
					Connector M8, 4-pin	Cd-083	WTB9L-3P2261	1058230
					Connector M12, 4-pin	Cd-083	WTB9L-3P2461	1058231
					Cable with connector M12, 4-pin, 120 mm, PVC	Cd-083	WTB9L-3P3461	1058916
				NPN	Connector M8, 4-pin	Cd-083	WTB9L-3N2261	1062523
					Connector M12, 4-pin	Cd-083	WTB9L-3N2461	1062524
					Cable with connector M12, 4-pin, 120 mm, PVC	Cd-083	WTB9L-3N3461	1062525
2	25 mm ... 400 mm	Ø 0.9 mm (230 mm)	500 Hz/ ≤ 1 ms	PNP	Connector M8, 4-pin	Cd-083	WTB9L-3P2291	1058150
					Connector M12, 4-pin	Cd-083	WTB9L-3P2491	1058151
					Cable with connector M12, 4-pin, 120 mm, PVC	Cd-083	WTB9L-3P3491	1058153
				NPN	Connector M8, 4-pin	Cd-083	WTB9L-3N2291	1058146
					Connector M12, 4-pin	Cd-083	WTB9L-3N2491	1058149
					Cable with connector M12, 4-pin, 120 mm, PVC	Cd-083	WTB9L-3N3491	1058152

[1] Object with 90 % reflectance (referred to standard white, DIN 5033)

[7] With light/dark ratio 1:1.

[6] Signal transit time with resistive load.

WTB9M4L-3

- **Mounting hole:** M4
- **Switching mode:** light/dark-switching (Q = light-switching.)
- **Adjustment:** potentiometer, 5 turns

Laser class	Sensing range max. [1]	Light spot size (distance)	Switching frequency [2]/Response time [3]	Output type	Connection	Connection diagram	Model name	Part no.
1	25 mm ... 300 mm	Ø 1 mm (170 mm)	1.000 Hz/ ≤ 0,5 ms	PNP	Cable, 4-wire, 2 m, PVC	Cd-095	WTB9M4L-3P1161	1058188
					Connector M8, 4-pin	Cd-083	WTB9M4L-3P2261	1058186
					Connector M12, 4-pin	Cd-083	WTB9M4L-3P2461	1058187
2	25 mm ... 400 mm	Ø 0.9 mm (230 mm)	500 Hz/ ≤ 1 ms	PNP	Cable, 4-wire, 2 m, PVC	Cd-095	WTB9M4L-3P1191	1058226
					Connector M8, 4-pin	Cd-083	WTB9M4L-3P2291	1058224
					Connector M12, 4-pin	Cd-083	WTB9M4L-3P2491	1058225

[1] Object with 90 % reflectance (referred to standard white, DIN 5033)
[7] With light/dark ratio 1:1.
[6] Signal transit time with resistive load.

WL9L-3

- **Mounting hole:** M3
- **Switching mode:** light/dark-switching (Q = light-switching.)
- **Adjustment:** single teach-in button

Laser class	Sensing range max. [1]	Light spot size (distance)	Switching frequency [2]/Response time [3]	Output type	Connection	Connection diagram	Model name	Part no.
1	0 m ... 12 m	Ø 1 mm (500 mm)	1,000 Hz/ ≤ 0.5 ms	PNP	Cable, 4-wire, 2 m, PVC	Cd-095	WL9L-3P1132	1058233
					Connector M8, 4-pin	Cd-083	WL9L-3P2232	1058174
					Connector M12, 4-pin	Cd-083	WL9L-3P2432	1058175
					Cable with connector M12, 4-pin, 120 mm, PVC	Cd-083	WL9L-3P3432	1058176
				NPN	Connector M8, 4-pin	Cd-083	WL9L-3N2232	1058172
					Connector M12, 4-pin	Cd-083	WL9L-3N2432	1058173

[1] PL80A.
[7] With light/dark ratio 1:1.
[6] Signal transit time with resistive load.

WL9M4L-3

- **Mounting hole:** M4
- **Switching mode:** light/dark-switching (Q = light-switching.)
- **Adjustment:** single teach-in button

Laser class	Sensing range max. [1]	Light spot size (distance)	Switching frequency [2]/Response time [3]	Output type	Connection	Connection diagram	Model name	Part no.
1	0 m ... 12 m	Ø 1 mm (500 mm)	1,000 Hz/ ≤ 0.5 ms	PNP	Cable, 4-wire, 2 m, PVC	Cd-095	WL9M4L-3P1132	1058229
					Connector M8, 4-pin	Cd-083	WL9M4L-3P2232	1058227
					Connector M12, 4-pin	Cd-083	WL9M4L-3P2432	1058228

[1] PL80A.
[7] With light/dark ratio 1:1.
[6] Signal transit time with resistive load.

WSE9L-3

- **Mounting hole:** M3
- **Switching mode:** light/dark-switching (Q = light-switching.)
- **Adjustment:** single teach-in button

Laser class	Sensing range max. [1]	Light spot size (distance)	Switching frequency [2]/Response time [3]	Output type	Connection	Connection diagram	Model name	Part no.
1	0 m ... 60 m	Ø 1 mm (500 mm)	1,000 Hz/ ≤ 0.5 ms	PNP	Cable, 4-wire, 2 m, PVC	Cd-231	WSE9L-3P1137	1058915
					Connector M8, 4-pin	Cd-232	WSE9L-3P2237	1058182
					Connector M12, 4-pin	Cd-232	WSE9L-3P2437	1058181
				NPN	Connector M8, 4-pin	Cd-232	WSE9L-3N2237	1058179
					Connector M12, 4-pin	Cd-232	WSE9L-3N2437	1058180

Dimensional drawings

Dimensions in mm (inch)

WTB9L-3

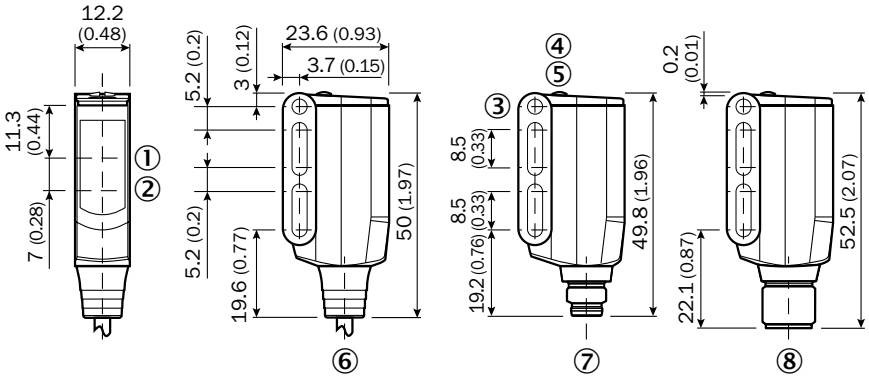

① Center of optical axis, receiver
② Center of optical axis, sender
③ Mounting hole M3 (Ø 3.1 mm)
④ LED indicator yellow: Light received
⑤ LED signal strength indicator green:power on
⑥ Connecting cable or connecting cable with connector
⑦ Connector M8, 4-pin
⑧ Connector M12, 4-pin

WTB9M4L-3

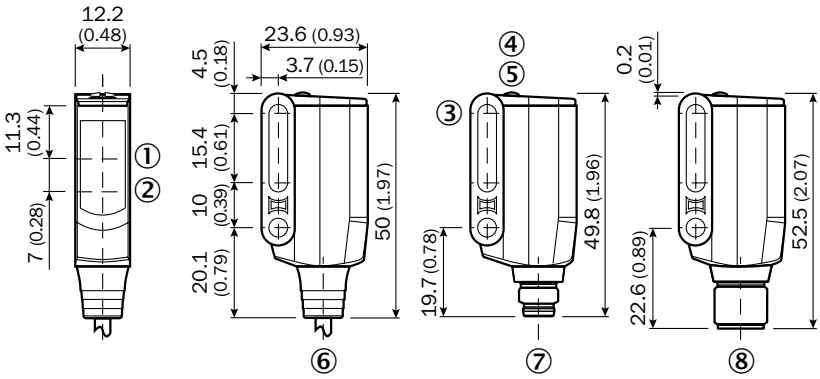

① Center of optical axis, receiver
② Center of optical axis, sender
③ Mounting hole M4 (Ø 4.1 mm)
④ LED indicator yellow: Light received
⑤ LED signal strength indicator green:power on
⑥ Connecting cable or connecting cable with connector
⑦ Connector M8, 4-pin
⑧ Connector M12, 4-pin

WL9L-3

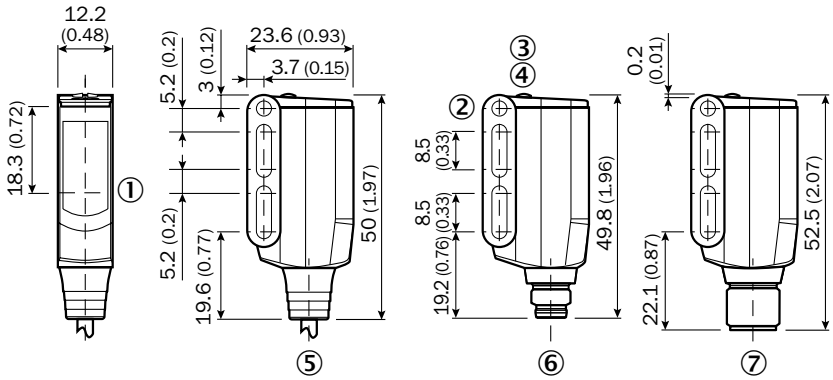

① Centre of optical axis, sender and receiver
② Mounting hole M3 (Ø 3.1 mm)
③ LED indicator yellow: Light received
④ LED signal strength indicator green:power on
⑤ Connecting cable or connecting cable with connector
⑥ Connector M8, 4-pin
⑦ Connector M12, 4-pin

WL9M4L-3

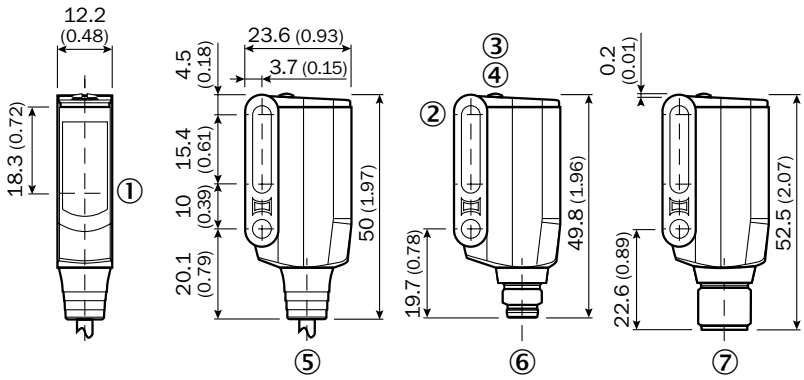

① Centre of optical axis, sender and receiver
② Mounting hole M4 (Ø 4.1 mm)
③ LED indicator yellow: Light received
④ LED signal strength indicator green:power on
⑤ Connecting cable or connecting cable with connector
⑥ Connector M8, 4-pin
⑦ Connector M12, 4-pin

WSE9L-3

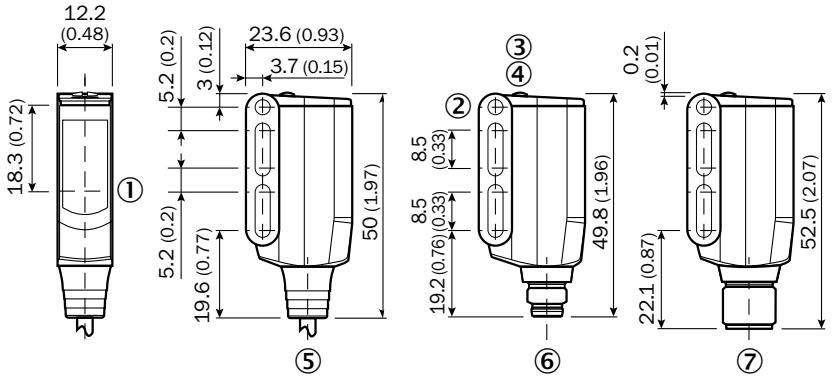

① Centre of optical axis, sender and receiver
② Mounting hole M3 (Ø 3.1 mm)
③ LED indicator yellow: Light received
④ LED signal strength indicator green:power on
⑤ Connecting cable or connecting cable with connector
⑥ Connector M8, 4-pin
⑦ Connector M12, 4-pin

Adjustments

Potentiometer

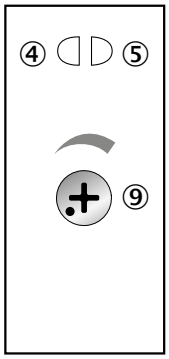

④ LED indicator yellow: Light received
⑤ LED signal strength indicator green:power on
⑨ Sensing range adjustment

Single teach-in button

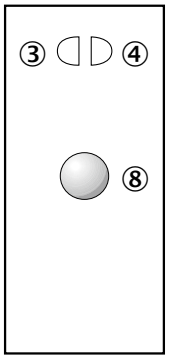

③ LED indicator yellow: Light received
④ LED signal strength indicator green:power on
⑧ Teach-in button

Characteristic curves

Black-white shift

WTB9L-3, laser class 1

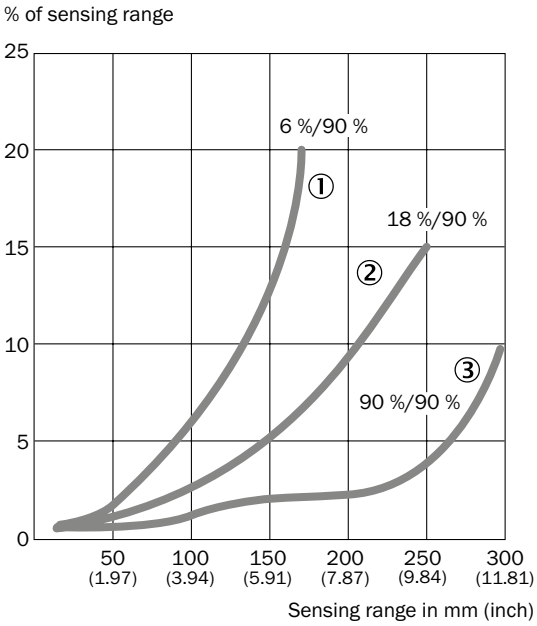

① Sensing range on black, 6 % remission
② Sensing range on gray, 18 % remission
③ Sensing range on white, 90 % remission

WTB9L-3, laser class 2

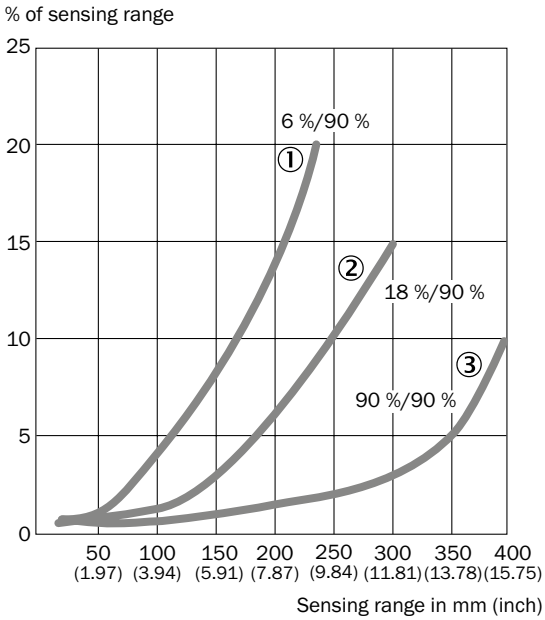

① Sensing range on black, 6 % remission
② Sensing range on gray, 18 % remission
③ Sensing range on white, 90 % remission

G

Operating reserve

WL9L-3

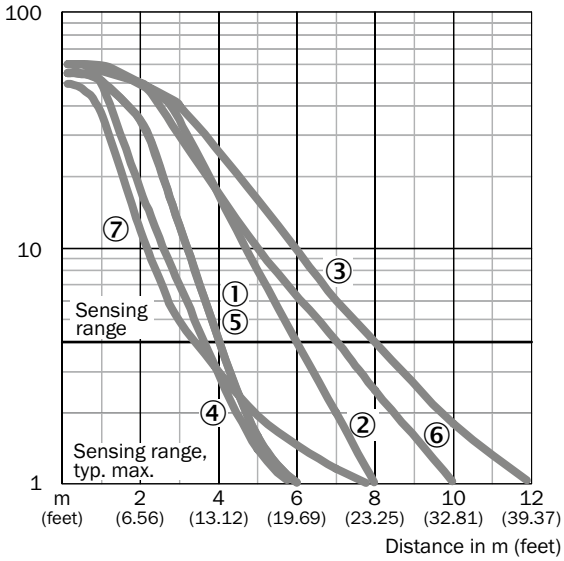

WSE9L-3

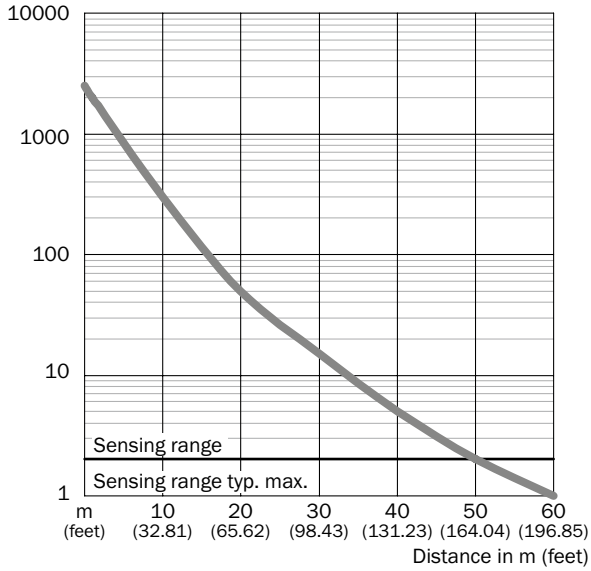

① PL20A
② PL40A
③ PL80A
④ PL10F
⑤ PL20F
⑥ P250F
⑦ REF-AC1000

Bar diagrams

G

WTB9L-3, laser class 1

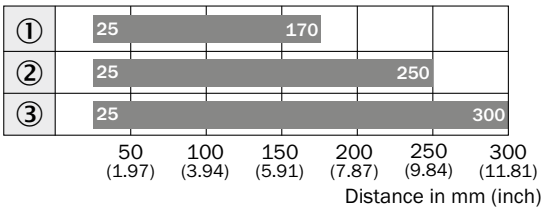

Sensing range typ. max.

① Sensing range on black, 6 % remission
② Sensing range on gray, 18 % remission
③ Sensing range on white, 90 % remission

WTB9L-3, laser class 2

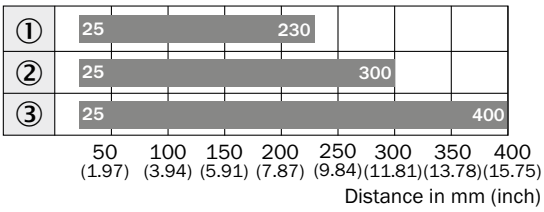

Sensing range typ. max.

① Sensing range on black, 6 % remission
② Sensing range on gray, 18 % remission
③ Sensing range on white, 90 % remission

WL9L-3

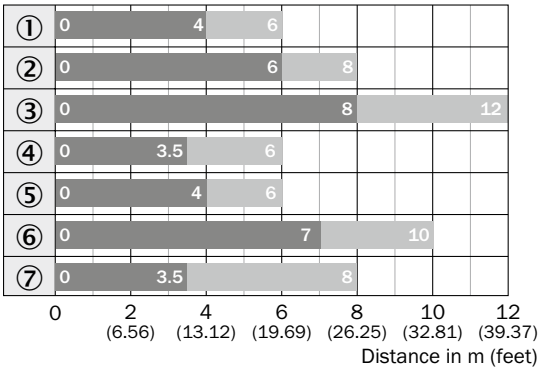

Sensing range Sensing range typ. max.

① PL20A
② PL40A
③ PL80A
④ PL10F
⑤ PL20F
⑥ P250F
⑦ REF-AC1000

WSE9L-3

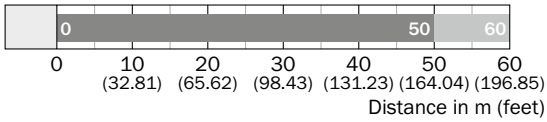

Sensing range Sensing range typ. max.

Light spot diameter

WTB9L-3, laser class 1

Radius in mm (inch)

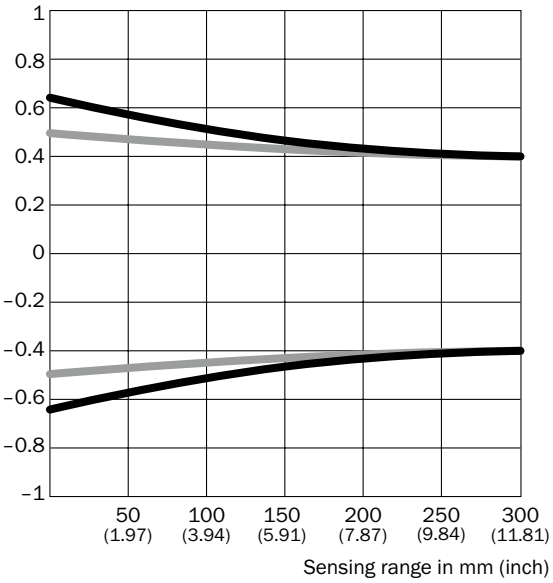

Dimensions in mm (inch)

Sensing range	Vertical	Horizontal
50 mm (1.97)	1.2 (0.05)	1.0 (0.04)
100 mm (3.94)	1.1 (0.04)	1.0 (0.04)
200 mm (7.87)	0.9 (0.04)	0.9 (0.04)
300 mm (11.81)	0.8 (0.03)	0.8 (0.03)

Vertical
Horizontal

G

WTB9L-3, laser class 2

Radius in mm (inch)

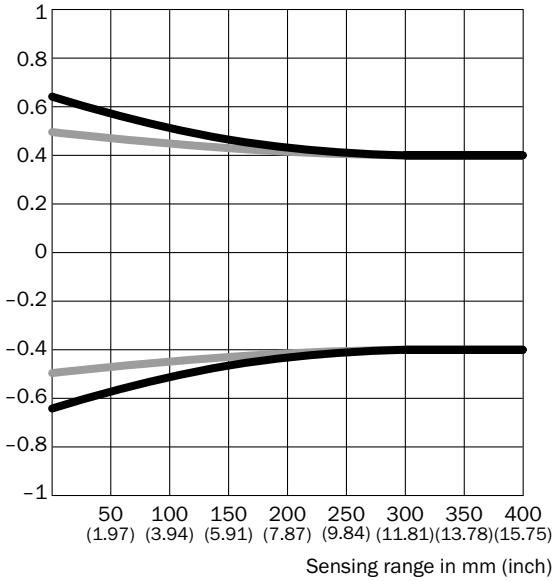

Dimensions in mm (inch)

Sensing range	Vertical	Horizontal
50 mm (1.97)	1.2 (0.05)	1.0 (0.04)
100 mm (3.94)	1.1 (0.04)	1.0 (0.04)
200 mm (7.87)	0.9 (0.04)	0.9 (0.04)
400 mm (15.75)	0.8 (0.03)	0.8 (0.03)

WL9-3, Overview

Radius in mm (inch)

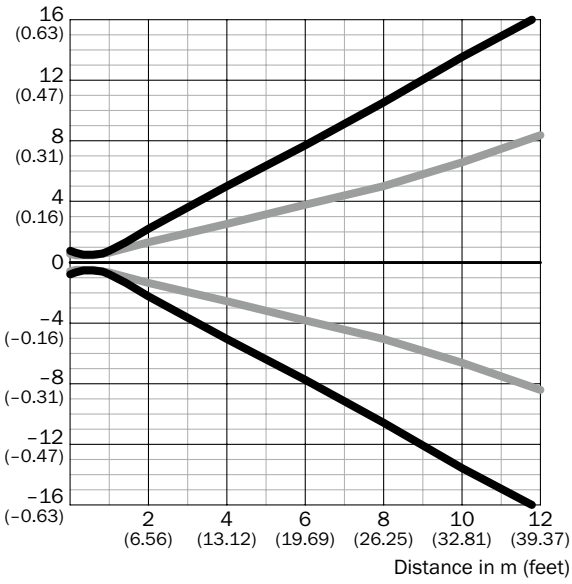

Dimensions in mm (inch)

Sensing range	Vertical	Horizontal
0.5 m (1.64 feet)	< 1.0 (0.04)	< 1.0 (0.04)
1 m (3.28 feet)	1.5 (0.06)	1.2 (0.05)
6 m (19.69 feet)	15.2 (0.60)	7.6 (0.30)
12 m (39.37 feet)	32.4 (1.28)	16.4 (0.65)

G

WL9L-3 close up near range

Radius in mm (inch)

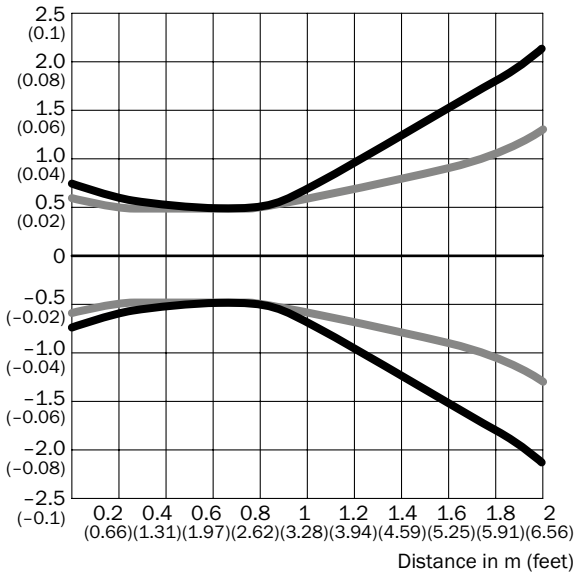

Vertical
Horizontal

WSE9L-3 overview

Radius in mm (inch)

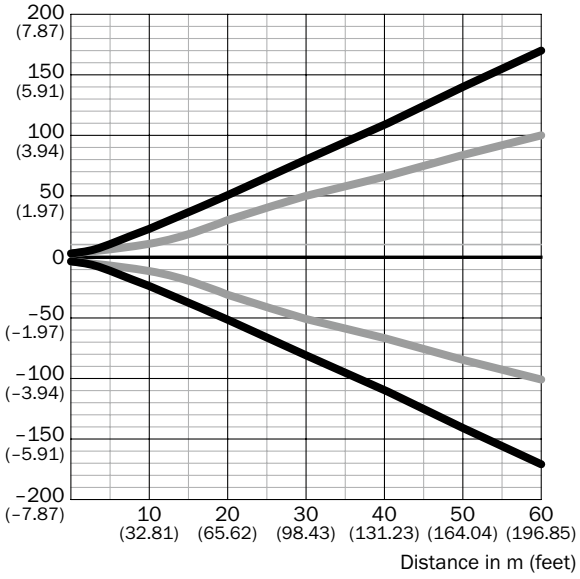

Dimensions in mm (inch)

Sensing range	Vertical	Horizontal
0.5 m (1.64 feet)	< 1.0 (0.04)	< 1.0 (0.04)
1 m (3.28 feet)	1.5 (0.06)	1.2 (0.05)
5 m (16.40 feet)	15 (0.59)	11 (0.43)
10 m (32.81 feet)	45 (1.77)	28 (1.10)
60 m (196.85 feet)	336 (13.23)	200 (7.87)

Vertical
Horizontal

WSE9L-3 close up near range

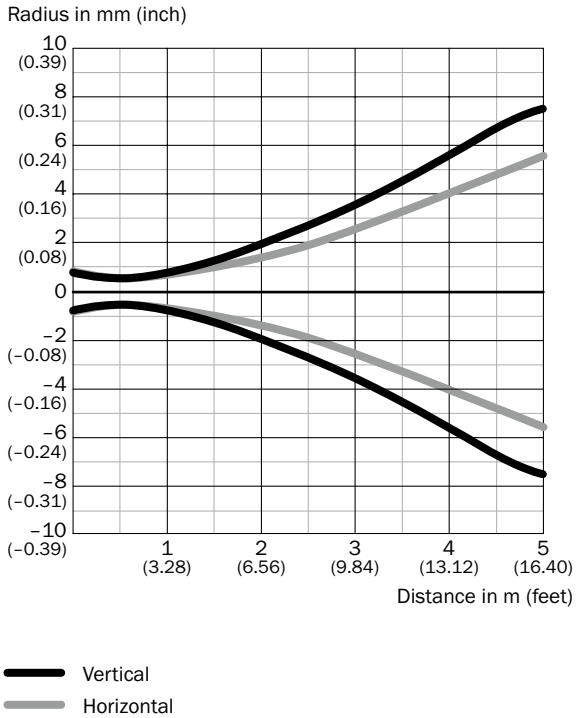

Connection diagram

Cd-083

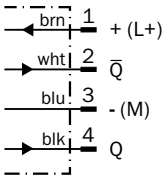

Cd-095

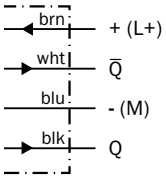

Cd-231

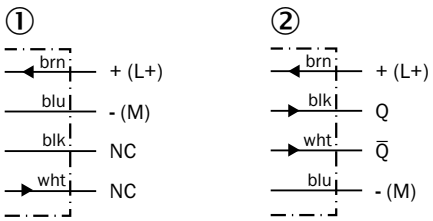

① Sender
② Receiver

Cd-232

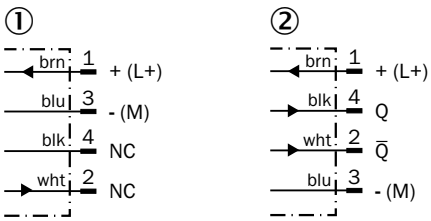

① Sender
② Receiver

G

Recommended accessories

Mounting brackets/plates

Mounting brackets

Figure	Material	Description	Model name	Part no.
	Steel, zinc coated	Mounting bracket for wall mounting	BEF-W160	5305197
		Mounting bracket	BEF-WN-W9-2	2022855

Mounting plates

Figure	Material	Description	Model name	Part no.
	PMMA, Brass (Br)	Fastening plate with threaded sleeve M3	BEF-GPM3-W9	4066039

Plug connectors and cables

Connecting cable (female connector-open)

- **Cable material:** PVC

Figure	Connection type head A	Connection type head B	Connecting cable	Connector material	Enclosure rating	Model name	Part no.
	Female connector, M8, 4-pin, straight	Cable, open conductor heads	2 m, 4-wire	PVC	IP 67	DOL-0804-G02M	6009870
			5 m, 4-wire	PVC	IP 67	DOL-0804-G05M	6009872
	Female connector, M8, 4-pin, angled	Cable, open conductor heads	2 m, 4-wire	PVC	IP 67	DOL-0804-W02M	6009871
			5 m, 4-wire	PVC	IP 67	DOL-0804-W05M	6009873
	Female connector, M12, 4-pin, straight	Cable, open conductor heads	2 m, 4-wire	TPU	IP 67	DOL-1204-G02M	6009382
			5 m, 4-wire	TPU	IP 67	DOL-1204-G05M	6009866
	Female connector, M12, 4-pin, angled	Cable, open conductor heads	2 m, 4-wire	TPU	IP 67	DOL-1204-W02M	6009383
			5 m, 4-wire	TPU	IP 67	DOL-1204-W05M	6009867

Female connector (ready to assemble)

Figure	Connection type head A	Connection type head B	Connector material	Enclosure rating	Model name	Part no.
	Female connector, M8, 4-pin, straight	Screw-type terminals	PBT	IP 67	DOS-0804-G	6009974
	Female connector, M8, 4-pin, angled	Screw-type terminals	PBT	IP 67	DOS-0804-W	6009975
	Female connector, M12, 4-pin, straight	Screw-type terminals	PBT	IP 67	DOS-1204-G	6007302
	Female connector, M12, 4-pin, angled	Screw-type terminals	PBT	IP 67	DOS-1204-W	6007303

G

Universal bar clamp systems

Figure	Material	Description	Model name	Part no.
	Zinc diecast	Universal bar clamp for mounting bars with 12 mm diameter	BEF-KHS-KH3	5322626
	Zinc plated steel (sheet), Diecast zinc (clamp)	Plate N02 for universal clamp bracket	BEF-KHS-N02	2051608
		Plate N08 for universal clamp bracket	BEF-KHS-N08	2051607

Reflectors

Angular

Figure	Material	Description	Model name	Part no.
	PMMA/ABS	Rectangular, screw connection, 80 mm x 80 mm	PL80A	1003865

Fine triple reflectors

Figure	Material	Description	Model name	Part no.
	PMMA/ABS	Fine triple, screw connection, suitable for laser sensors, 47 mm x 47 mm	P250F	5308843
		Fine triple, self-adhesive, suitable for laser sensors, Ø 23 mm	P25F-1	5319385
		Reflector with microprismatic reflex tape REF-AC1000, suitable for laser sensors, see alignment note, 23 mm x 23 mm	P41F	5315128
		Fine triple, screw connection, suitable for laser sensors, 18 mm x 18 mm	PL10F	5311210
		Fine triple, screw connection, suitable for laser sensors, 38 mm x 16 mm	PL20F	5308844
		Fine triple, screw connection, suitable for laser sensors, 56 mm x 28 mm	PL30F	5326523
		Fine triple, screw connection, suitable for laser sensors, 76 mm x 45 mm	PL81-1F	5325060

Reflective tape

Figure	Description	Model name	Part no.
	Suitable for laser sensors, self-adhesive, cut, see alignment note, 56.3 mm x 56.3 mm	REF-AC1000-56	4063030

→ **For additional accessories, please see page L-861**

G

G

Laser precision in a rugged VISTAL™ housing for clear material detection

Product description

Precise detection of small objects and object features. Reliable even in harsh industrial environments. Equipped with the latest laser technology as well as offering continuous switching threshold adjustment (CTA), the WL9LG-3 photoelectric retro-reflective sensor is the ideal solution for detecting transparent materials. The innovative technology is protected by a rugged VISTAL™ housing – for even stronger mechanical resistance and reliability. The WL9LG-3 range works using SICK's optimized ASIC technology, optical and electromagnetic interference is effectively suppressed for safe switching behavior in any environment. With various connection, mounting and sensing options, the WL9LG-3 sensor family is the ideal solution for a variety of application needs in the automation environment.

At a glance

- Tough VISTAL™ housing
- Precise laser light spot, laser class 1
- Continuous switching threshold adjustment (CTA)
- Autocollimation optics and polarizing filter
- Teach-in
- SIRIC technology
- Connections: M8 and M12 plugs, cable as well as cable with plug
- M3 and M4 hole pattern

Your benefits

- Precise detection of small objects and object features
- Detection of objects even through small openings
- Best-in-class for detecting transparent objects
- Less machine downtime thanks to the stable VISTAL™ housing
- No blind spots, also detects shiny objects
- Wide range of connection options
- Multiple mounting options
- Highly visible light spot simplifies alignment

Additional information

→ **www.mysick.com/en/W9LG-3**

For more information, just enter the link or scan the QR code and get direct access to technical data, CAD design models, operating instructions, software, application examples and much more.

Detailed technical data

Features

Sensor principle	Photoelectric retro-reflective sensor
Detection principle	Autocollimation
Dimensions (W x H x D)	12.2 mm x 50 mm x 23.6 mm/12.2 mm x 49.8 mm x 23.6 mm/ 12.2 mm x 52.2 mm x 23.6 mm (depending on type)
Housing design (light emission)	Rectangular
Mounting hole	M3
Sensing range max. [1]	0 m ... 4.5 m
Sensing range [1]	0 m ... 2 m
Type of light	Visible red light
Light source [2]	Laser
Light spot size (distance)	Ø 1 mm (500 mm)
Wave length	650 nm
Laser class [3]	1
Adjustment	Single teach-in button
Continuous threshold adaption	✔
Special feature	Detection of transparent objects

[1] REF-AC1000.
[2] Average service life 50,000 h at T_A = +25 °C.
[3] IEC 60825-1/CDRH 21 CFR 1040.10 & 1040.11.

Mechanics/electronics

Supply voltage [1]	10 V DC ... 30 V DC
Ripple	< 5 V_{pp}
Power consumption [2]	≤ 30 mA
Output type [3]	PNP
Output function	Complementary
Switching mode [3]	Light/dark-switching
Output current $I_{max.}$	≤ 100 mA
Response time [4]	≤ 0.5 ms
Switching frequency [5]	1,000 Hz
Connection type	Cable, 2 m [6]/Male connector, M8/Male connector, M12 (depending on type)
Circuit protection	A [7], B [8], C [9]
Protection class	III
Weight	
Connector	13 g
Cable/cable with connector	80 g
Polarisation filter	✔
Housing material	VISTAL
Optics material	PMMA

G

Enclosure rating	IP 66/IP 67/IP 69K
Ambient operating temperature	–10 °C ... +50 °C
Ambient operating temperature extended [10) 11)]	–30 °C ... +55 °C
Ambient storage temperature	–30 °C ... +70 °C

[1)] Limit values, operation in short-circuit protected network max. 8 A.

[2)] Without load.

[3)] Q = light-switching.

[4)] Signal transit time with resistive load.

[5)] With light/dark ratio 1:1.

[6)] Do not bend below 0 °C.

[7)] A = V_S connections reverse-polarity protected.

[8)] B = inputs and output reverse-polarity protected.

[9)] C = interference suppression.

[10)] As of T_a = 50 °C, a max. supply voltage $V_{max.}$ = 24 V and a max. load current $I_{max.}$ = 50 mA is permitted.

[11)] Using the sensor below T_a = –10 °C is possible, if the sensor is turned on at T_a > –10 °C, then the environment cools down and the sensor is not disconnected from the supply voltage during the whole time. It is not allowed to turn on the sensor below T_a = –10 °C.

Ordering information

Other models available at www.mysick.com/en/W9LG-3

WL9LG-3

- **Laser class:** 1
- **Light spot size (distance):** Ø 1 mm (500 mm)
- **Mounting hole:** M3
- **Output type:** PNP
- **Switching mode:** light/dark-switching (Q = light-switching.)
- **Adjustment:** single teach-in button

G

Sensing range max. [1)]	Connection	Connection diagram	Model name	Part no.
0 m ... 4.5 m	Cable, 4-wire, 2 m, PVC	Cd-095	WL9LG-3P1132	1058236
	Connector M8, 4-pin	Cd-083	WL9LG-3P2232	1058234
	Connector M12, 4-pin	Cd-083	WL9LG-3P2432	1058235

[1)] REF-AC1000.

Dimensional drawings

Dimensions in mm (inch)

WL9LG-3

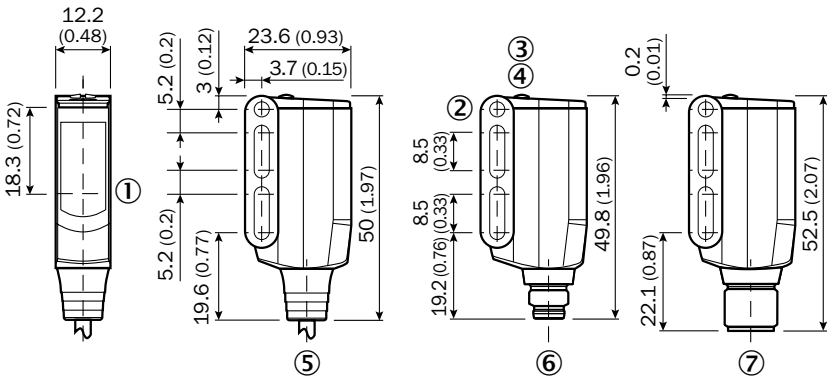

① Centre of optical axis, sender and receiver
② Mounting hole M3 (Ø 3.1 mm)
③ LED indicator yellow: Light received
④ LED signal strength indicator green:power on
⑤ Connecting cable or connecting cable with connector
⑥ Connector M8, 4-pin
⑦ Connector M12, 4-pin

Adjustments

Single teach-in button

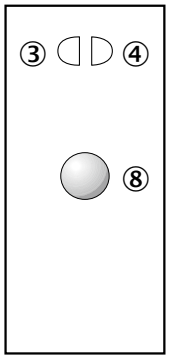

③ LED indicator yellow: Light received
④ LED signal strength indicator green:power on
⑧ Teach-in button

Characteristic curves

Operating reserve

WL9LG-3

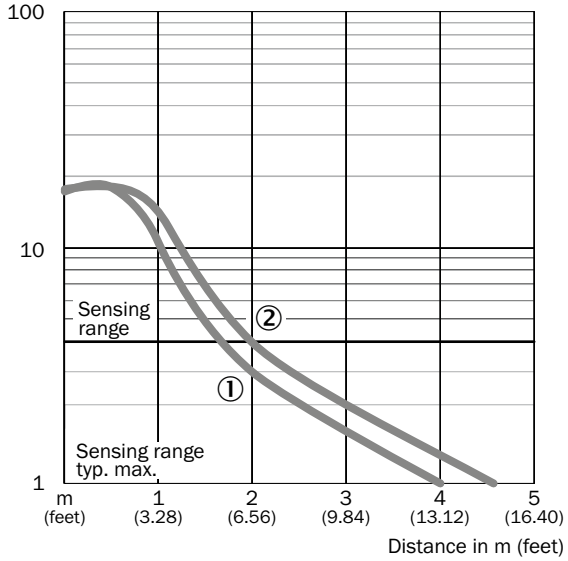

① PLV14-A / PLH25-M12 / PLH25-D12
② P41F / REF-AC1000

Light spot diameter

Overview

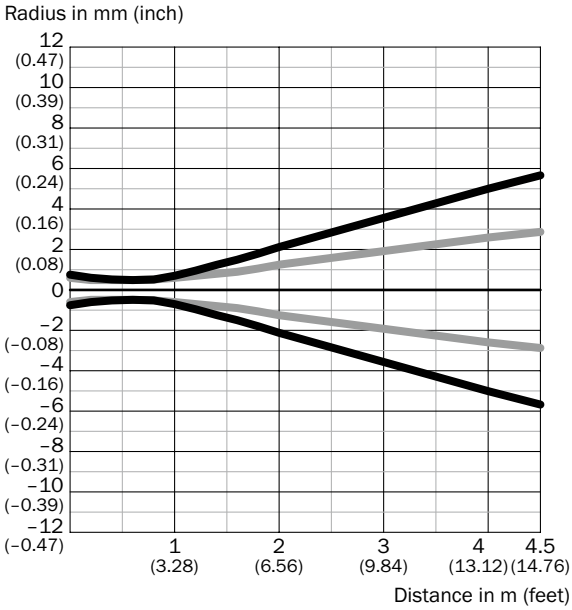

Dimensions in mm (inch)

Sensing range	Vertical	Horizontal
0.5 m (1.64 feet)	< 1.0 (0.04)	< 1.0 (0.04)
1 m (3.28 feet)	1.5 (0.06)	1.2 (0.05)
2 m (6.56 feet)	4.3 (0.17)	2.6 (0.10)
4.5 m (14.76 feet)	11.3 (0.44)	5.6 (0.22)

Vertical
Horizontal

G

WL9LG-3, close up near range

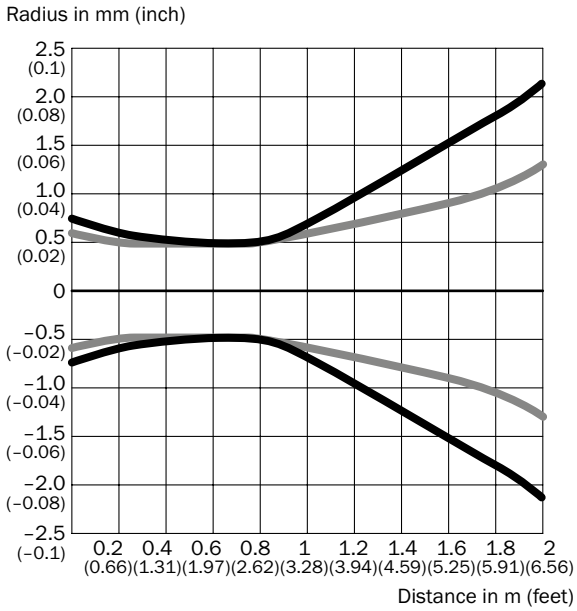

Connection diagram

Cd-083

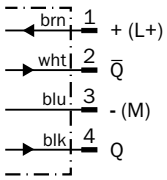

Cd-095

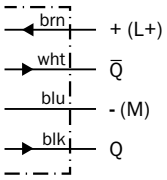

G

Recommended accessories

Mounting brackets/plates

Mounting brackets

Figure	Material	Description	Model name	Part no.
	Steel, zinc coated	Mounting bracket	BEF-WN-W9-2	2022855

Mounting plates

Figure	Material	Description	Model name	Part no.
	PMMA, Brass (Br)	Fastening plate with threaded sleeve M3	BEF-GPM3-W9	4066039

Plug connectors and cables

Connecting cable (female connector-open)

- **Cable material:** PVC

Figure	Connection type head A	Connection type head B	Connecting cable	Connector material	Enclosure rating	Model name	Part no.
	Female connector, M8, 4-pin, straight	Cable, open conductor heads	2 m, 4-wire	PVC	IP 67	DOL-0804-G02M	6009870
			5 m, 4-wire	PVC	IP 67	DOL-0804-G05M	6009872
	Female connector, M8, 4-pin, angled	Cable, open conductor heads	2 m, 4-wire	PVC	IP 67	DOL-0804-W02M	6009871
			5 m, 4-wire	PVC	IP 67	DOL-0804-W05M	6009873
	Female connector, M12, 4-pin, straight	Cable, open conductor heads	2 m, 4-wire	TPU	IP 67	DOL-1204-G02M	6009382
			5 m, 4-wire	TPU	IP 67	DOL-1204-G05M	6009866
	Female connector, M12, 4-pin, angled	Cable, open conductor heads	2 m, 4-wire	TPU	IP 67	DOL-1204-W02M	6009383
			5 m, 4-wire	TPU	IP 67	DOL-1204-W05M	6009867

Female connector (ready to assemble)

Figure	Connection type head A	Connection type head B	Connector material	Enclosure rating	Model name	Part no.
	Female connector, M8, 4-pin, straight	Screw-type terminals	PBT	IP 67	DOS-0804-G	6009974
	Female connector, M8, 4-pin, angled	Pin penetration	PBT	IP 67	DOS-0804-W	6009975
	Female connector, M12, 4-pin, straight	Screw-type terminals	PBT	IP 67	DOS-1204-G	6007302
	Female connector, M12, 4-pin, angled	Screw-type terminals	PBT	IP 67	DOS-1204-W	6007303

G

Universal bar clamp systems

Figure	Material	Description	Model name	Part no.
	Zinc diecast	Universal bar clamp for mounting bars with 12 mm diameter	BEF-KHS-KH3	5322626
	Zinc plated steel (sheet), Diecast zinc (clamp)	Plate N02 for universal clamp bracket	BEF-KHS-N02	2051608
		Plate N08 for universal clamp bracket	BEF-KHS-N08	2051607

Reflectors

Angular

Figure	Material	Description	Model name	Part no.
	PMMA/ABS	Rectangular, screw connection, 80 mm x 80 mm	PL80A	1003865

Fine triple reflectors

Figure	Material	Description	Model name	Part no.
	PMMA/ABS	Fine triple, screw connection, suitable for laser sensors, 47 mm x 47 mm	P250F	5308843
		Fine triple, screw connection, suitable for laser sensors, 18 mm x 18 mm	PL10F	5311210
	Plastic	Fine triple, chemically resistant, screw connection, 18 mm x 18 mm	PL10F CHEM	5321636
	PMMA/ABS	Fine triple, screw connection, suitable for laser sensors, 38 mm x 16 mm	PL20F	5308844
	Plastic	Fine triple, chemically resistant, screw connection, suitable for laser sensors, 16 mm x 38 mm	PL20F-CHEM	5326089
	PMMA/ABS	Fine triple, screw connection, suitable for laser sensors, 56 mm x 28 mm	PL30F	5326523
		Fine triple, screw connection, suitable for laser sensors, 76 mm x 45 mm	PL81-1F	5325060

Reflective tape

Figure	Description	Model name	Part no.
	Suitable for laser sensors, self-adhesive, cut, see alignment note, 56.3 mm x 56.3 mm	REF-AC1000-56	4063030

G

Special reflectors

Figure	Material	Description	Model name	Part no.
	Stainless steel V4A (1.4404, 316L)	Stainless steel reflector, hygienic design, chemically resistant, Enclosure rating IP 69K, D12-adapter shaft, 25 mm x 25 mm	PLH25-D12	2063404
		Stainless steel reflector, hygienic design, chemically resistant, Enclosure rating IP 69K, M12-adapter thread, 25 mm x 25 mm	PLH25-M12	2063403
		Stainless steel reflector, wash-down design, chemically resistant, Enclosure rating IP 69K, screw connection, 14 mm x 14 mm	PLV14-A	2063405

→ **For additional accessories, please see page L-861**

G

High-performance photoelectric sensors with application flexibility in industrial environments

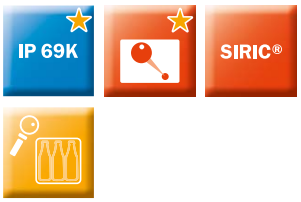

Product description

The W11-2 photoelectric sensor family offers a complete technology with high-performance sensing capabilities for a wide range of automation applications. Whether for applications in material handling or packaging, the W11-2 offers optimum performance in a small, rugged housing. These easy-to-use sensors provide dependable object detection and high reliability in industrial environments.

At a glance

- Uniform housing, mounting and connection systems
- Rugged sensors for industrial use
- PinPoint LED technology provides highly visible light spot
- Space-saving plastic housing in chemically, thermally or mechanically resistant designs
- Dovetail mounting – mounting holes and oblong holes
- Highly visible 360° status LEDs

Your benefits

- Reliable object detection due to superior ASIC technology with a high immunity to ambient light
- PinPoint technology provides a bright, small and precise light spot that enables quick and easy sensor alignment
- Precise switching characteristics ensure high performance even in changing application conditions
- Highly visible 360° status LEDs provide quick and easy setup
- Compact and rugged housing design easily fits in tight spaces
- Uniform housing, mounting and connection systems simplify installation
- Versatile mounting options, including dovetail, side mounting and standard mounting holes enable quick installation

Additional information

→ **www.mysick.com/en/W11-2**

For more information, just enter the link or scan the QR code and get direct access to technical data, CAD design models, operating instructions, software, application examples and much more.

G

Detailed technical data

Features

	WTB11-2	WTF11-2	WTE11-2	WL11-2	WSE11-2
Sensor principle	Photoelectric proximity sensor			Photoelectric retro-reflective sensor	Through-beam photoelectric sensor
Detection principle	Background suppression	Foreground suppression	Energetic	Standard optics	–
Dimensions (W x H x D)	15.6 mm x 48.5 mm x 42 mm				
Housing design (light emission)	Rectangular				
Sensing range max.	20 mm ... 1,100 mm [1] (depending on type)	35 mm ... 350 mm [1]	40 mm ... 1,000 mm [1]	0.05 m ... 10 m [2] (depending on type)	0 m ... 20 m
Sensing range	20 mm ... 800 mm (depending on type)	35 mm ... 350 mm	40 mm ... 600 mm	0.05 m ... 8 m [2] (depending on type)	0 m ... 15 m
Type of light	Visible red light				
Light source	LED [3] PinPoint LED [3] (depending on type)	LED [3]			
Angle of dispersion	–			Approx. 2.2°	Approx. 1.5°
Wave length	640 nm / 660 nm (depending on type)	640 nm	633 nm	640 nm	633 nm
Adjustment	Potentiometer, 5 turns		Single teach-in button		–

[1] Object with 90 % reflectance (referred to standard white, DIN 5033)

[2] PL80A.

[3] Average service life of 100,000 h at T_A = +25 °C.

G

Mechanics/electronics

	WTB11-2	WTF11-2	WTE11-2	WL11-2	WSE11-2
Supply voltage [1]	10 V DC ... 30 V DC				
Ripple [2]	≤ 5 V_{pp}				
Power consumption	≤ 40 mA [3]	≤ 30 mA [3]	≤ 40 mA [3]		–
Power consumption, sender	–				≤ 25 mA [3]
Power consumption, receiver	–				≤ 20 mA [3]
Output type	PNP/NPN (depending on type)	PNP	PNP/NPN (depending on type)		
Output function	Complementary				
Switching mode	Light/dark-switching				
Signal voltage PNP HIGH/LOW	Uv – 2.5 V / approx. 0 V				
Signal voltage NPN HIGH/LOW	Approx. V_S/< 2.5 V	–	Approx. VS / < 2.5 V		
Output current $I_{max.}$	100 mA				
Response time [4]	≤ 2.5 ms				
Switching frequency [5]	200 Hz				
Connection type	Cable, 2 m [6] Male connector, M12 (depending on type)	Male connector, M12	Cable, 2 m [6] Male connector, M12 (depending on type)		
Circuit protection	A [7]/C [8]/D [9]				
Protection class	II			II [10]	II

	WTB11-2	WTF11-2	WTE11-2	WL11-2	WSE11-2
Weight					
Connector	120 g				
Cable	200 g	–	200 g		
Polarisation filter	–			✔	–
Housing material	ABS				
Optics material	PMMA				
Enclosure rating	IP 66/IP 67 /IP 69K		IP 66/IP 67	IP 66/IP 67/IP 69K	
Test input sender off	–				TE to 0 V
Ambient operating temperature	–30 °C ... +60 °C				
Ambient storage temperature	–40 °C ... +75 °C				

[1] Limit values, operation in short-circuit protected network max. 8 A.
[2] May not exceed or fall short of V_S tolerances.
[3] Without load.
[4] Signal transit time with resistive load.
[5] With light/dark ratio 1:1.
[6] Do not bend below 0 °C.
[7] A = V_S connections reverse-polarity protected.
[8] C = interference suppression.
[9] D = outputs overcurrent and short-circuit protected.
[10] Reference voltage DC 50 V.

Ordering information

Other models available at www.mysick.com/en/W11-2

WTB11-2

- **Switching mode:** light/dark-switching
- **Adjustment:** potentiometer, 5 turns

G

Sensing range max. [1]	Light source	Light spot size (distance)	Output type	Connection	Connection diagram	Model name	Part no.
20 mm ... 350 mm	LED	Ø 6 mm (200 mm)	PNP	Cable, 4-wire, 2 m, PVC	Cd-094	WTB11-2P1131	1041377
				Connector M12, 4-pin	Cd-083	WTB11-2P2431	1041376
			NPN	Cable, 4-wire, 2 m, PVC	Cd-094	WTB11-2N1131	1041379
				Connector M12, 4-pin	Cd-083	WTB11-2N2431	1041378
30 mm ... 1,100 mm	PinPoint-LED	Ø 6 mm (200 mm)	PNP	Connector M12, 4-pin	Cd-083	WTB11-2P2461	1044442
			NPN	Connector M12, 4-pin	Cd-083	WTB11-2N2461	1051818

[1] Object with 90 % reflectance (referred to standard white, DIN 5033)

WTF11-2

- **Switching mode:** light/dark-switching
- **Adjustment:** potentiometer, 5 turns

Sensing range max. [1]	Light source	Light spot size (distance)	Output type	Connection	Connection diagram	Model name	Part no.
35 mm ... 350 mm	LED	Ø 6 mm (200 mm)	PNP	Connector M12, 4-pin	Cd-083	WTF11-2P2431	1041380

[1] Object with 90 % reflectance (referred to standard white, DIN 5033)

WTE11-2

- **Switching mode:** light/dark-switching
- **Adjustment:** single teach-in button

Sensing range max. [1]	Light source	Light spot size (distance)	Output type	Connection	Connection diagram	Model name	Part no.
40 mm ... 1,000 mm	LED	Ø 90 mm (600 mm)	PNP	Cable, 4-wire, 2 m, PVC	Cd-094	WTE11-2P1132	1041382
				Connector M12, 4-pin	Cd-083	WTE11-2P2432	1041381
			NPN	Cable, 4-wire, 2 m, PVC	Cd-094	WTE11-2N1132	1041384
				Connector M12, 4-pin	Cd-083	WTE11-2N2432	1041383

[1] Object with 90 % reflectance (referred to standard white, DIN 5033)

WL11-2

- **Switching mode:** light/dark-switching
- **Polarisation filter:** ✔

Sensing range max. [1]	Light source	Light spot size (distance)	Output type	Adjustment	Connection	Connection diagram	Model name	Part no.
0.15 m ... 10 m	LED	Ø 50 mm (3 m)	PNP	–	Cable, 4-wire, 2 m, PVC	Cd-094	WL11-2P1130	1041386
					Connector M12, 4-pin	Cd-083	WL11-2P2430	1041385
				Single teach-in button	Connector M12, 4-pin	Cd-083	WL11-2P2432	1048542
			NPN	–	Cable, 4-wire, 2 m, PVC	Cd-094	WL11-2N1130	1041388
					Connector M12, 4-pin	Cd-083	WL11-2N2430	1041387

[1] PL80A

G

WL11-2, detecting objects wrapped in film

- **Switching mode:** light/dark-switching
- **Polarisation filter:** ✔

Sensing range max. [1]	Light source	Light spot size (distance)	Output type	Adjustment	Connection	Connection diagram	Model name	Part no.
0.05 m ... 3 m	LED	Ø 50 mm (3 m)	PNP	–	Connector M12	Cd-083	WL11-2P2430S05	1056080

[1] PL80A

WSE11-2

- **Switching mode:** light/dark-switching
- **Adjustment:** –

Sensing range max. [1]	Light source	Light spot size (distance)	Output type	Connection	Connection diagram	Model name	Part no.
0 m ... 20 m	LED	Ø 220 mm (15 m)	PNP	Cable, 4-wire, 2 m, PVC	Cd-088	WSE11-2P1130	1057572
				Connector M12, 4-pin	Cd-084	WSE11-2P2430	1057571
			NPN	Cable, 4-wire, 2 m, PVC	Cd-088	WSE11-2N1130	1057574
				Connector M12, 4-pin	Cd-084	WSE11-2N2430	1057573

[1] Object with 90 % reflectance (referred to standard white, DIN 5033)

Dimensional drawings

Dimensions in mm (inch)

WTB11-2, WTF11-2

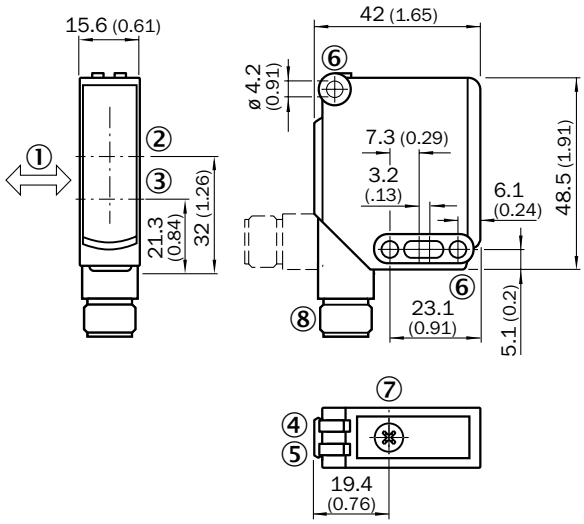

① Standard direction of the material being detected
② Optical axis, receiver
③ Optical axis, sender
④ Status indicator LED green: power on
⑤ Status indicator LED, yellow: Status of received light beam
⑥ Mounting hole ø 4.2 mm
⑦ Sensing range adjustment: potentiometer
⑧ Connection

WTE11-2

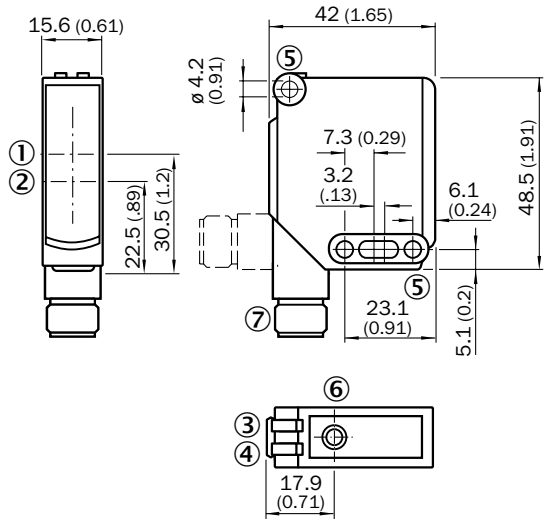

① Optical axis, sender
② Optical axis, receiver
③ Status indicator LED green: power on
④ Status indicator LED, yellow: Status of received light beam
⑤ Mounting hole ø 4.2 mm
⑥ Sensitivity setting; single teach-in button
⑦ Connector M12 or cable

G

WL11-2

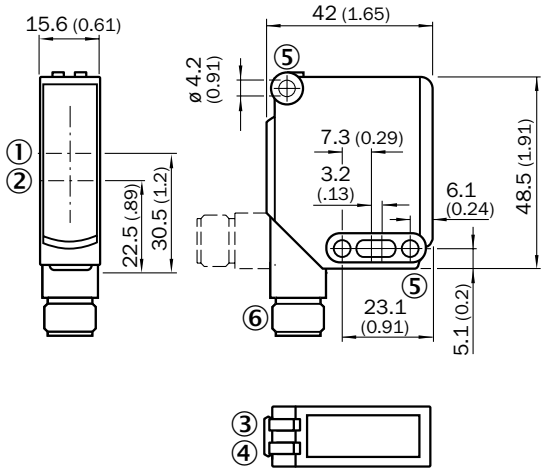

① Optical axis, sender
② Optical axis, receiver
③ Status indicator LED green: power on
④ Status indicator LED, yellow: Status of received light beam
⑤ Mounting hole ø 4.2 mm
⑥ M12 connector, 4-pin or cable

WL11-2, teach-in button

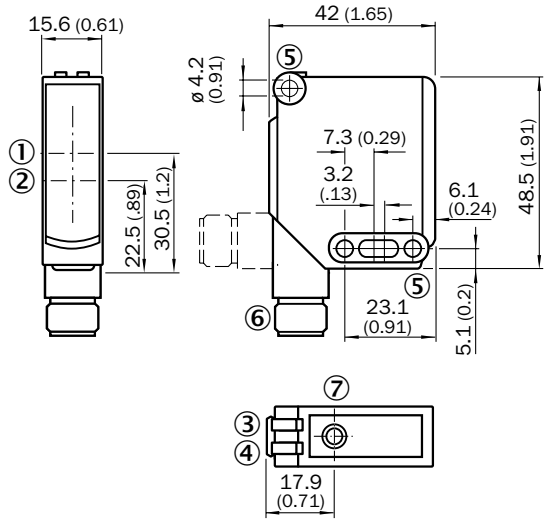

① Optical axis, sender
② Optical axis, receiver
③ Status indicator LED, yellow: Status of received light beam
④ Status indicator LED green: power on
⑤ Mounting hole ø 4.2 mm
⑥ Connector M12, 4-pin

WSE11-2

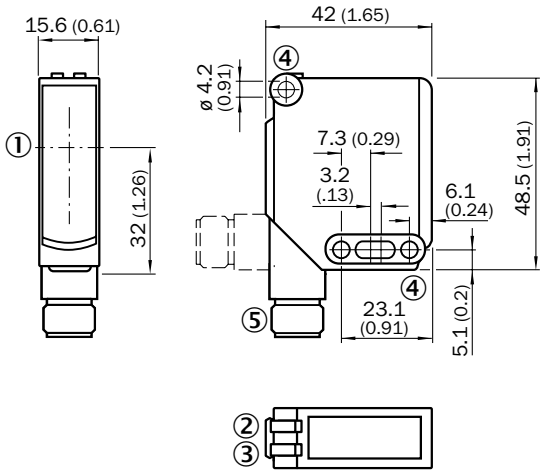

① Center of optical axis
② Status indicator LED green: power on
③ Status indicator LED, yellow: Status of received light beam
④ Mounting hole ø 4.2 mm
⑤ M12 connector, 4-pin or cable

Adjustments

WTB11-2, WTF11-2

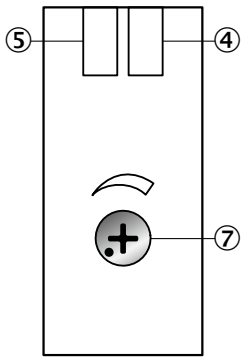

④ Status indicator LED green: power on
⑤ Status indicator LED, yellow: Status of received light beam
⑦ Sensing range adjustment: potentiometer

WTE11-2, WSE11-2

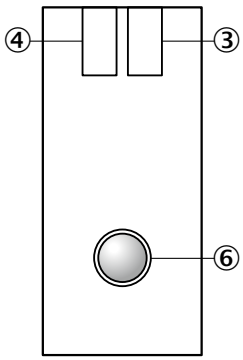

③ Status indicator LED green: power on
④ Status indicator LED, yellow: Status of received light beam
⑥ Adjustment sensing range: single teach-in button

WL11-2

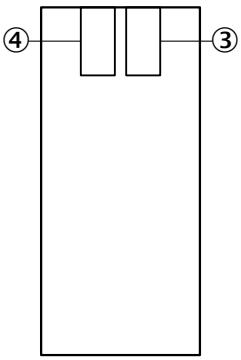

③ Status indicator LED green: power on
④ Status indicator LED, yellow: Status of received light beam

WL11-2, teach-in button

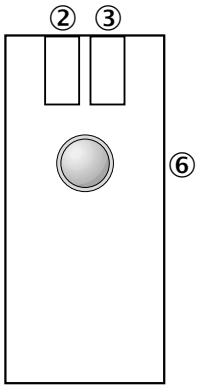

② LED indicator yellow: Light received
③ LED indicator, green: power on, teach-in mode I, LED indicator, blue: teach-in mode II
⑥ Single teach-in button, Function 1: teach-in sensitivity on reflector, Function 2: change operation/teach-in mode

G

Characteristic curves

Black-white shift

WTB11-2, 350 mm

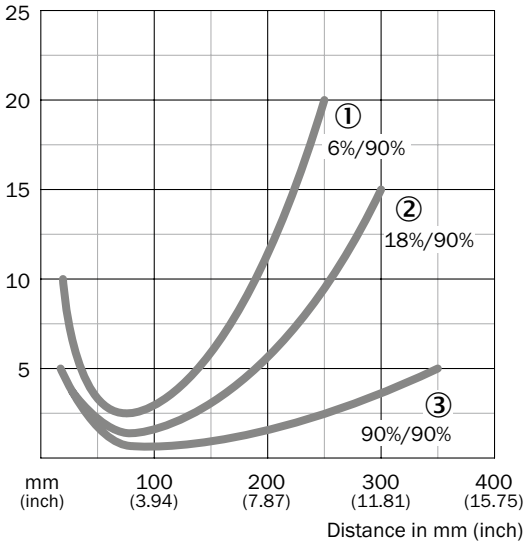

① Sensing range on black, 6 % remission
② Sensing range on gray, 18 % remission
③ Sensing range on white, 90 % remission

WTB11-2, 1,100 mm

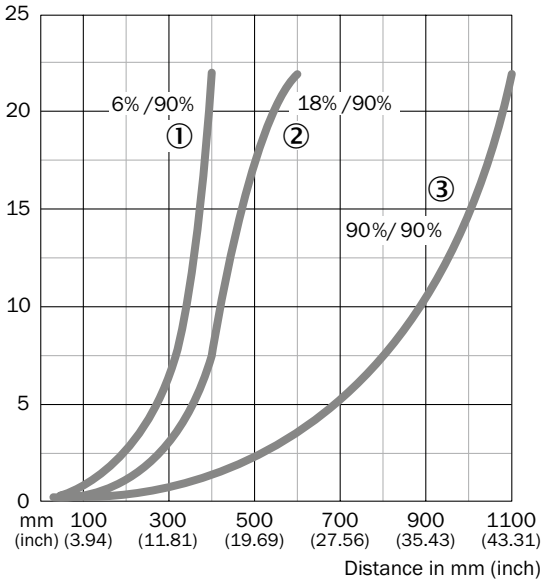

① Sensing range on black, 6 % remission
② Sensing range on gray, 18 % remission
③ Sensing range on white, 90 % remission

WTF11-2

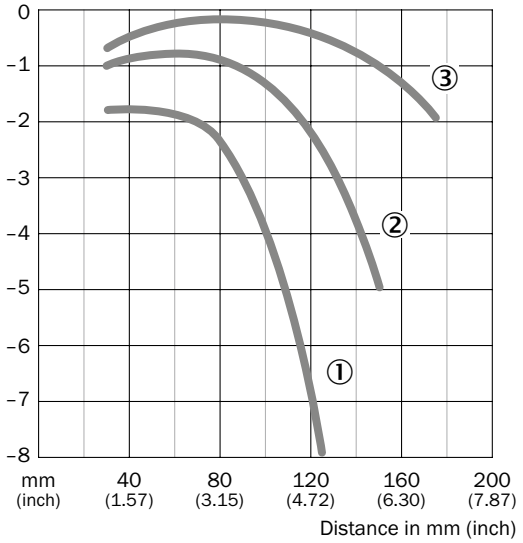

① Sensing range on black, 6 % remission
② Sensing range on gray, 18 % remission
③ Sensing range on white, 90 % remission

WTE11-2

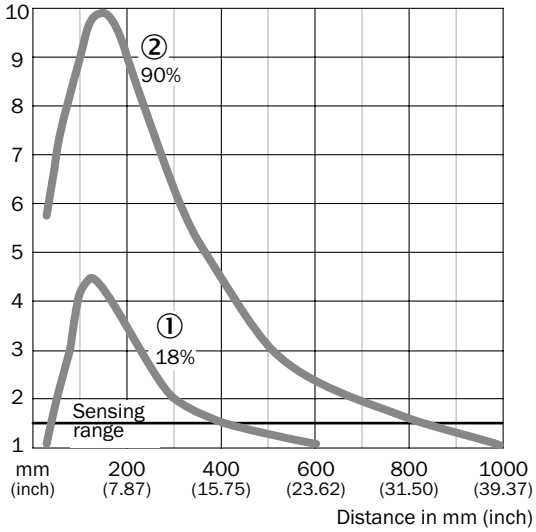

① Sensing range on gray, 18 % remission
② Sensing range on white, 90 % remission

G

Operating reserve

WL11-2

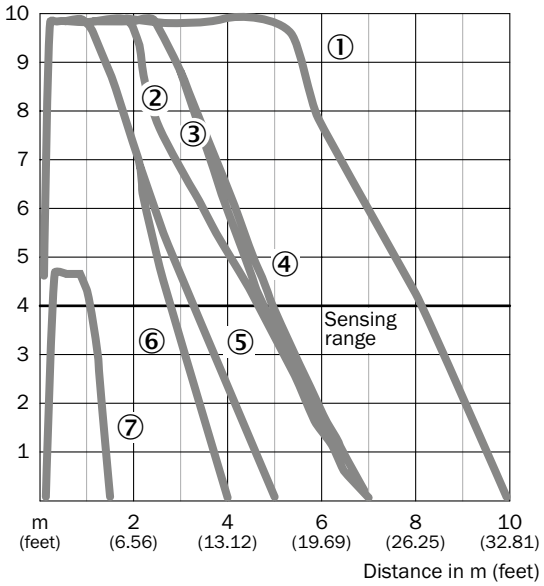

WSE11-2

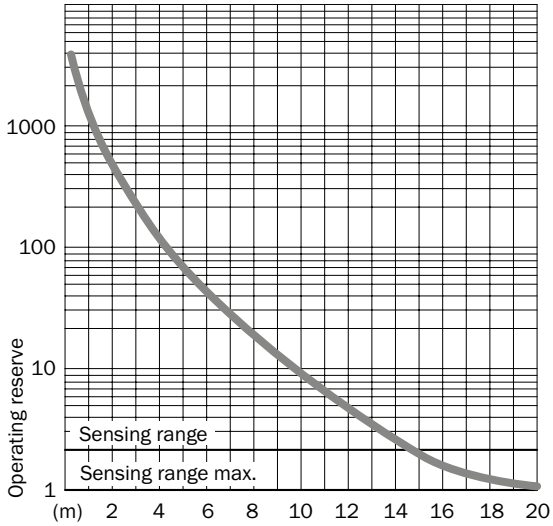

① PL80A
② C110A
③ PL50A
④ PL40A
⑤ PL30A
⑥ PL20A
⑦ Reflective tape Diamond Grade

Bar diagrams

G

WTB11-2, 350 mm

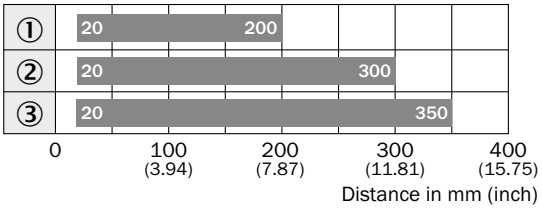

Sensing range

① Sensing range on black, 6 % remission
② Sensing range on gray, 18 % remission
③ Sensing range on white, 90 % remission

WTB11-2, 1,100 mm

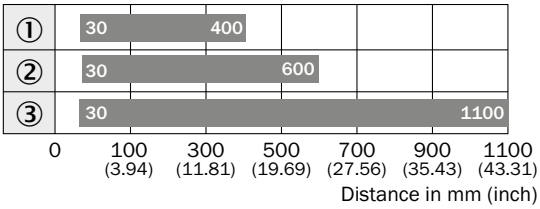

Sensing range

① Sensing range on black, 6 % remission
② Sensing range on gray, 18 % remission
③ Sensing range on white, 90 % remission

WTF11-2

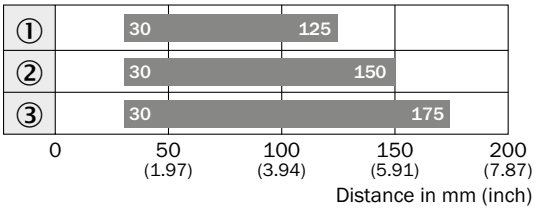

Sensing range

① Sensing range on black, 6 % remission
② Sensing range on gray, 18 % remission
③ Sensing range on white, 90 % remission

WTE11-2

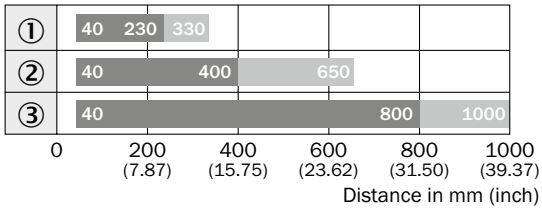

Sensing range Sensing range typ. max.

① Sensing range on black, 6 % remission
② Sensing range on gray, 18 % remission
③ Sensing range on white, 90 % remission

WL11-2

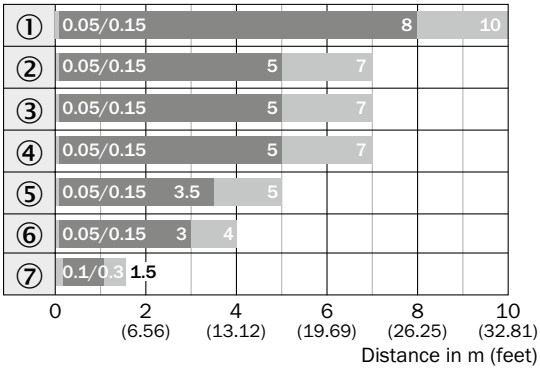

Sensing range Sensing range typ. max.

① PL80A
② C110A
③ PL50A
④ PL40A
⑤ PL30A
⑥ PL20A
⑦ Reflective tape Diamond Grade

G

Connection diagram

Cd-083

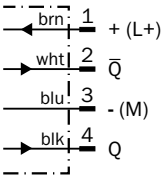

Cd-084

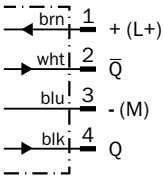

Cd-088

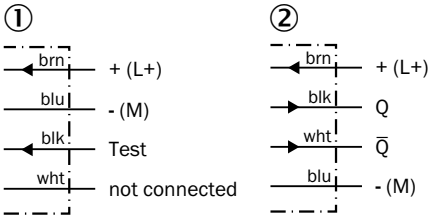

① Sender
② Receiver

Cd-094

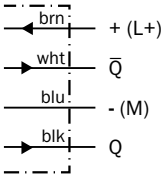

Recommended accessories

Mounting brackets/plates

Mounting brackets

Figure	Material	Description	Model name	Part no.
	Stainless steel	Mounting bracket, large	BEF-WG-W12	2013942
		Mounting bracket, small	BEF-WK-W12	2012938

Plug connectors and cables

Connecting cable (female connector-open)

- **Cable material:** PVC
- **Connector material:** TPU

Figure	Connection type head A	Connection type head B	Connecting cable	Enclosure rating	Model name	Part no.
	Female connector, M12, 4-pin, straight	Cable, open conductor heads	2 m, 4-wire	IP 67	DOL-1204-G02M	6009382
	Female connector, M12, 4-pin, angled	Cable, open conductor heads	2 m, 4-wire	IP 67	DOL-1204-W02M	6009383
	Female connector, M12, 5-pin, straight	Cable, open conductor heads	2 m, 5-wire	IP 67	DOL-1205-G02M	6008899
	Female connector, M12, 5-pin, angled	Cable, open conductor heads	2 m, 5-wire	IP 67	DOL-1205-W02M	6008900

G

Female connector (ready to assemble)

Figure	Connection type head A	Connection type head B	Connector material	Enclosure rating	Model name	Part no.
	Female connector, M12, 4-pin, straight	Screw-type terminals	PBT	IP 67	DOS-1204-G	6007302
	Female connector, M12, 4-pin, angled	Screw-type terminals	PBT	IP 67	DOS-1204-W	6007303

Male connector (ready to assemble)

Figure	Connection type head A	Connection type head B	Connector material	Enclosure rating	Model name	Part no.
	Male connector, M12, 4-pin, straight	Screw-type terminals	PBT	IP 67	STE-1204-G	6009932
	Male connector, M12, 4-pin, angled	Screw-type terminals	PBT	IP 67	STE-1204-W	6022084

Universal bar clamp systems

Figure	Material	Description	Model name	Part no.
	Zinc plated steel (sheet), Diecast zinc (clamp)	Plate N02 for universal clamp bracket	BEF-KHS-N02	2051608
		Plate N03 for universal clamp bracket	BEF-KHS-N03	2051609
		Plate N04 for universal clamp bracket	BEF-KHS-N04	2051610

Device protection (mechanical)

Protective housing/tubes

Figure	Material	Description	Model name	Part no.
	Zinc plated steel (protective housing), Diecast zinc (clamp)	Protective housing for universal clamp	BEF-SG-W12-3	2045175

Reflectors

Angular

Figure	Material	Description	Model name	Part no.
	PMMA/ABS	Rectangular, screw connection, 47 mm x 47 mm	P250	5304812
		Rectangular, screw connection, 38 mm x 15 mm	PL20A	1012719
		Rectangular, screw connection, 56 mm x 28 mm	PL30A	1002314
		Rectangular, screw connection, 37 mm x 56 mm	PL40A	1012720
		Rectangular, screw connection, 80 mm x 80 mm	PL80A	1003865

Reflective tape

Figure	Description	Model name	Part no.
	Self-adhesive, 50 mm x 60 mm	REF-IRF-56	5314244

Round

Figure	Material	Description	Model name	Part no.
	PMMA/ABS	Round, screw connection	C110A	5304549

G

Terminal and alignment brackets

Terminal brackets

Figure	Material	Description	Model name	Part no.
	Steel, zinc coated	Double clamp bracket for dovetail mounting	BEF-DKH-W12	2013947
		Clamping block for dovetail mounting	BEF-KH-W12	2013285

→ **For additional accessories, please see page L-861**

G

Reliable detection of clear material objects – from PET bottles to transparent film

IP 69K

SIRIC®

G

Class 2

LISTED 87LL

SIRIC®
optical ASIC
invented by SICK

ECOLAB

Additional information

Product description

WL11G-2 represents glass photoelectric sensor technology designed optimally for individual applications, thus enabling a wide range of applications in very different areas of automation technology. Whether in filling or packaging technology, WL11G-2 offers optimum performance in a small robust housing, dependable object detection – everything from PET bottles to film – in the range up to 4 m, PinPoint LED, and high reliability in industrial environments.

At a glance

- Retro-reflective for detection of clear material objects
- Rugged housing for industrial use
- PinPoint LED technology with a highly visible light spot
- Space-saving plastic housing in chemically, thermally or mechanically resistant designs
- Dovetail mounting – standard mounting holes and oblong holes
- Highly visible 360° status LEDs
- Simple sensitivity adjustment via potentiometer

Your benefits

- Superior ASIC ensures reliable detection of transparent objects
- PinPoint LED technology provides a bright, small and precise light spot that enables quick and easy sensor alignment
- Precise switching characteristics ensure high performance even in changing application conditions
- Highly visible 360° status LEDs provide fast and easy commissioning
- Rugged housing design withstands harsh environments, reducing downtime and maintenance effort
- Uniform housing, mounting and connection systems reduce mounting and installation time
- High immunity to optical interferences reduces false readings and downtime

→ **www.mysick.com/en/W11G-2**

For more information, just enter the link or scan the QR code and get direct access to technical data, CAD design models, operating instructions, software, application examples and much more.

Detailed technical data

Features

Sensor principle	Photoelectric retro-reflective sensor
Detection principle	Autocollimation
Dimensions (W x H x D)	15.6 mm x 48.5 mm x 42 mm
Housing design (light emission)	Rectangular
Sensing range max. [1]	0 m ... 4 m
Sensing range [1]	0 m ... 4 m
Type of light	Visible red light
Light source [2]	LED
Light spot size (distance)	Ø 25 mm (1.5 m)
Angle of dispersion	Approx. 1.5°
Wave length	640 nm
Adjustment	Potentiometer, 11 turns
Special feature	Detection of transparent objects

[1] PL80A.
[2] Average service life of 100,000 h at T_A = +25 °C.

Mechanics/electronics

Supply voltage [1]	10 V DC ... 30 V DC
Ripple [2]	≤ 5 V_{pp}
Power consumption [3]	≤ 30 mA
Output type	PNP/NPN (depending on type)
Output function	Complementary
Switching mode	Light/dark-switching
Switching mode selector	Selectable via L/D control wire, 0 V or not connected, light-switching, Uv, dark-switching
Signal voltage PNP HIGH/LOW	Uv – 3 V / approx. 0 V
Signal voltage NPN HIGH/LOW	Approx. Uv / < 3 V
Output current $I_{max.}$	100 mA
Response time [4]	≤ 330 µs
Switching frequency [5]	1,500 Hz
Attenuation along light beam	> 8 %
Connection type	Male connector, M12/Cable with connector, M12 (depending on type)
Circuit protection	A [6], C [7], D [8]
Protection class	II
Weight	120 g
Polarisation filter	✔
Housing material	ABS
Optics material	PMMA
Enclosure rating	IP 66/IP 67/IP 69K
Ambient operating temperature	–30 °C ... +60 °C
Ambient storage temperature	–40 °C ... +75 °C

[1] Limit values, operation in short-circuit protected network max. 8 A.
[2] May not exceed or fall short of V_S tolerances.
[3] Without load.
[4] Signal transit time with resistive load.
[5] With light/dark ratio 1:1.
[6] A = V_S connections reverse-polarity protected.
[7] C = interference suppression.
[8] D = outputs overcurrent and short-circuit protected.

G

Ordering information

Other models available at www.mysick.com/en/W11G-2

WL11G-2

- **Adjustment:** potentiometer, 11 turns
- **Polarisation filter:** ✔

Sensing range max. [1]	Output type	Switching mode	Connection	Connection diagram	Model name	Part no.
0 m ... 4 m	PNP, NPN	Light/dark-switching	Connector M12, 5-pin	Cd-144	WL11G-2B2531	1041390
	PNP	Light/dark-switching [2]	Cable with connector M12, 4-pin	Cd-101	WL11G-2K3431	1048313

[1] PL80A.

[2] Pin 2 / Pin 4 swapped over.

Dimensional drawings

Dimensions in mm (inch)

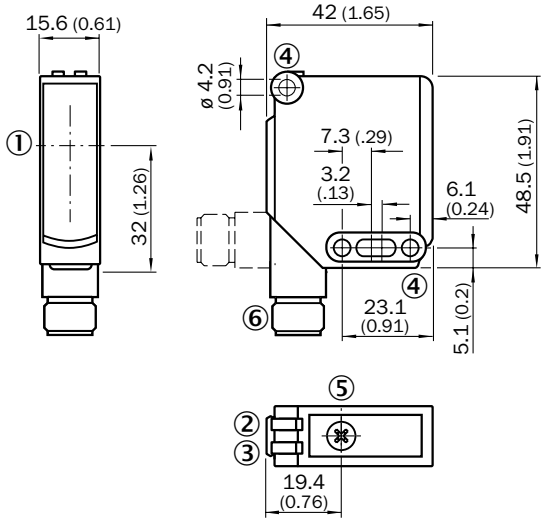

① Center of optical axis
② Status indicator LED green: power on
③ Status indicator LED, yellow: Status of received light beam
④ Mounting hole ø 4.2 mm
⑤ Sensitivity adjustment: poti

Adjustments

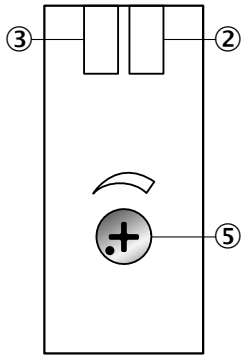

② Status indicator LED green: power on
③ Status indicator LED, yellow: Status of received light beam
⑤ Sensitivity adjustment

Characteristic curves

Operating reserve

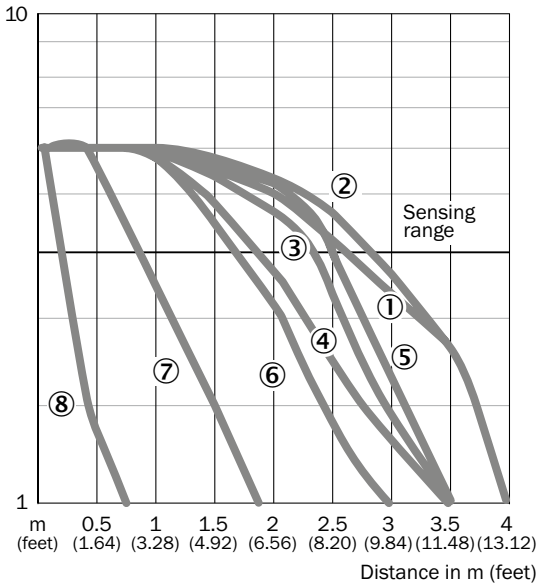

① PL80A
② C110A
③ P250F
④ PL50A
⑤ PL40A
⑥ PL30A
⑦ PL20A
⑧ Reflective tape Diamond Grade

Bar diagrams

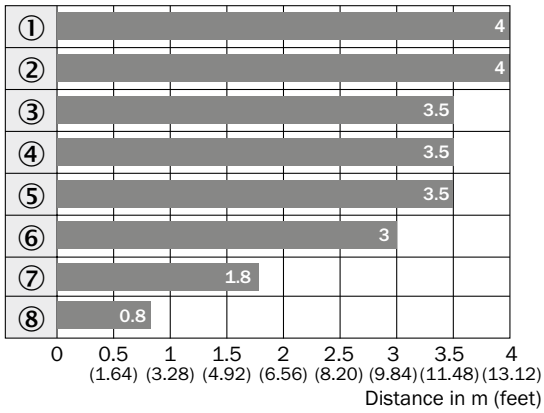

Sensing range

① PL80A
② C110A
③ P250F
④ PL50A
⑤ PL40A
⑥ PL30A
⑦ PL20A
⑧ Reflective tape Diamond Grade

G

Connection diagram

Cd-101

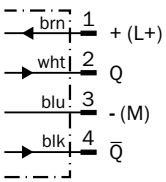

Cd-144

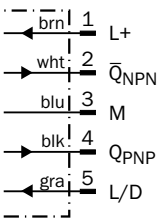

Recommended accessories

Mounting brackets/plates

Mounting brackets

Figure	Material	Description	Model name	Part no.
	Stainless steel	Mounting bracket, large	BEF-WG-W12	2013942
		Mounting bracket, small	BEF-WK-W12	2012938

Plug connectors and cables

Connecting cable (female connector-open)

- **Cable material:** PVC
- **Connector material:** TPU

Figure	Connection type head A	Connection type head B	Connecting cable	Enclosure rating	Model name	Part no.
	Female connector, M12, 4-pin, straight	Cable, open conductor heads	2 m, 4-wire	IP 67	DOL-1204-G02M	6009382
	Female connector, M12, 4-pin, angled	Cable, open conductor heads	2 m, 4-wire	IP 67	DOL-1204-W02M	6009383
	Female connector, M12, 5-pin, straight	Cable, open conductor heads	2 m, 5-wire	IP 67	DOL-1205-G02M	6008899
	Female connector, M12, 5-pin, angled	Cable, open conductor heads	2 m, 5-wire	IP 67	DOL-1205-W02M	6008900

Universal bar clamp systems

Figure	Material	Description	Model name	Part no.
	Zinc plated steel (sheet), Diecast zinc (clamp)	Plate N02 for universal clamp bracket	BEF-KHS-N02	2051608
		Plate N03 for universal clamp bracket	BEF-KHS-N03	2051609
		Plate N04 for universal clamp bracket	BEF-KHS-N04	2051610

G

Device protection (mechanical)

Protective housing/tubes

Figure	Material	Description	Model name	Part no.
	Zinc plated steel (protective housing), Diecast zinc (clamp)	Protective housing for universal clamp	BEF-SG-W12-3	2045175

Terminal and alignment brackets

Terminal brackets

Figure	Material	Description	Model name	Part no.
	Steel, zinc coated	Double clamp bracket for dovetail mounting	BEF-DKH-W12	2013947
		Clamping block for dovetail mounting	BEF-KH-W12	2013285

Reflectors

Angular

Figure	Material	Description	Model name	Part no.
	Plastic	Chemically resistant, screw connection, 47 mm x 47 mm	P250 CHEM	5321097
	PMMA/ABS	Rectangular, screw connection, 80 mm x 80 mm	PL80A	1003865

Fine triple reflectors

Figure	Material	Description	Model name	Part no.
	PMMA/ABS	Fine triple, screw connection, suitable for laser sensors, 47 mm x 47 mm	P250F	5308843
		Fine triple, screw connection, suitable for laser sensors, 18 mm x 18 mm	PL10F	5311210
	Plastic	Fine triple, chemically resistant, screw connection, 18 mm x 18 mm	PL10F CHEM	5321636
	Plastic	Fine triple, chemically resistant, screw connection, suitable for laser sensors, 16 mm x 38 mm	PL20F-CHEM	5326089
	PMMA/ABS	Fine triple, screw connection, suitable for laser sensors, 56 mm x 28 mm	PL30F	5326523
		Fine triple, screw connection, suitable for laser sensors, 76 mm x 45 mm	PL81-1F	5325060

G

Reflective tape

Figure	Description	Model name	Part no.
	Suitable for laser sensors, self-adhesive, cut, see alignment note, 56.3 mm x 56.3 mm	REF-AC1000-56	4063030
	Reflective tape “Diamond Grade”, self-adhesive, customizable size by sheet, width max. 74.9 cm, length max. 91.4 cm	REF-DG-K	4019634

Special reflectors

Figure	Material	Description	Model name	Part no.
	Stainless steel V4A (1.4404, 316L)	Stainless steel reflector, hygienic design, chemically resistant, Enclosure rating IP 69K, D12-adapter shaft, 25 mm x 25 mm	PLH25-D12	2063404
		Stainless steel reflector, hygienic design, chemically resistant, Enclosure rating IP 69K, M12-adapter thread, 25 mm x 25 mm	PLH25-M12	2063403
		Stainless steel reflector, wash-down design, chemically resistant, Enclosure rating IP 69K, screw connection, 14 mm x 14 mm	PLV14-A	2063405

→ **For additional accessories, please see page L-861**

High-performance photoelectric sensor family with laser optics

CDRH
SIRIC® optical ASIC invented by SICK
ECOLAB

Product description

The W12L-2 series of photoelectric sensors features laser technology that is optimally designed for individual applications. These sensors provide reliable object detection, fast response times and are enclosed in a rugged metal housing, which is ideal for use in all types of industrial applications.

At a glance

- Best-in-class retro-reflective laser performance in a metal housing
- Teflon® coating available
- Precise autocollimation optics
- Adjustable focus on retro-reflective sensors
- High switching frequency of 2.5 kHz
- Connection via cable or rotatable connector
- Mounting options with through holes, blind holes, oblong holes and dovetail
- Laser protection class 1 or 2

Your benefits

- Reliable object detection of small objects due to superior ASIC (application-specific integrated circuit) technology combined with innovative laser technology
- Red light laser technology provides quick and easy alignment of sensor
- Rugged metal housing (available with Teflon® coating) withstands harsh environments
- Laser protection class 1 or 2 for eye safety
- Resistance to optical interference reduces false readings and downtime
- Rotatable connector provides easy installation

Additional information

→ **www.mysick.com/en/W12-2_Laser**
For more information, just enter the link or scan the QR code and get direct access to technical data, CAD design models, operating instructions, software, application examples and much more.

Detailed technical data

Features

	WT12L-2	WL12L-2	WS/WE12L-2
Sensor principle	Photoelectric proximity sensor	Photoelectric retro-reflective sensor	Through-beam photoelectric sensor
Detection principle	Background suppression	Autocollimation	–
Dimensions (W x H x D)	15 mm x 49 mm x 41.5 mm		
Housing design (light emission)	Rectangular		
Sensing range max.	20 mm ... 50 mm [1] 30 mm ... 200 mm [2] (depending on type)	0 m ... 18 m [3] (depending on type)	0 m ... 80 m (depending on type)
Focus	45 mm ... 100 mm (depending on type)	–	
Type of light	Visible red light		
Light source	Laser [4]		Laser [4]/Laser [4] [5] (depending on type)
Wave length	650 nm		
Laser class	1/2 (depending on type)		
Adjustment	Potentiometer		

[1] Object with 6 % reflectance (referred to standard white, DIN 5033)
[2] Objects to be sensed with 18 % reflectivity (based on DIN 5033 white standard)
[3] PL80A.
[4] Average service life 50,000 h at T_A = +25 °C.
[5] Parallel light beam.

Mechanics/electronics

	WT12L-2	WL12L-2	WS/WE12L-2
Supply voltage [1]	10 V DC ... 30 V DC		
Ripple [2]	≤ 5 V_{pp}		
Power consumption [3]	≤ 55 mA		–
Power consumption, sender	–		≤ 45 mA [3]
Power consumption, receiver	–		≤ 15 mA [3]
Output type	PNP, NPN		PNP/NPN (depending on type)
Switching mode	Light switching, Dark-switching		–
Switching mode selector	Selectable via L/D control wire, 0 V or not connected, light-switching, Uv, dark-switching		Selectable via L/D control wire
Signal voltage PNP HIGH/LOW	Uv – < 2 V, Uv/0 V, <= 1.5 V	Uv – < 2.9 V, Uv V/0 V <= 1.5 V	
Signal voltage NPN HIGH/LOW	Uv – < 2 V, Uv/0 V, <= 1.5 V	Uv – < 2.9 V, Uv V/0 V <= 1.5 V	
Output current $I_{max.}$	100 mA		
Response time	≤ 200 µs [4]	≤ 500 µs [4]/≤ 200 µs [4] (depending on type)	
1.000 Hz [5]	–	≤ 500 µs	
2.500 Hz [5]	≤ 200 µs		
Connection type	Male connector, M12	Male connector, M12 Cable, 2 m (depending on type)	Male connector, M12
Circuit protection	A [6], C [7], D [8]		
Protection class	II		
Weight	130 g		260 g

G

	WT12L-2	WL12L-2	WS/WE12L-2
Polarisation filter	–	✔	–
Enclosure rating	IP 67/IP 69K		
Ambient operating temperature	–10 °C ... +50 °C		
Ambient storage temperature	–25 °C ... +75 °C		

[1] Limit values, operation in short-circuit protected network max. 8 A.
[2] May not exceed or fall short of V_S tolerances.
[3] Without load.
[4] Signal transit time with resistive load.
[5] With light/dark ratio 1:1.
[6] A = V_S connections reverse-polarity protected.
[7] C = interference suppression.
[8] D = outputs overcurrent and short-circuit protected.

Ordering information

Other models available at www.mysick.com/en/W12-2_Laser

WT12L-2, fixed sensing range, 6% remission

- **Adjustment:** potentiometer
- **Switching mode:** light-switching, dark-switching

Laser class	Sensing range max. [1]	Switching frequency	Focus	Light spot size (distance)	Output type	Connection	Connection diagram	Model name	Part no.
2	20 mm ... 50 mm	2,500 Hz	45 mm	Ø 0.1 mm (45 mm)	PNP, NPN	Connector M12, 5-pin	Cd-145	WT12L-2B510	1017959

[1] Object with 6 % reflectance (referred to standard white, DIN 5033)

WT12L-2

- **Adjustment:** potentiometer
- **Switching mode:** light-switching, dark-switching
- **Connection diagram:** cd-145

G

Laser class	Sensing range max. [1]	Switching frequency	Focus	Light spot size (distance)	Output type	Connection	Housing material	Model name	Part no.
1	30 mm ... 200 mm	2,500 Hz	100 mm	Ø 0.2 mm (100 mm)	PNP, NPN	Connector M12, 5-pin	Metal	WT12L-2B551	1047958
2	30 mm ... 200 mm	2,500 Hz	45 mm	Ø 0.1 mm (45 mm)	PNP, NPN	Connector M12, 5-pin	Metal	WT12L-2B530	1018250
			80 mm	Ø 0.2 mm (80 mm)	PNP, NPN	Connector M12, 5-pin	Metal	WT12L-2B540	1018251
			100 mm	Ø 0.2 mm (100 mm)	PNP, NPN	Connector M12, 5-pin	Metal	WT12L-2B550	1017904
							PTFE	WT12L-2B550T01	1018582

[1] Objects to be sensed with 18 % reflectivity (based on DIN 5033 white standard)

WL12L-2

- **Adjustment:** potentiometer
- **Switching mode:** light-switching, dark-switching

Laser class	Sensing range max. [1]	Switching frequency	Light spot size (distance)	Output type	Connection	Connection diagram	Model name	Part no.
1	0 m ... 18 m	1,500 Hz	Ø 0.8 mm (300 mm)	PNP, NPN	Connector M12, 5-pin	Cd-145	WL12L-2B531	1047959
2	0 m ... 15 m	2,500 Hz	Ø 0.8 mm (300 mm)	PNP, NPN	Connector M12, 5-pin	Cd-145	WL12L-2B520	1018253
	0 m ... 18 m	2,500 Hz	Ø 0.8 mm (300 mm)	PNP, NPN	Cable, 4-wire 2 m	Cd-089	WL12L-2P130	1022041
				PNP, NPN	Connector M12, 5-pin	Cd-145	WL12L-2B530	1018252

[1] PL80A.

WS/WE12L-2

- **Connection:** connector M12, 4-pin

Laser class	Sensing range max.	Switching frequency	Light spot size (distance)	Output type	Adjustment	Connection diagram	Model name	Part no.
1	0 m ... 80 m	1,000 Hz	Ø 150 mm (60 m)	PNP	–	Cd-077	WS/WE12L-2P431	1047960
2	0 m ... 10 m	2,500 Hz	Ø 1 mm (1 m)	PNP	Potentiometer	Cd-077	WS/WE12L-2P410	1018256
				NPN	Potentiometer	Cd-077	WS/WE12L-2N410	1018257
	0 m ... 80 m	2,500 Hz	Ø 150 mm (60 m)	PNP	–	Cd-077	WS/WE12L-2P430	1018254
				NPN	–	Cd-077	WS/WE12L-2N430	1018255

Dimensional drawings

Dimensions in mm (inch)

WT12L-2

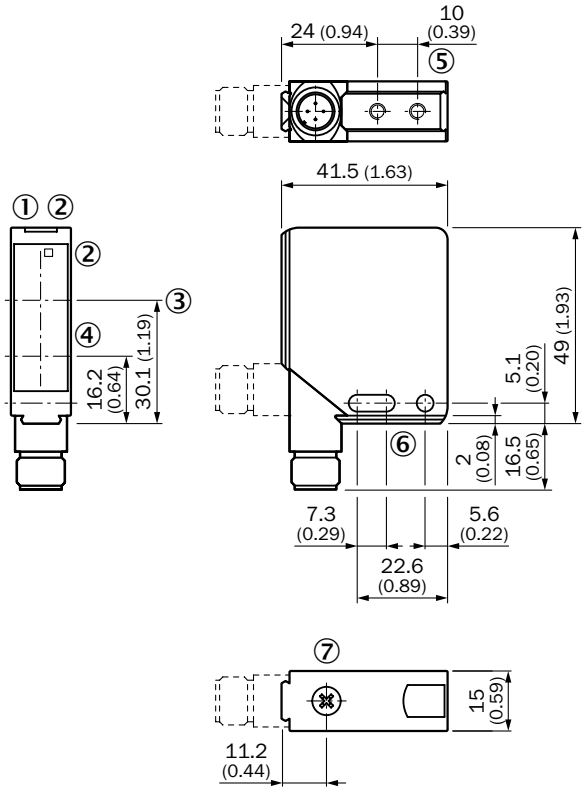

① Operating indicator, green
② LED reception indicator, yellow
③ Optical axis, receiver
④ Optical axis, sender
⑥ Mounting hole, Ø 4.2 mm
⑦ Sensing range adjustment

WL12L-2, WS/WE12L-2

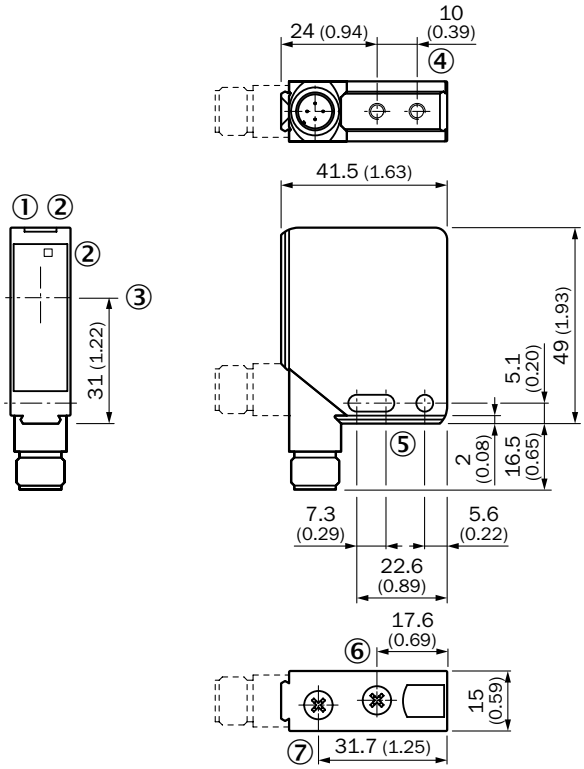

① Operating indicator, green
② LED reception indicator, yellow
③ Center of optical axis
⑤ Mounting hole, Ø 4.2 mm
⑥ Focal adjustment
⑦ Sensitivity adjustment

G

Adjustments

WT12L-2

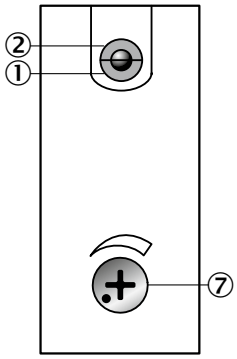

① Operating indicator, green
② LED reception indicator, yellow
⑦ Sensing range adjustment

WL12L-2

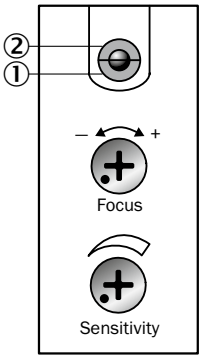

① Operating indicator, green
② LED reception indicator, yellow
⑥ Focal adjustment
⑦ Sensitivity adjustment

WS/WE12L-2

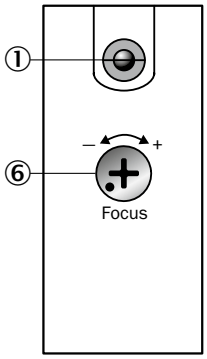

① Operating indicator (WS above only)
⑥ Focal adjustment (WS)

Characteristic curves

Black-white shift

WT12L-2

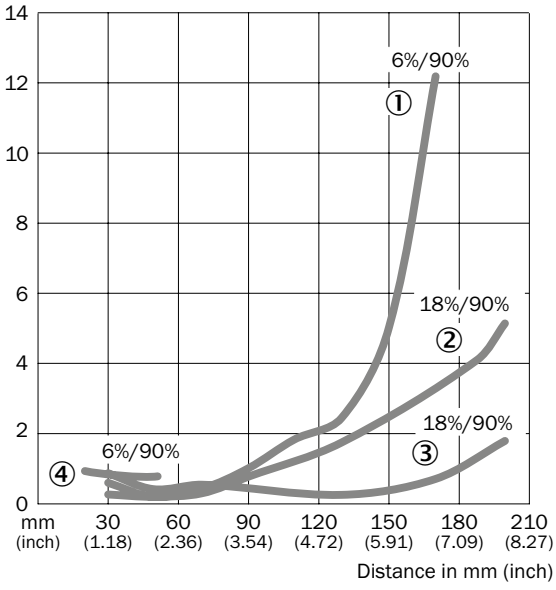

① Sensing range on black, 6 % remission
② Sensing range on gray, 18 % remission
③ Sensing range on white, 90 % remission
④ Sensing range on black, 6 % remission, fix

G

Operating reserve

WL12L-2, 18 m

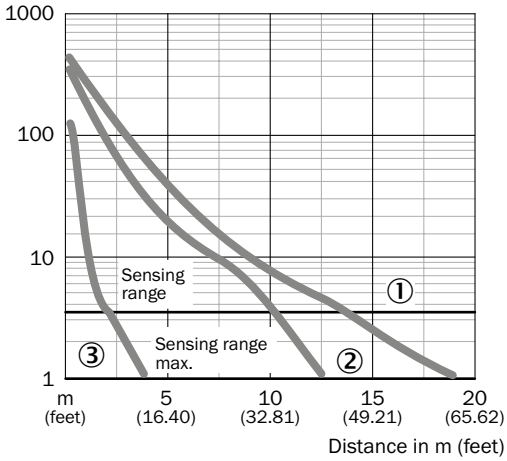

① PL80A
② PL50A
③ Reflective tape Diamond Grade

WL12L-2, 15 m

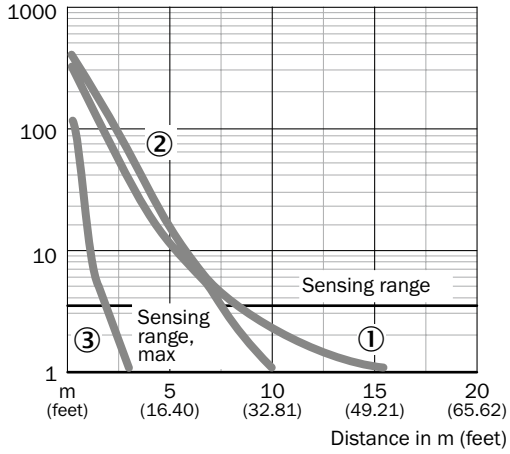

① PL80A
② PL50A
③ Reflective tape Diamond Grade

WS/WE12L-2, 80 m

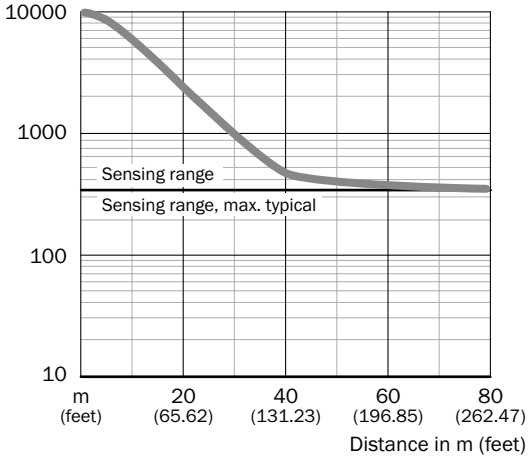

WS/WE12L-2, 10 m

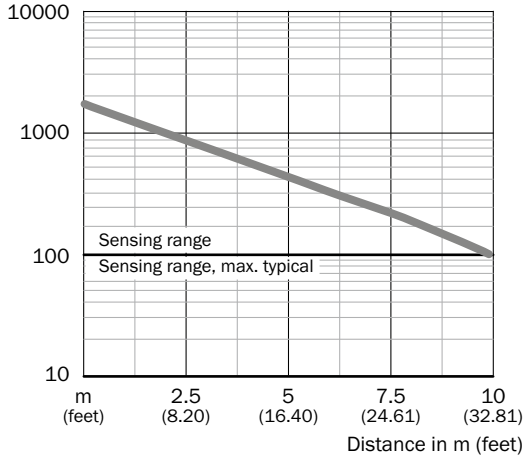

G

Bar diagrams

WT12L-2

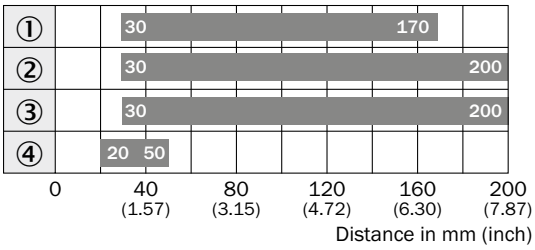

Sensing range

① Sensing range on black, 6 % remission
② Sensing range on gray, 18 % remission
③ Sensing range on white, 90 % remission
④ Sensing range on black, 6 % remission, fix

WL12L-2, 18 m

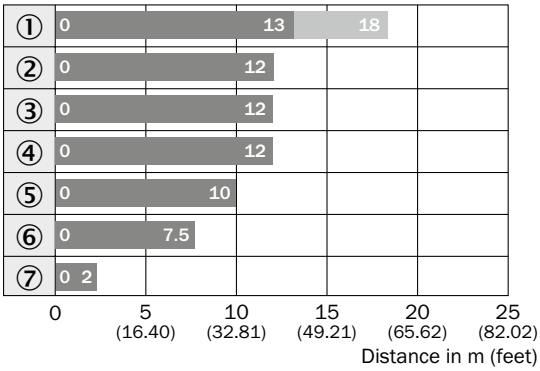

Sensing range Sensing range typ. max.

① PL80A
② PL50A
③ PL40A
④ P250
⑤ PL30A
⑥ PL20A
⑦ Reflective tape Diamond Grade

WL12L-2, 15 m

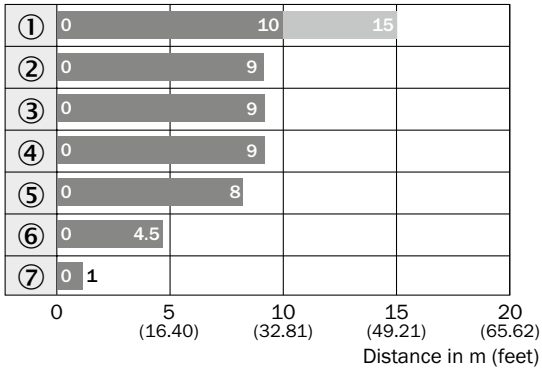

Sensing range Sensing range typ. max.

① PL80A
② PL50A
③ PL40A
④ P250
⑤ PL30A
⑥ PL20A
⑦ Reflective tape Diamond Grade

WS/WE12L-2, 80 m

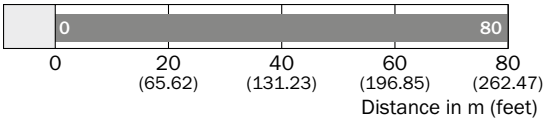

Sensing range/sensing range typ. max.

WS/WE12L-2, 10 m

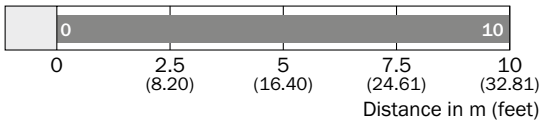

Sensing range/sensing range typ. max.

Light spot diameter

WT12L-2

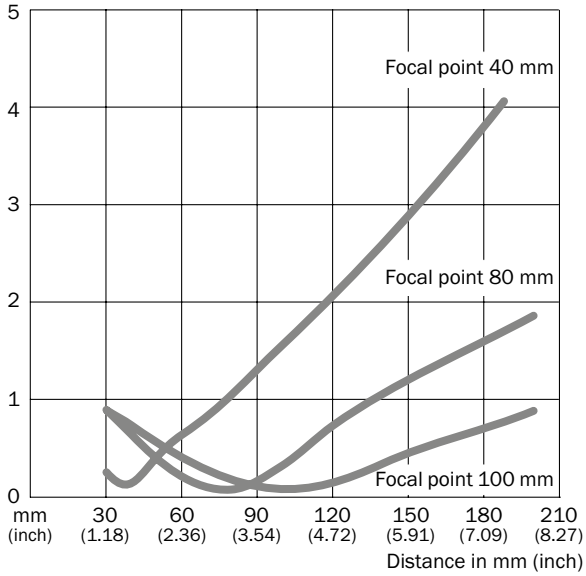

Connection diagram

Cd-077

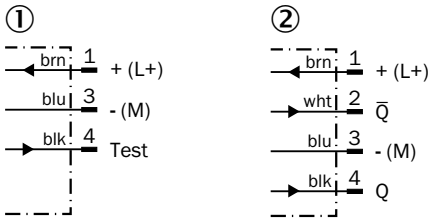

① Sender
② Receiver

Cd-089

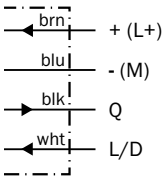

Cd-145

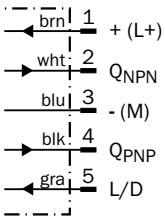

G

Recommended accessories

Mounting brackets/plates

Mounting brackets

Figure	Material	Description	Model name	Part no.
	Stainless steel	Mounting bracket, large	BEF-WG-W12	2013942
		Mounting bracket, small	BEF-WK-W12	2012938

Plug connectors and cables

Connecting cable (female connector-open)

- **Cable material:** PVC
- **Connector material:** TPU

Figure	Connection type head A	Connection type head B	Connecting cable	Enclosure rating	Model name	Part no.
	Female connector, M12, 4-pin, straight	Cable, open conductor heads	2 m, 4-wire	IP 67	DOL-1204-G02M	6009382
			5 m, 4-wire	IP 67	DOL-1204-G05M	6009866
	Female connector, M12, 4-pin, angled	Cable, open conductor heads	2 m, 4-wire	IP 67	DOL-1204-W02M	6009383
			5 m, 4-wire	IP 67	DOL-1204-W05M	6009867
			10 m, 4-wire	IP 67	DOL-1204-W10M	6010541
	Female connector, M12, 5-pin, straight	Cable, open conductor heads	2 m, 5-wire	IP 67	DOL-1205-G02M	6008899
			5 m, 5-wire	IP 67	DOL-1205-G05M	6009868
	Female connector, M12, 5-pin, angled	Cable, open conductor heads	2 m, 5-wire	IP 67	DOL-1205-W02M	6008900
			5 m, 5-wire	IP 67	DOL-1205-W05M	6009869

G

Female connector (ready to assemble)

Figure	Connection type head A	Connection type head B	Connector material	Enclosure rating	Model name	Part no.
	Female connector, M12, 4-pin, straight	Screw-type terminals	PBT	IP 67	DOS-1204-G	6007302
	Female connector, M12, 4-pin, angled	Screw-type terminals	PBT	IP 67	DOS-1204-W	6007303
	Female connector, M12, 5-pin, straight	Screw-type terminals	PBT	IP 67	DOS-1205-G	6009719
	Female connector, M12, 5-pin, angled	Screw-type terminals	PBT	IP 67	DOS-1205-W	6009720

Terminal and alignment brackets

Terminal brackets

Figure	Material	Description	Model name	Part no.
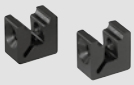	Steel, zinc coated	Clamping block for dovetail mounting	BEF-KH-W12	2013285

Universal bar clamp systems

Figure	Material	Description	Model name	Part no.
	Zinc plated steel (sheet), Diecast zinc (clamp)	Plate N02 for universal clamp bracket	BEF-KHS-N02	2051608
		Plate N03 for universal clamp bracket	BEF-KHS-N03	2051609

Reflectors

Angular

Figure	Material	Description	Model name	Part no.
	PMMA/ABS	Rectangular, screw connection, 80 mm x 80 mm	PL80A	1003865

Fine triple reflectors

Figure	Material	Description	Model name	Part no.
	PMMA/ABS	Fine triple, screw connection, suitable for laser sensors, 47 mm x 47 mm	P250F	5308843
		Fine triple, self-adhesive, suitable for laser sensors, Ø 23 mm	P25F-1	5319385
		Reflector with microprismatic reflex tape REF-AC1000, suitable for laser sensors, see alignment note, 23 mm x 23 mm	P41F	5315128
		Fine triple, screw connection, suitable for laser sensors, 18 mm x 18 mm	PL10F	5311210
		Fine triple, screw connection, suitable for laser sensors, 38 mm x 16 mm	PL20F	5308844
		Fine triple, screw connection, suitable for laser sensors, 56 mm x 28 mm	PL30F	5326523
		Fine triple, screw connection, suitable for laser sensors, 76 mm x 45 mm	PL81-1F	5325060

Reflective tape

Figure	Description	Model name	Part no.
	Suitable for laser sensors, self-adhesive, cut, see alignment note, 56.3 mm x 56.3 mm	REF-AC1000-56	4063030

→ **For additional accessories, please see page L-861**

G

High-performance detection of transparent objects in metal housing

Product description

The W12G photoelectric sensors provide reliable detection of transparent objects. Everything from PET bottles to thin, transparent films is detected. The W12G features a rugged metal housing with high electromagnetic compatibility, high immunity to chemical and thermal conditions, and excellent resistance to high pressure cleaning.

At a glance

- Rugged die-cast zinc housing with optional Teflon® coating
- Reliable detection of transparent objects
- Precise autocollimation optics
- Robust sensors for industrial use
- Precise PinPoint LED
- Dovetail mounting – mounting holes and oblong holes
- Highly visible status LEDs
- Flexible sensor settings, monitoring, advanced diagnostics, and visualization thanks to IO-Link

Your benefits

- Reliable detection of transparent objects – from PET bottles to transparent film – due to superior ASIC (application-specific integrated circuit) technology
- High immunity to ambient conditions reduces false readings
- Red PinPoint LED provides quick and easy alignment of sensor
- Precise switching characteristics, fast response times and high performance ensure superior reliability and productivity in nearly every application type
- Withstands mechanical, thermal, chemical and electromagnetic factors, providing increased industrial reliability
- Flexible mounting and installation due to rotatable connector and versatile mounting options
- IO-Link provides easy data access from the PLC
- Quick and easy configuration

Additional information

→ **www.mysick.com/en/W12G**

For more information, just enter the link or scan the QR code and get direct access to technical data, CAD design models, operating instructions, software, application examples and much more.

G

Detailed technical data

Features

Sensor principle	Photoelectric retro-reflective sensor
Detection principle	Autocollimation
Dimensions (W x H x D)	15.6 mm x 48.5 mm x 42 mm
Housing design (light emission)	Rectangular
Sensing range max. [1]	0 m ... 4 m
Type of light	Visible red light/Infrared light (depending on type)
Light source	LED [2]/PinPoint LED [2] (depending on type)
Angle of dispersion	Approx. 1.5°
Wave length	
Visible red light	640 nm/660 nm (depending on type)
Infrared light	850 nm
Adjustment	Potentiometer, 11 turns/Single teach-in button [3] [4] (depending on type)
Continuous threshold adaption	–/✔ (depending on type)
Special feature	Detection of transparent objects

[1] PL80A.
[2] Average service life of 100,000 h at T_A = +25 °C.
[3] Mode I, 10 % attenuation.
[4] Mode II, 18 % attenuation.

Mechanics/electronics

Supply voltage [1]	10 V DC ... 30 V DC
Ripple [2]	≤ 5 V_{pp}
Power consumption	≤ 40 mA [3]
Output type	PNP/NPN/PNP, NPN (depending on type)
Output function	Complementary
Switching mode	Light switching/Dark-switching/Light/dark-switching (depending on type)
Switching mode selector	Selectable via L/D control wire
Signal voltage PNP HIGH/LOW	> Uv – 3 V/ca. 0 V/approx. V_S – 2.5 V/0 V (depending on type)
Signal voltage NPN HIGH/LOW	Approx. Uv/< 3 V/approx. V_S/< 2.5 V (depending on type)
Output current $I_{max.}$	100 mA
Response time	≤ 330 µs [4]
Switching frequency [5]	1,500 Hz
Connection type	Male connector, M12
Circuit protection	
With automatic threshold adaption (AutoAdapt)	A [6], B [9], C [7], D [8]
Without automatic threshold adaption (AutoAdapt)	A [6], C [7], D [8]
Protection class	II
Weight	120 g
Polarisation filter	✔
IO-Link	✔
Housing material	Zinc diecast
Optics material	PMMA, PMMA, PTFE-coated (depending on type)
Enclosure rating	IP 66, IP 67, IP 69K
Operating mode	Mode I, 10 % attenuation, Mode II, 18 % attenuation
Plausibility output, stable detection	Approx. 0 V/approx. V_S (depending on type)

Plausibility output, unstable detection	V_S – 2.5 V/approx. 1.5 V (depending on type)
Ambient operating temperature	–40 °C ... +60 °C (depending on type)
Ambient storage temperature	–40 °C ... +75 °C

[1] Limit values, operation in short-circuit protected network max. 8 A.
[2] May not exceed or fall short of V_S tolerances.
[3] Without load.
[4] Signal transit time with resistive load.
[5] With light/dark ratio 1:1.
[6] A = V_S connections reverse-polarity protected.
[7] C = interference suppression.
[8] D = outputs overcurrent and short-circuit protected.
[9] B = inputs and output reverse-polarity protected.

Ordering information

Other models available at www.mysick.com/en/W12G

WL12G, metal

- **Housing material:** metal

Type of light	Sensing range max. [1]	Light spot size (distance)	Continuous threshold adaption	Output type	Switching mode	Adjustment	Connection	Connection diagram	Model name	Part no.
Visible red light	0 m ... 4 m	Ø 25 mm (1.5 m)	–	PNP	Light switching Dark-switching	Potentiometer, 11 turns	Connector M12, 4-pin	Cd-087	WL12G-3O2431	1041457
				PNP, NPN	Light switching Dark-switching	Potentiometer, 11 turns	Connector M12, 5-pin	Cd-144	WL12G-3B2531	1041456
			✔	PNP	Light switching Dark-switching	Single teach-in button [2] [3]	Connector M12, 5-pin	Cd-146	WL12G-3P2572	1053535
				NPN	Light switching Dark-switching	Single teach-in button [2] [3]	Connector M12, 5-pin	Cd-146	WL12G-3N2572	1053530
Infrared light	0 m ... 4 m	Ø 100 mm (3 m)	✔	PNP	Light switching Dark-switching	Single teach-in button [2] [3]	Connector M12, 5-pin	Cd-233	WL12G-3P2582	1053536

[1] PL80A.
[2] Mode I, 10 % attenuation.
[3] Mode II, 18 % attenuation.

G

WL12G, PTFE

- **Housing material:** PTFE
- **Type of light:** visible red light

Sensing range max. [1]	Light spot size (distance)	Continuous threshold adaption	Output type	Switching mode	Adjustment [2] [3]	Connection	Connection diagram	Model name	Part no.
0 m ... 4 m	Ø 25 mm (1.5 m)	✔	PNP	Light/dark-switching	Single teach-in button	Connector M12, 5-pin	Cd-146	WL12G-3P2572T01	1053546

[1] PL80A.
[2] Mode I, 10 % attenuation.
[3] Mode II, 18 % attenuation.

WL12G, metal alarm output

- **Housing material:** metal
- **Type of light:** visible red light

Sensing range max. [1]	Light spot size (distance)	Continuous threshold adaption	Output type	Switching mode	Adjustment	Connection	Connection diagram	Model name	Part no.
0 m ... 4 m	Ø 25 mm (1.5 m)	✔	PNP	Light/dark-switching	Single teach-in button [2] [3]	Connector M12, 5-pin	Cd-147	WL12G-3V2572	1053537
			NPN	Light/dark-switching	Single teach-in button [2] [3]	Connector M12, 5-pin	Cd-147	WL12G-3W2572	1053538

[1] PL80A.
[2] Mode I, 10 % attenuation.
[3] Mode II, 18 % attenuation.

G

WL12G, metal IO-Link

- **Housing material:** metal
- **Type of light:** visible red light
- **Output type:** PNP
- **Switching mode:** light/dark-switching
- **Adjustment:** single teach-in button (Mode I, 10 % attenuation.) (Mode II, 18 % attenuation.)
- **Continuous threshold adaption:** ✔

Sensing range max. [1]	Light spot size (distance)	IO-Link	Advanced functions	Connection	Connection diagram	Model name	Part no.
0 m ... 4 m	Ø 25 mm (1.5 m)	Standard functions	–	Connector M12, 4-pin	Cd-098	WL12GC-3P2472	1054087
		Standard functions, advanced functions	Timer, False Tripping Suppression (Debouncing)			WL12GC-3P2472A70	1067778
			High-Speed Counter, False Tripping Suppression (Debouncing)			WL12GC-3P2472A71	1067779
			Time Stamp, False Tripping Suppression (Debouncing)			WL12GC-3P2472A91	1061063

[1] PL80A.
[2] Mode I, 10 % attenuation.
[3] Mode II, 18 % attenuation.

Dimensional drawings

Dimensions in mm (inch)

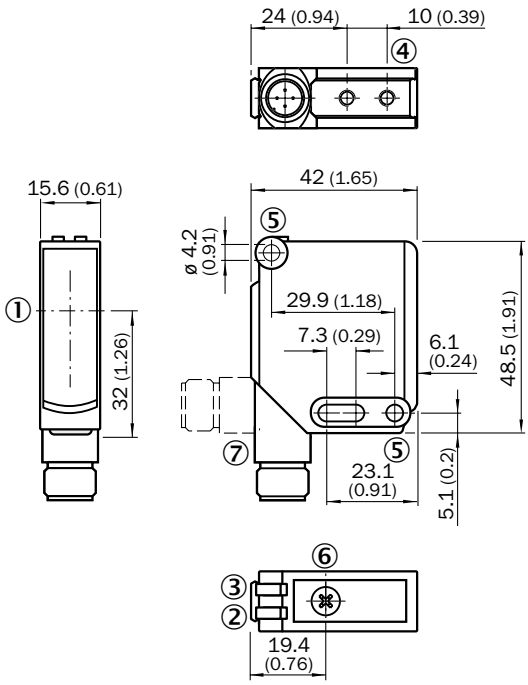

① Optical axis
② LED indicator yellow: Light received
③ Green LED indicator: supply voltage active
④ M4 threaded mounting hole, 4 mm deep
⑤ Mounting hole, Ø 4.2 mm
⑥ Sensitivity adjustment: poti
⑦ Connection

Adjustments

Potentiometer

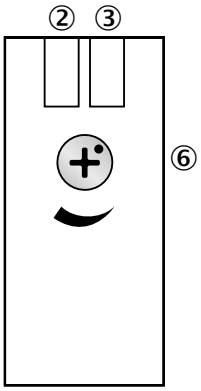

② LED indicator yellow: Light received
③ Green LED indicator: supply voltage active
⑥ Sensitivity adjustment: poti

Singel teach-in button

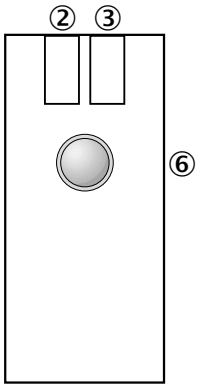

② LED indicator yellow: Light received
③ LED indicator, green: power on, teach-in mode I,LED indicator, blue: teach-in mode II
⑥ Single teach-in button, Function 1: teach-in sensitivity on reflector, Function 2: change operation/ teach-in mode

G

Bar diagrams

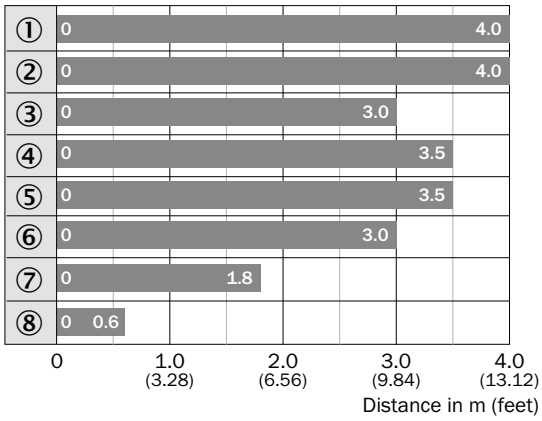

Sensing range max.

① PL80A
② C110A
③ P250F
④ PL50A
⑤ PL40A
⑥ PL30A
⑦ PL20A
⑧ REF-IRF-56

Light spot diameter

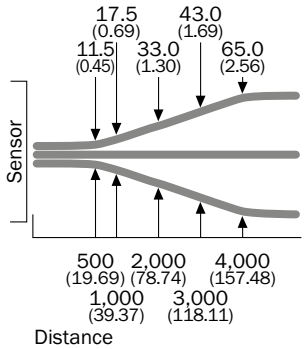

All dimensions in mm (inch)

Connection diagram

Cd-087

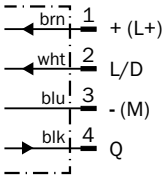

Cd-098

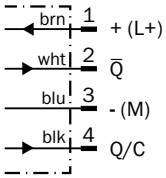

Cd-144

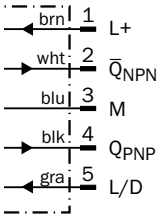

Cd-146

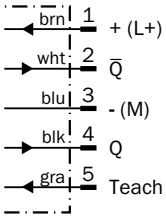

Cd-147

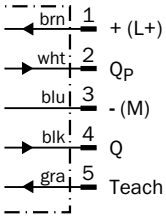

Cd-233

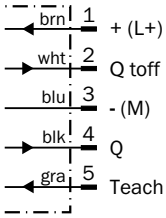

Recommended accessories

Mounting brackets/plates

Mounting brackets

Figure	Material	Description	Model name	Part no.
	Stainless steel	Mounting bracket, large	BEF-WG-W12	2013942
		Mounting bracket, small	BEF-WK-W12	2012938

G

Plug connectors and cables

Connecting cable (female connector-open)

- **Cable material:** PVC
- **Connector material:** TPU

Figure	Connection type head A	Connection type head B	Connecting cable	Enclosure rating	Model name	Part no.
	Female connector, M12, 4-pin, straight	Cable, open conductor heads	2 m, 4-wire	IP 67	DOL-1204-G02M	6009382
			5 m, 4-wire	IP 67	DOL-1204-G05M	6009866
	Female connector, M12, 4-pin, angled	Cable, open conductor heads	2 m, 4-wire	IP 67	DOL-1204-W02M	6009383
			5 m, 4-wire	IP 67	DOL-1204-W05M	6009867
	Female connector, M12, 5-pin, straight	Cable, open conductor heads	5 m, 5-wire	IP 67	DOL-1205-G05M	6009868
	Female connector, M12, 5-pin, angled	Cable, open conductor heads	2 m, 5-wire	IP 67	DOL-1205-W02M	6008900
			5 m, 5-wire	IP 67	DOL-1205-W05M	6009869

Female connector (ready to assemble)

Figure	Connection type head A	Connection type head B	Connector material	Enclosure rating	Model name	Part no.
	Female connector, M12, 4-pin, straight	Screw-type terminals	PBT	IP 67	DOS-1204-G	6007302
	Female connector, M12, 4-pin, angled	Screw-type terminals	PBT	IP 67	DOS-1204-W	6007303
	Female connector, M12, 5-pin, straight	Screw-type terminals	PBT	IP 67	DOS-1205-G	6009719
	Female connector, M12, 5-pin, angled	Screw-type terminals	PBT	IP 67	DOS-1205-W	6009720

Universal bar clamp systems

Figure	Material	Description	Model name	Part no.
	Zinc plated steel (sheet), Diecast zinc (clamp)	Plate N02 for universal clamp bracket	BEF-KHS-N02	2051608
		Plate N03 for universal clamp bracket	BEF-KHS-N03	2051609
		Plate N04 for universal clamp bracket	BEF-KHS-N04	2051610

G

Device protection (mechanical)

Protective housing/tubes

Figure	Material	Description	Model name	Part no.
	Zinc plated steel (protective housing), Diecast zinc (clamp)	Protective housing for universal clamp	BEF-SG-W12-3	2045175

Terminal and alignment brackets

Terminal brackets

Figure	Material	Description	Model name	Part no.
	Steel, zinc coated	Double clamp bracket for dovetail mounting	BEF-DKH-W12	2013947
		Clamping block for dovetail mounting	BEF-KH-W12	2013285

Reflectors

Angular

Figure	Material	Description	Model name	Part no.
	Plastic	Chemically resistant, screw connection, 47 mm x 47 mm	P250 CHEM	5321097
	PMMA/ABS	Rectangular, screw connection, 80 mm x 80 mm	PL80A	1003865

Fine triple reflectors

Figure	Material	Description	Model name	Part no.
	PMMA/ABS	Fine triple, screw connection, suitable for laser sensors, 47 mm x 47 mm	P250F	5308843
		Fine triple, screw connection, suitable for laser sensors, 18 mm x 18 mm	PL10F	5311210
	Plastic	Fine triple, chemically resistant, screw connection, 18 mm x 18 mm	PL10F CHEM	5321636
	PMMA/ABS	Fine triple, screw connection, suitable for laser sensors, 38 mm x 16 mm	PL20F	5308844
	Plastic	Fine triple, chemically resistant, screw connection, suitable for laser sensors, 16 mm x 38 mm	PL20F-CHEM	5326089
	PMMA/ABS	Fine triple, screw connection, suitable for laser sensors, 56 mm x 28 mm	PL30F	5326523
		Fine triple, screw connection, suitable for laser sensors, 76 mm x 45 mm	PL81-1F	5325060

Reflective tape

Figure	Description	Model name	Part no.
	Suitable for laser sensors, self-adhesive, cut, see alignment note, 56.3 mm x 56.3 mm	REF-AC1000-56	4063030

Special reflectors

Figure	Material	Description	Model name	Part no.
	Stainless steel V4A (1.4404, 316L)	Stainless steel reflector, hygienic design, chemically resistant, Enclosure rating IP 69K, D12-adapter shaft, 25 mm x 25 mm	PLH25-D12	2063404
		Stainless steel reflector, hygienic design, chemically resistant, Enclosure rating IP 69K, M12-adapter thread, 25 mm x 25 mm	PLH25-M12	2063403
		Stainless steel reflector, wash-down design, chemically resistant, Enclosure rating IP 69K, screw connection, 14 mm x 14 mm	PLV14-A	2063405

→ **For additional accessories, please see page L-861**

G

Rugged metal housing provides exceptional performance in demanding applications

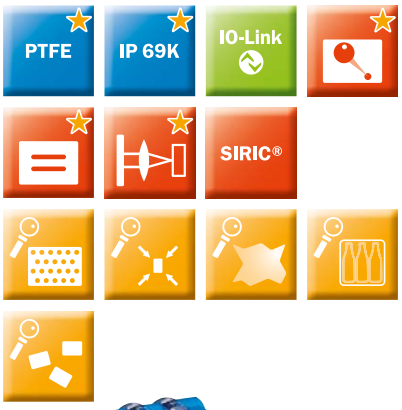

G

Product description

The W12-3 family features a complete range of photoelectric sensors that are enclosed in a metal housing. There are a large number of variations that are available, including proximity, retro-reflective, through-beam, special laser and clear material versions. These sensors offer many advantages over conventional optical sensors due to their reliable object detection and monitoring capabilities. Whether in packaging, pharmaceutical, or the food and beverage industries – the W12 family provides a solution for any application.

At a glance

- Best-in-class optical performance due to superior OES technology
- Autocollimation with retro-reflective sensors
- Background and foreground suppression with second emitter LED on proximity sensors
- Highly visible, precise light spot and high-energy IR transmitters
- Rugged die-cast zinc housing, optional with Teflon® coating
- Mounting options with through holes, base blind holes, oblong through holes and dovetail
- Flexible sensor settings, monitoring, advanced diagnostics, and visualization thanks to IO-Link

Your benefits

- Reliable detection due to superior ASIC (application-specific integrated circuit) technology and immunity to optical interference factors from the industrial environment
- PinPoint LED technology provides a bright, small and precise light spot that enables quick and easy sensor alignment
- Precise switching characteristics ensure reliable object detection, reducing downtime caused by re-adjusting sensors during recipe changes
- Wide range of products enclosed in a rugged metal housing enables application flexibility in a broad range of industrial environments
- Flexible mounting options reduce installation time
- IO-Link provides easy data access from the PLC
- Quick and easy configuration
- Quick and easy integration using function blocks

Additional information

→ **www.mysick.com/en/W12-3**

For more information, just enter the link or scan the QR code and get direct access to technical data, CAD design models, operating instructions, software, application examples and much more.

Detailed technical data

Features

	WTB12-3	WTF12-3	WL12-3	WSE12-3
Sensor principle	Photoelectric proximity sensor		Photoelectric retro-reflective sensor	Through-beam photo-electric sensor
Detection principle	Background suppres-sion	Foreground suppres-sion	Autocollimation	–
Dimensions (W x H x D)	15.6 mm x 48.5 mm x 42 mm			
Housing design (light emission)	Rectangular			
Sensing range max.	20 mm ... 800 mm [1] (depending on type)	30 mm ... 500 mm [1] (depending on type)	0 m ... 7 m [2] (depending on type)	0 m ... 20 m
Sensing range	20 mm ... 800 mm (depending on type)	30 mm ... 500 mm (depending on type)	0 m ... 5 m [2] (depending on type)	0 m ... 15 m
Type of light	Visible red light/Infra-red light (depending on type)	Visible red light		
Light source	LED [3]/PinPoint LED [3] (depending on type)	LED [3]		
Angle of dispersion	–		Approx. 1.5°/5° (depending on type)	Approx. 1.5°
Wave length				
Visible red light	660 nm/640 nm (depending on type)		640 nm	
Infrared light	850 nm/880 nm (depending on type)	–		
Adjustment	Potentiometer, 5 turns/Single teach-in button/Double teach-in button/Cable (depending on type)			
Special feature	Line-shaped light spot (depending on type)	–	Focused optics (depending on type)	–

[1] Object with 90 % reflectance (referred to standard white, DIN 5033)
[2] PL80A.
[3] Average service life of 100,000 h at T_A = +25 °C.

G

Mechanics/electronics

	WTB12-3	WTF12-3	WL12-3	WSE12-3
Supply voltage [1]	10 V DC ... 30 V DC			
Ripple [2]	≤ 5 V_{pp}			
Power consumption [3]	≤ 30 mA ... ≤ 60 mA (depending on type)	≤ 30 mA ... ≤ 45 mA (depending on type)	≤ 30 mA ... ≤ 100 mA (depending on type)	–
Power consumption, sender [3]	–			≤ 30 mA
Power consumption, receiver [3]	–			≤ 15 mA ... ≤ 25 mA (depending on type)
Output type	PNP/NPN (depending on type)			
Output function	Complementary			
Switching mode	Light/dark-switching/Dark-switching (depending on type)			
Signal voltage PNP HIGH/LOW	> Uv – 2,5 V/ca. 0 V			
Signal voltage NPN HIGH/LOW	Approx. VS/< 2.5 V			
Output current $I_{max.}$	100 mA			
Response time				
Switching frequency 750 Hz [5]	≤ 700 µs [4]	–		
Switching frequency 1,500 Hz [5]	≤ 330 µs [4]			
Switching frequency 5,000 Hz [5]	–		≤ 100 µs [4]	–
Connection type	Male connector, M12/Cable/Cable, 3 m [6] (depending on type)			

	WTB12-3	WTF12-3	WL12-3	WSE12-3
Circuit protection	A [7], C [8], D [9]			
Protection class	II			
Weight				
Connector	200 g ... 280 g	200 g	200 g ... 250 g	200 g
Cable	120 g			
Polarisation filter	–		✔ (depending on type)	–
IO-Link	✔ (depending on type)			
Enclosure rating	IP 66, IP 67, IP 69K			
Test input sender off	–			TE to 0 V
Ambient operating temperature	–40 °C ... +60 °C			
Ambient storage temperature	–40 °C ... +75 °C			

[1] Limit values, operation in short-circuit protected network max. 8 A.
[2] May not exceed or fall short of V_S tolerances.
[3] Without load.
[4] Signal transit time with resistive load.
[5] With light/dark ratio 1:1.
[6] Do not bend below 0 °C.
[7] A = V_S connections reverse-polarity protected.
[8] C = interference suppression.
[9] D = outputs overcurrent and short-circuit protected.

Ordering information

Other models available at www.mysick.com/en/W12-3

WTB12-3

- **Sensor principle:** photoelectric proximity sensor
- **Detection principle:** background suppression
- **Switching mode:** light/dark-switching

G

Type of light	Sensing range max. [1]	Light spot size (distance)	Output type	Adjustment	Connection	Connection diagram	Model name	Part no.
Visible red light	35 mm ... 100 mm	Ø 2 mm (60 mm)	PNP	Potentiometer, 5 turns	Connector M12, 4-pin	Cd-083	WTB12-3P2441	1041421
	20 mm ... 350 mm	Ø 6 mm (200 mm)	PNP	Potentiometer, 5 turns	Cable, 4-wire 2 m PVC	Cd-094	WTB12-3P1131	1041413
					Connector M12, 4-pin	Cd-083	WTB12-3P2431	1041411
				Double teach-in button	Connector M12, 4-pin	Cd-083	WTB12-3P2433	1041412
			NPN	Potentiometer, 5 turns	Cable, 4-wire 2 m PVC	Cd-094	WTB12-3N1131	1041418
					Connector M12, 4-pin	Cd-083	WTB12-3N2431	1041416
				Double teach-in button	Connector M12, 4-pin	Cd-083	WTB12-3N2433	1041417
	50 mm ... 800 mm	Ø 9 mm (400 mm)	PNP	Potentiometer, 5 turns	Connector M12, 4-pin	Cd-083	WTB12-3P2461S01	1051967
Infrared light	20 mm ... 600 mm	15 mm x 15 mm (200 mm)	PNP	Potentiometer, 5 turns	Cable, 4-wire 2 m PVC	Cd-094	WTB12-3P1111	1041424
					Cable, 4-wire 3 m PVC	Cd-094	WTB12-3P1711	1041426
					Connector M12, 4-pin	Cd-083	WTB12-3P2411	1041422
				Double teach-in button	Connector M12, 4-pin	Cd-083	WTB12-3P2413	1041423
			NPN	Potentiometer, 5 turns	Cable, 4-wire 2 m PVC	Cd-094	WTB12-3N1111	1041429
					Cable, 4-wire 3 m PVC	Cd-094	WTB12-3N1711	1041430
					Connector M12, 4-pin	Cd-083	WTB12-3N2411	1041427
				Double teach-in button	Connector M12, 4-pin	Cd-083	WTB12-3N2413	1041428

[1] Object with 90 % reflectance (referred to standard white, DIN 5033)

WTB12-3, line-shaped light spot

- **Sensor principle:** photoelectric proximity sensor
- **Detection principle:** background suppression
- **Type of light:** visible red light
- **Switching mode:** light/dark-switching

Sensing range max. [1]	Light spot size (distance)	Output type	Adjustment	Connection	Connection diagram	Model name	Part no.
30 mm ... 500 mm	50 mm x 5 mm (200 mm)	PNP	Potentiometer, 5 turns	Connector M12, 4-pin	Cd-083	WTB12-3P2461S58	1047850

[1] Object with 90 % reflectance (referred to standard white, DIN 5033)

WTB12-3, IO-Link

- **Sensor principle:** photoelectric proximity sensor
- **Detection principle:** background suppression
- **Type of light:** visible red light
- **Switching mode:** light/dark-switching
- **Output type:** PNP
- **Adjustment:** cable, single teach-in button

Sensing range max. [1]	Light spot size (distance)	IO-Link	Advanced functions	Connection	Connection diagram	Model name	Part no.
20 mm ... 350 mm	15 mm x 15 mm (200 mm)	Standard functions	–	Connector M12, 4-pin	Cd-098	WTB12C-3P2432	1067771
		Standard functions, advanced functions	Timer, False Tripping Suppression (Debouncing)			WTB12C-3P2432A70	1067772
			High-Speed Counter, False Tripping Suppression (Debouncing)			WTB12C-3P2432A71	1067773
			Time Stamp, False Tripping Suppression (Debouncing)			WTB12C-3P2432A91	1060222

[1] Object with 90 % reflectance (referred to standard white, DIN 5033)

WTF12-3

- **Sensor principle:** photoelectric proximity sensor
- **Detection principle:** foreground suppression
- **Type of light:** visible red light
- **Switching mode:** light/dark-switching

Sensing range max. [1]	Light spot size (distance)	Output type	Adjustment	Connection	Connection diagram	Model name	Part no.
30 mm ... 175 mm	Ø 2 mm (60 mm)	PNP	Potentiometer, 5 turns	Cable, 4-wire 2 m PVC	Cd-094	WTF12-3P1131	1041406
				Connector M12, 4-pin	Cd-083	WTF12-3P2431	1041404
			Double teach-in button	Connector M12, 4-pin	Cd-083	WTF12-3P2433	1041405
		NPN	Potentiometer, 5 turns	Cable, 4-wire 2 m PVC	Cd-094	WTF12-3N1131	1041410
				Connector M12, 4-pin	Cd-083	WTF12-3N2431	1041408
			Double teach-in button	Connector M12, 4-pin	Cd-083	WTF12-3N2433	1041409

[1] Object with 90 % reflectance (referred to standard white, DIN 5033)

Sensing range max. [1]	Light spot size (distance)	Output type	Adjustment	Connection	Connection diagram	Model name	Part no.
30 mm ... 500 mm	Ø 7 mm (300 mm)	PNP	Potentiometer, 5 turns	Cable, 4-wire 2 m PVC	Cd-094	WTF12-3P1141	1041402
				Connector M12, 4-pin	Cd-083	WTF12-3P2441	1041400
			Single teach-in button	Connector M12, 4-pin	Cd-083	WTF12-3P2443	1041401
		NPN	Potentiometer, 5 turns	Connector M12, 4-pin	Cd-083	WTF12-3N2441	1041403

[1] Object with 90 % reflectance (referred to standard white, DIN 5033)

WL12-3

- **Sensor principle:** photoelectric retro-reflective sensor
- **Detection principle:** autocollimation
- **Switching mode:** light/dark-switching
- **Type of light:** visible red light
- **Light spot size (distance):** Ø 100 mm (3 m)

Sensing range max. [1]	Polarisation filter	Output type	Adjustment	Connection	Connection diagram	Model name	Part no.
0 m ... 7 m	✔	PNP	Potentiometer, 5 turns	Cable, 4-wire 2 m PVC	Cd-094	WL12-3P1131	1041437
				Cable, 4-wire 3 m PVC	Cd-094	WL12-3P1731	1041438
				Connector M12, 4-pin	Cd-083	WL12-3P2431	1041436
		NPN	Potentiometer, 5 turns	Cable, 4-wire 2 m PVC	Cd-094	WL12-3N1131	1041441
				Cable, 4-wire 3 m PVC	Cd-094	WL12-3N1731	1041442
				Connector M12, 4-pin	Cd-083	WL12-3N2431	1041440
	–	PNP	Potentiometer, 5 turns	Cable, 4-wire 2 m PVC	Cd-094	WL12-3P1141	1041445
				Connector M12, 4-pin	Cd-083	WL12-3P2441	1041444
		NPN	Potentiometer, 5 turns	Cable, 4-wire 2 m PVC	Cd-094	WL12-3N1141	1041447
				Connector M12, 4-pin	Cd-083	WL12-3N2441	1041446

[1] PL80A.

G

WL12-3, alarm output

- **Sensor principle:** photoelectric retro-reflective sensor
- **Detection principle:** autocollimation
- **Switching mode:** dark-switching
- **Type of light:** visible red light
- **Light spot size (distance):** Ø 100 mm (3 m)

Sensing range max. [1]	Polarisation filter	Output type	Adjustment	Connection	Connection diagram	Model name	Part no.
0 m ... 7 m	✔	PNP	Potentiometer, 5 turns	Connector M12, 4-pin	Cd-110	WL12-3V2431	1041537

[1] PL80A.

WL12-3, focused optics

- **Sensor principle:** photoelectric retro-reflective sensor
- **Detection principle:** autocollimation
- **Switching mode:** light/dark-switching
- **Type of light:** visible red light
- **Light spot size (distance):** Ø 2 mm (90 mm)

Sensing range max. [1]	Polarisation filter	Output type	Adjustment	Connection	Connection diagram	Model name	Part no.
0 m ... 2 m	✔	PNP	Potentiometer, 5 turns	Cable, 4-wire 2 m PVC	Cd-094	WL12-3P1151	1041449
				Connector M12, 4-pin	Cd-083	WL12-3P2451	1041448
		NPN	Potentiometer, 5 turns	Cable, 4-wire 2 m PVC	Cd-094	WL12-3N1151	1041451
				Connector M12, 4-pin	Cd-083	WL12-3N2451	1041450
	–	PNP	Potentiometer, 5 turns	Cable, 4-wire 2 m PVC	Cd-094	WL12-3P1161	1041453
				Connector M12, 4-pin	Cd-083	WL12-3P2461	1041452
		NPN	Potentiometer, 5 turns	Cable, 4-wire 2 m PVC	Cd-094	WL12-3N1161	1041455
				Connector M12, 4-pin	Cd-083	WL12-3N2461	1041454

[1] PL80A.

WL12-3, IO-Link

- **Sensor principle:** photoelectric retro-reflective sensor
- **Detection principle:** autocollimation
- **Type of light:** visible red light
- **Output type:** PNP
- **Switching mode:** light/dark-switching
- **Adjustment:** cable, single teach-in button

Sensing range max. [1]	Polarisation filter	IO-Link	Advanced functions	Connection	Connection diagram	Model name	Part no.
0 m ... 7 m	✔	Standard functions	–	Connector M12, 4-pin	Cd-098	WL12C-3P2432	1067774
		Standard functions, advanced functions	Timer, False Tripping Suppression (Debouncing)			WL12C-3P2432A70	1067775
			High-Speed Counter, False Tripping Suppression (Debouncing)			WL12C-3P2432A71	1067776
			Time Stamp, False Tripping Suppression (Debouncing)			WL12C-3P2432A91	1067777

[1] PL80A.

WSE12-3

- **Sensor principle:** through-beam photoelectric sensor
- **Switching mode:** light/dark-switching
- **Type of light:** visible red light

Sensing range max.	Light spot size (distance)	Output type	Adjustment	Connection	Connection diagram	Model name	Part no.
0 m ... 20 m	Ø 220 mm (15 mm)	PNP	Potentiometer, 5 turns	Cable, 4-wire 2 m PVC	Cd-088	WSE12-3P1131	1041460
				Connector M12, 4-pin	Cd-072	WSE12-3P2431	1041459
		NPN	Potentiometer, 5 turns	Cable, 4-wire 2 m PVC	Cd-088	WSE12-3N1131	1041463
				Connector M12, 4-pin	Cd-072	WSE12-3N2431	1041462

WSE12-3

- **Sensor principle:** through-beam photoelectric sensor
- **Type of light:** visible red light
- **Light spot size:** Ø 220 mm (15 mm)
- **Switching mode:** light/dark-switching
- **Output type:** PNP

Sensing range max.	IO-Link	Advanced functions	Connection	Connection diagram	Model name	Part no.
0 m ... 20 m	Standard functions	–	Connector M12, 4-pin	Cd-268	WSE12C-3P2430	1067780
	Standard functions, advanced functions	Timer, False Tripping Suppression (Debouncing)			WSE12C-3P2430A70	1067781
		High-Speed Counter, False Tripping Suppression (Debouncing)			WSE12C-3P2430A71	1067782
		Time Stamp, False Tripping Suppression (Debouncing)			WSE12C-3P2430A91	1067783

Dimensional drawings

Dimensions in mm (inch)

WTB12-3, potentiometer

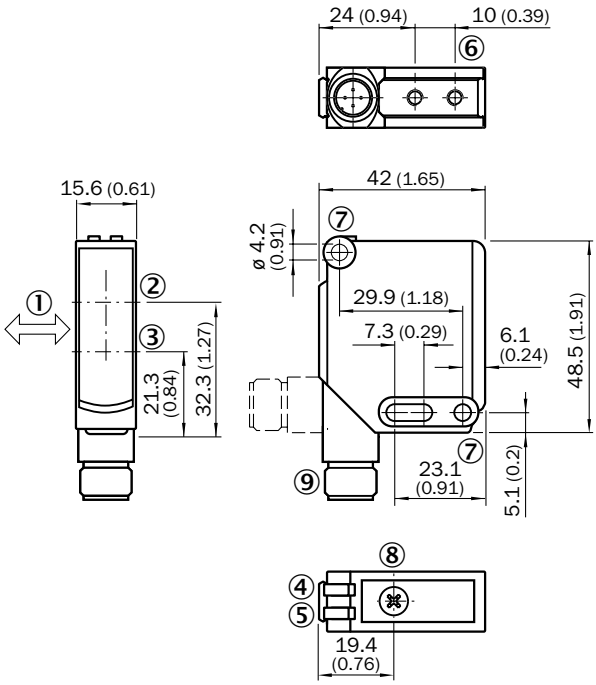

① Standard direction of the material being detected
② Optical axis, receiver
③ Optical axis, sender
④ Status indicator LED green: power on
⑤ Status indicator LED, yellow: Status of received light beam
⑥ M4 threaded mounting hole, 4 mm deep
⑦ Mounting hole, Ø 4.2 mm
⑧ Sensing range adjustment: potentiometer
⑨ Connection

G

WTB12-3, double teach-in button

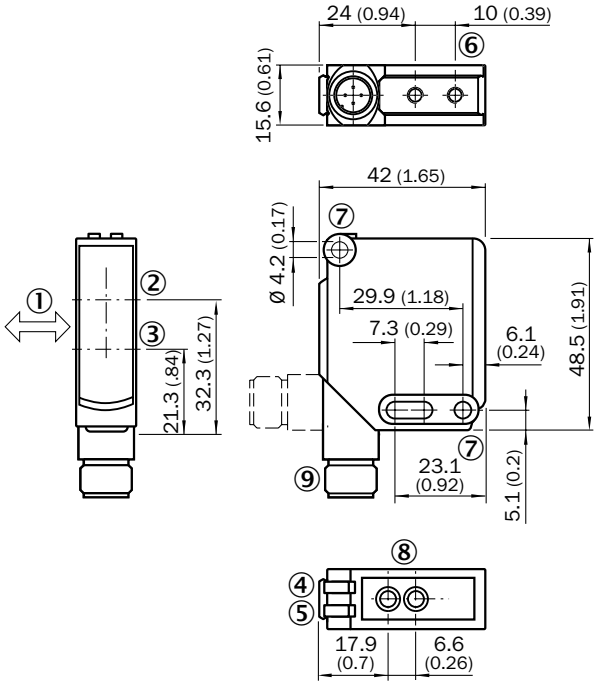

① Standard direction of the material being detected
② Optical axis, receiver
③ Optical axis, sender
④ Status indicator LED green: power on
⑤ Status indicator LED, yellow: Status of received light beam
⑥ M4 threaded mounting hole, 4 mm deep
⑦ Mounting hole, Ø 4.2 mm
⑧ Sensing range adjustment: double teach-in button
⑨ Connection

WTB12-3, IO-Link

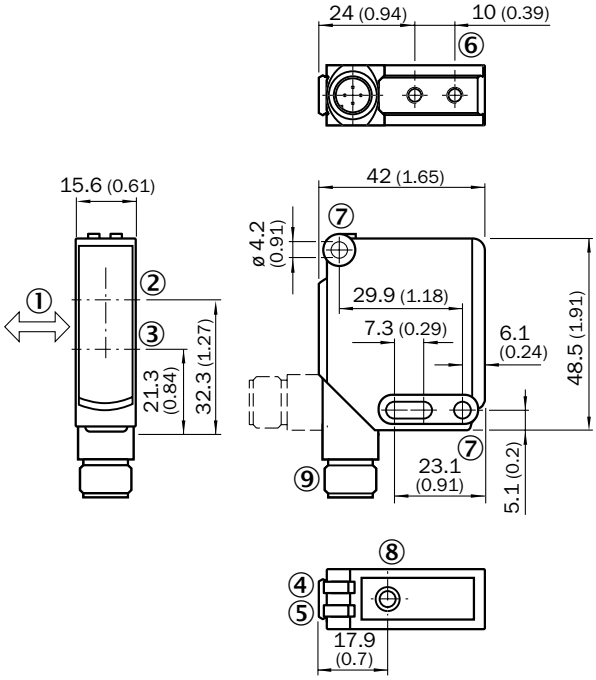

① Standard direction of the material being detected
② Optical axis, receiver
③ Optical axis, sender
④ Green LED indicator: supply voltage active
⑤ LED indicator yellow: Light received
⑥ M4 threaded mounting hole, 4 mm deep
⑦ Mounting hole, Ø 4.2 mm
⑧ Adjustment sensing range: single teach-in button
⑨ Connection

G

WTF12-3, potentiometer

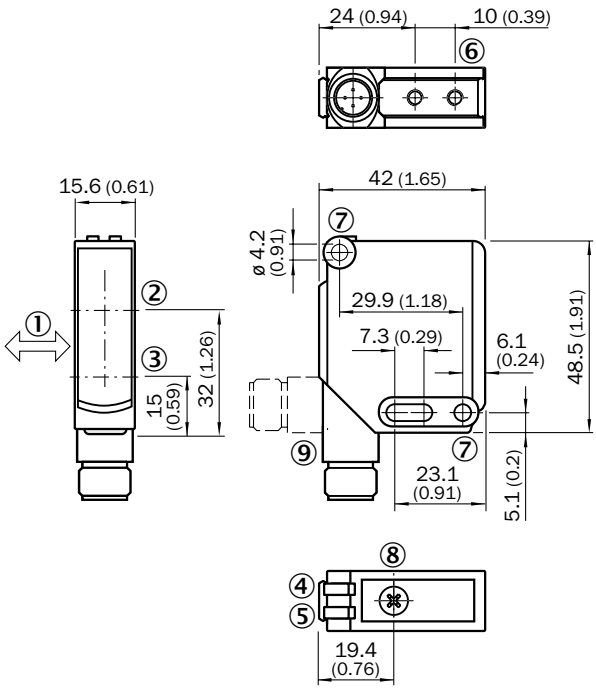

① Standard direction of the material being detected
② Optical axis, receiver
③ Optical axis, sender
④ Status indicator LED green: power on
⑤ Status indicator LED, yellow: Status of received light beam
⑥ M4 threaded mounting hole, 4 mm deep
⑦ Mounting hole, Ø 4.2 mm
⑧ Sensing range adjustment: potentiometer
⑨ Connection

WTF12-3, single teach-in button

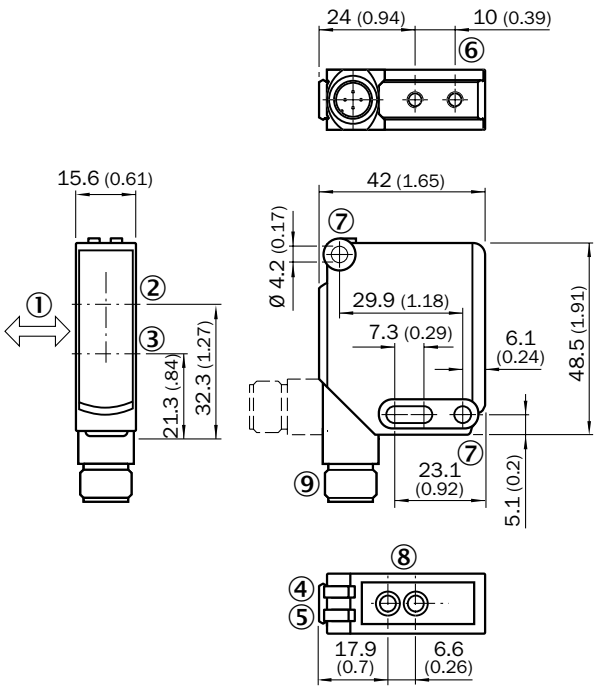

① Standard direction of the material being detected
② Optical axis, receiver
③ Optical axis, sender
④ Status indicator LED green: power on
⑤ Status indicator LED, yellow: Status of received light beam
⑥ M4 threaded mounting hole, 4 mm deep
⑦ Mounting hole, Ø 4.2 mm
⑧ Sensing range adjustment: potentiometer
⑨ Connection

WTF12-3, IO-Link

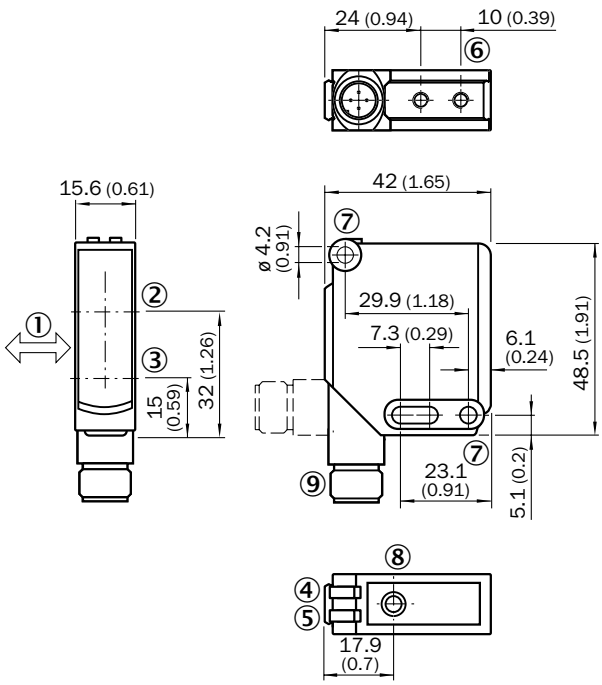

① Standard direction of the material being detected
② Optical axis, receiver
③ Optical axis, sender
④ Green LED indicator: supply voltage active
⑤ LED indicator yellow: Light received
⑥ M4 threaded mounting hole, 4 mm deep
⑦ Mounting hole, Ø 4.2 mm
⑧ Adjustment sensing range: single teach-in button
⑨ Connection

G

WL12-3, WSE12-3

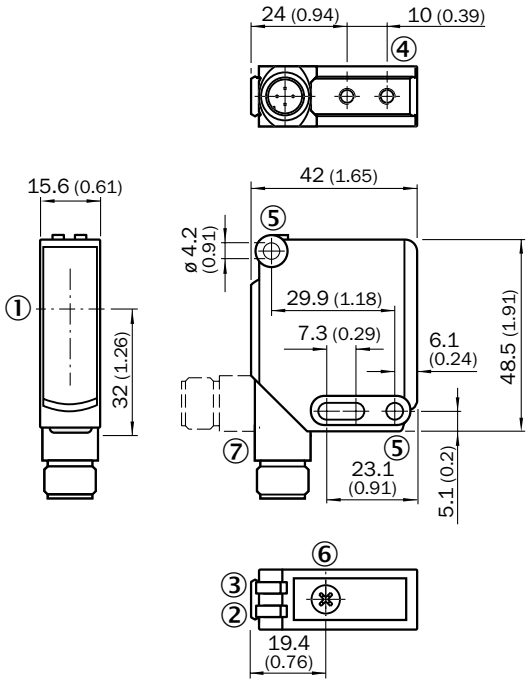

① Optical axis
② LED indicator yellow: Light received
③ Green LED indicator: supply voltage active
④ M4 threaded mounting hole, 4 mm deep
⑤ Mounting hole, Ø 4.2 mm
⑥ Sensitivity adjustment: poti
⑦ Connection

Adjustments

WTB12-3, WTF12-3, potentiometer

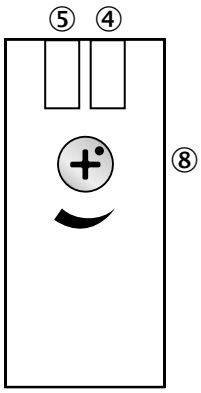

④ Green LED indicator: supply voltage active
⑤ LED indicator yellow: Light received
⑧ Sensing range adjustment: potentiometer

WTB12-3, WTF12-3, double teach-in button

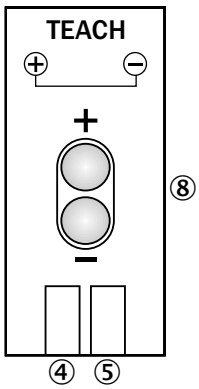

④ Green LED indicator: supply voltage active
⑤ LED indicator yellow: Light received
⑧ Sensing range adjustment: double teach-in button

WTB12-3, WTF12-3, IO-Link

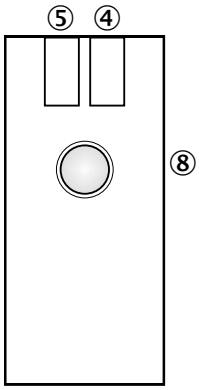

④ Status indicator LED green: power on
⑤ Status indicator LED, yellow: Status of received light beam
⑧ Adjustment sensing range: single teach-in button

WL12-3, WSE12-3

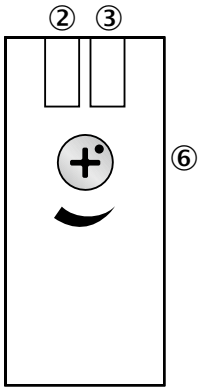

② LED indicator yellow: Light received
③ Green LED indicator: supply voltage active
⑥ Sensitivity adjustment: poti

Characteristic curves

Black-white shift

WTB12-3, red light, 350 mm

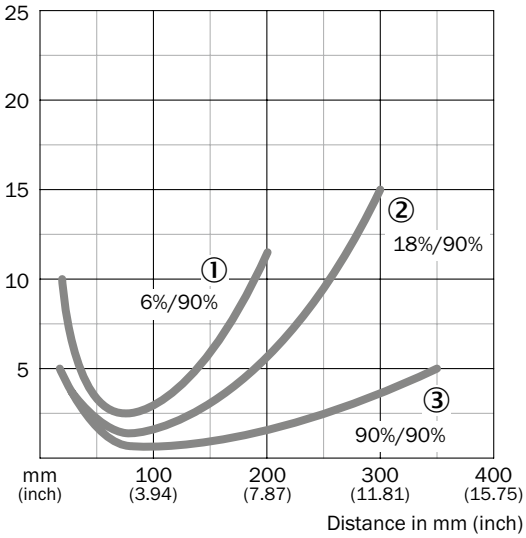

① Sensing range on black, 6 % remission
② Sensing range on gray, 18 % remission
③ Sensing range on white, 90 % remission

WTB12-3, red light, 800 mm

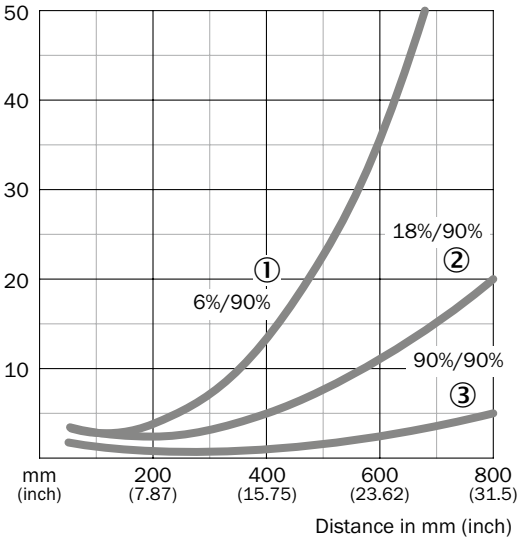

① Sensing range on black, 6 % remission
② Sensing range on gray, 18 % remission
③ Sensing range on white, 90 % remission

G

WTB12-3, infrared light

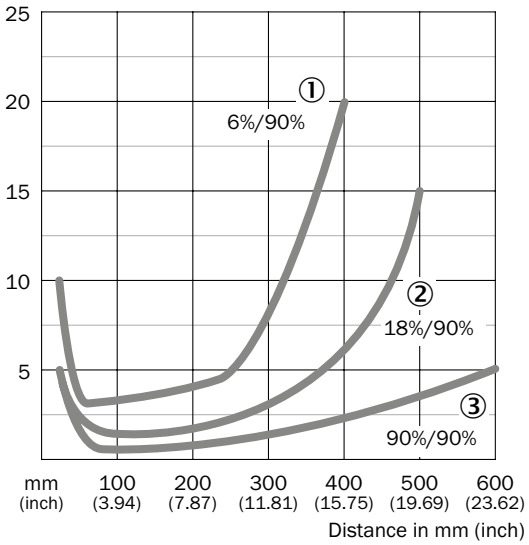

① Sensing range on black, 6 % remission
② Sensing range on gray, 18 % remission
③ Sensing range on white, 90 % remission

WTF12-3, 175 mm

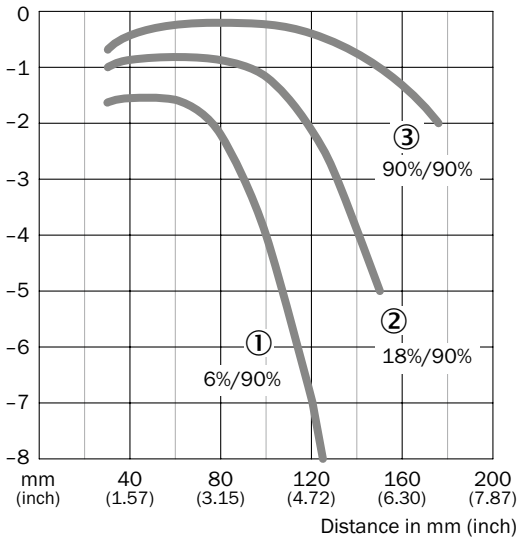

① Sensing range on black, 6 % remission
② Sensing range on gray, 18 % remission
③ Sensing range on white, 90 % remission

WTF12-3, 500 mm

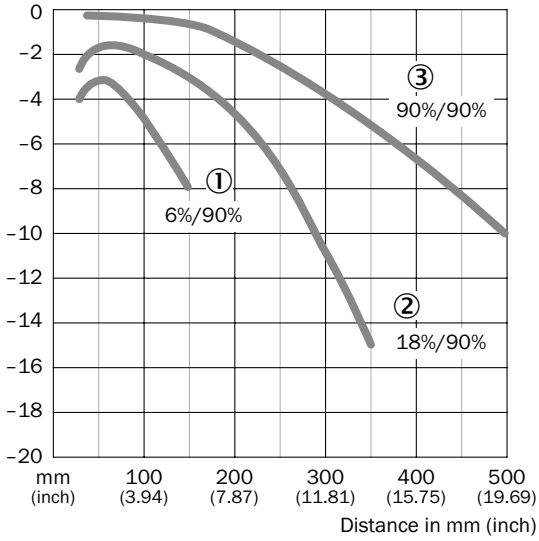

① Sensing range on black, 6 % remission
② Sensing range on gray, 18 % remission
③ Sensing range on white, 90 % remission

G

Operating reserve

WL12-3

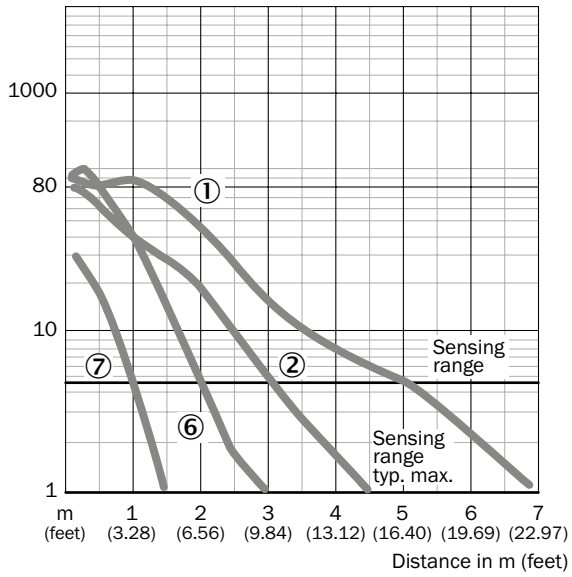

① Reflector type PL80A
② Reflector type C110A
⑥ Reflector type PL20A
⑦ Reflective tape

WL12-3, focused

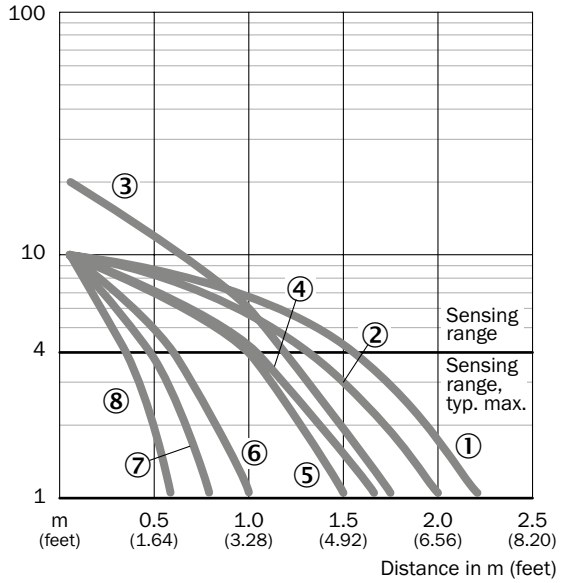

① Reflector type C110A
② Reflector type PL80A
③ Reflector type P205
④ Reflector type PL50A
⑤ Reflector type PL40A
⑥ Reflector type PL30A
⑦ Reflector type PL20A
⑧ Reflector type DG/IRF6000

WSE12-3

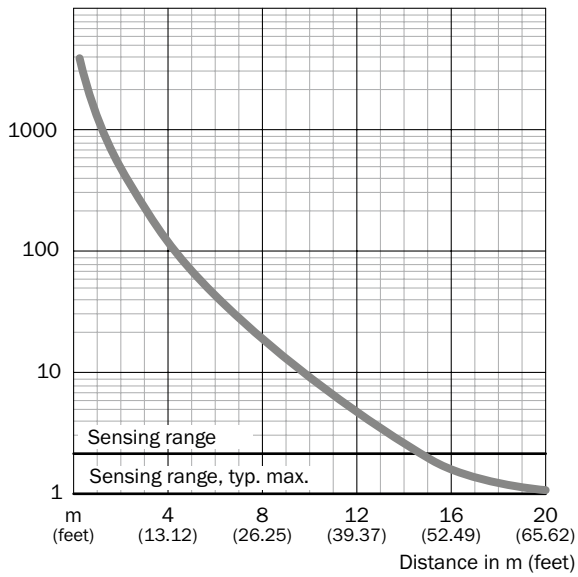

G

Bar diagrams

WTB12-3, red light, 350 mm

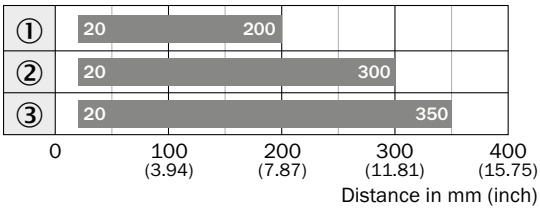

Sensing range

① Sensing range on black, 6 % remission
② Sensing range on gray, 18 % remission
③ Sensing range on white, 90 % remission

WTB12-3, infrared light

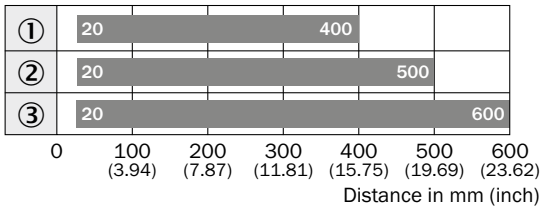

Sensing range

① Sensing range on black, 6 % remission
② Sensing range on gray, 18 % remission
③ Sensing range on white, 90 % remission

WTF12-3, 175 mm

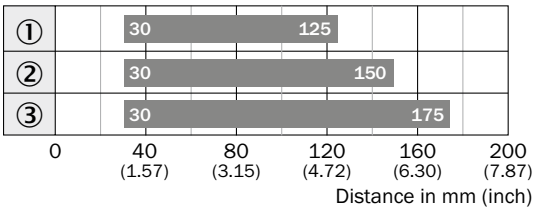

Sensing range

① Sensing range on black, 6 % remission
② Sensing range on gray, 18 % remission
③ Sensing range on white, 90 % remission

WTF12-3, 500 mm

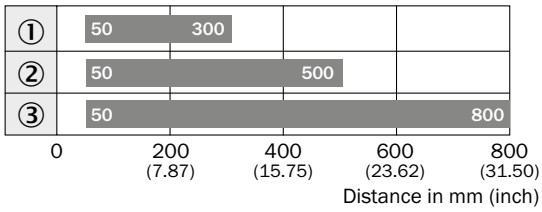

Sensing range

① Sensing range on black, 6 % remission
② Sensing range on gray, 18 % remission
③ Sensing range on white, 90 % remission

G

WL12-3

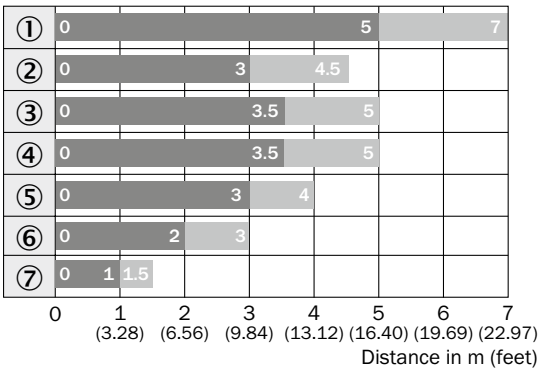

Sensing range Sensing range typ. max.

① PL80A
② C110A
③ PL50A
④ PL40A
⑤ PL30A
⑥ PL20A
⑦ Reflective tape Diamond Grade

WL12-3, focused

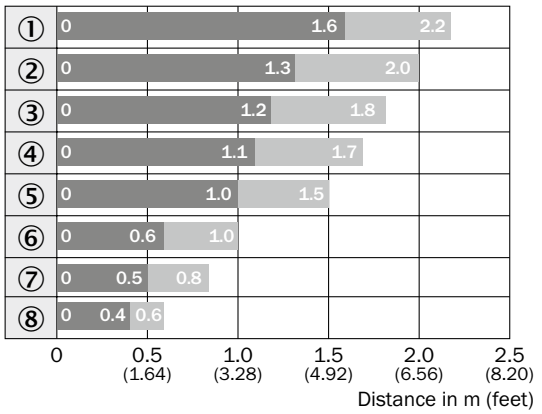

Sensing range Sensing range typ. max.

① C110A
② PL80A
③ P250F
④ PL50A
⑤ PL40A
⑥ C30A
⑦ PL20A
⑧ Reflective tape

Diamond Grade

WSE12-3

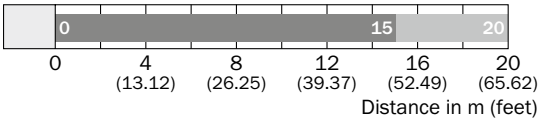

Sensing range Sensing range typ. max.

Light spot diameter

WTB12-3, line shaped light spot

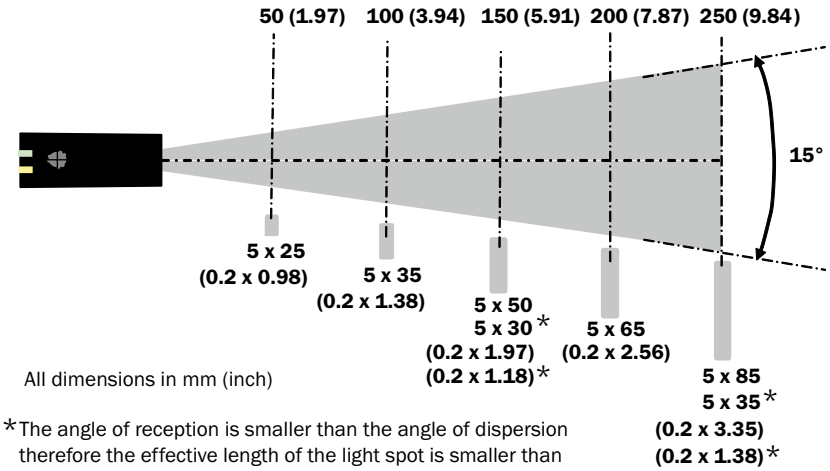

All dimensions in mm (inch)

*The angle of reception is smaller than the angle of dispersion therefore the effective length of the light spot is smaller than the real visible line-shaped light spot.

Connection diagram

Cd-072

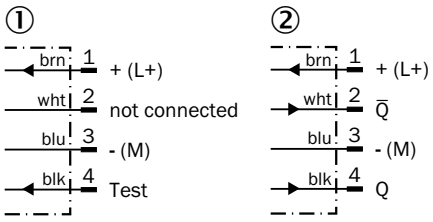

① Sender
② Receiver

Cd-083

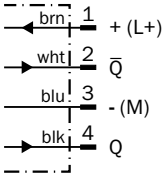

Cd-088

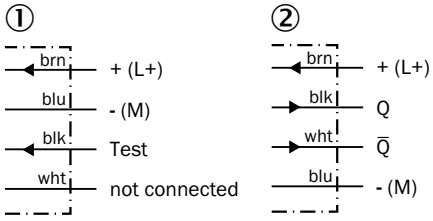

① Sender
② Receiver

Cd-094

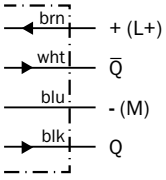

Cd-098

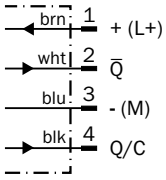

Cd-110

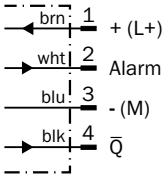

Cd-268

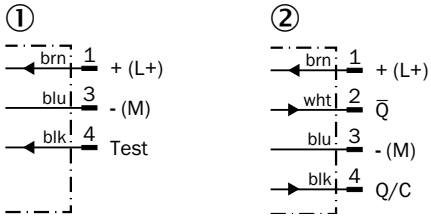

① Sender
② Receiver

G

Recommended accessories

Mounting brackets/plates

Mounting brackets

Figure	Material	Description	Model name	Part no.
	Stainless steel	Mounting bracket, large	BEF-WG-W12	2013942
		Mounting bracket, small	BEF-WK-W12	2012938

Plug connectors and cables

Connecting cable (female connector-open)

- **Cable material:** PVC

Figure	Connection type head A	Connection type head B	Connecting cable	Connector material	Enclosure rating	Model name	Part no.
	Female connector, M12, 4-pin, straight	Cable, open conductor heads	2 m, 4-wire	TPU	IP 67	DOL-1204-G02M	6009382
			5 m, 4-wire	TPU	IP 67	DOL-1204-G05M	6009866
	Female connector, M12, 4-pin, angled, with 3 LEDs	Cable, open conductor heads	2 m, 4-wire	TPU	IP 67	DOL-1204-L02M	6027945
			5 m, 4-wire	TPU	IP 67	DOL-1204-L05M	6027944
				PVC	IP 67, IP 69K	DOL-1204-L05MN	6028137
	Female connector, M12, 4-pin, angled	Cable, open conductor heads	2 m, 4-wire	TPU	IP 67	DOL-1204-W02M	6009383
			5 m, 4-wire	TPU	IP 67	DOL-1204-W05M	6009867
			10 m, 4-wire	TPU	IP 67	DOL-1204-W10M	6010541

G

Masks

Figure	Description	Model name	Part no.
	Mask card for WS/WE12-3 with 2 self-adhesive masks each for sender and receiver, slot width X: 0.5 mm/1.0 mm/1.5 mm/2.0 mm	BL-12-SKN	4031815

Universal bar clamp systems

Figure	Material	Description	Model name	Part no.
	Zinc plated steel (sheet), Diecast zinc (clamp)	Plate N02 for universal clamp bracket	BEF-KHS-N02	2051608
		Plate N03 for universal clamp bracket	BEF-KHS-N03	2051609
		Plate N04 for universal clamp bracket	BEF-KHS-N04	2051610

Device protection (mechanical)

Protective housing/tubes

Figure	Material	Description	Model name	Part no.
	Zinc plated steel (protective housing), Diecast zinc (clamp)	Protective housing for universal clamp	BEF-SG-W12-3	2045175

Reflectors

Angular

Figure	Material	Description	Model name	Part no.
	PMMA/ABS	Rectangular, screw connection, 47 mm x 47 mm	P250	5304812
		Rectangular, screw connection, 38 mm x 15 mm	PL20A	1012719
		Rectangular, screw connection, 56 mm x 28 mm	PL30A	1002314
		Rectangular, screw connection, 37 mm x 56 mm	PL40A	1012720
		Rectangular, screw connection, 80 mm x 80 mm	PL80A	1003865

Reflective tape

Figure	Description	Model name	Part no.
	Self-adhesive, 50 mm x 60 mm	REF-IRF-56	5314244

Round

Figure	Material	Description	Model name	Part no.
	PMMA/ABS	Round, screw connection	C110A	5304549

Terminal and alignment brackets

Terminal brackets

Figure	Material	Description	Model name	Part no.
	Steel, zinc coated	Double clamp bracket for dovetail mounting	BEF-DKH-W12	2013947
		Clamping block for dovetail mounting	BEF-KH-W12	2013285

→ **For additional accessories, please see page L-861**

G

Cost-effective photoelectric sensors for demanding applications

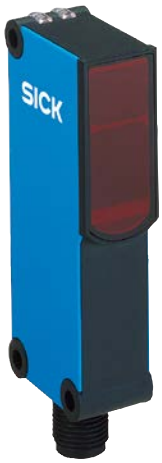

Class 2
LISTED 87LL
SIRIC®
optical ASIC
invented by SICK
PinPoint by SICK

G

Product description

The W14-2 series of photoelectric sensors from SICK offers reliable object detection at a cost-effective price for typical conveyor, packaging and automation applications. These sensors include features that help to simplify mounting and installation, which helps increase ease of use. Proximity, retro-reflective and through-beam versions are available with different options (mounting, LED, and technology) to suit application requirements. Variants with PinPoint LED technology, for example, have a bright, focused light spot that permits quick and easy alignment of the sensor to the detected object. An extensive range of accessories is available, including mounting systems, sensor protection equipment, reflectors, and connection systems.

At a glance

- Outstanding background suppression with OES3 technology
- Highly visible and precise light spot due to PinPoint LED in selected products
- Slim, durable plastic housing
- Complete sensor family with proximity, retro-reflective and through-beam variants

Your benefits

- Reliable object detection at a cost-effective price
- PinPoint LED technology provides a highly visible red light that enables quick and easy setup
- Broad product range gives users a variety of choices to fit their application
- Rugged plastic housing in a slim design simplifies installation
- Quick and easy installation using SICK accessories saves time

Additional information

→ **www.mysick.com/en/W14-2**
For more information, just enter the link or scan the QR code and get direct access to technical data, CAD design models, operating instructions, software, application examples and much more.

Detailed technical data

Features

	WT14-2	WL14-2	WS/WE14-2
Sensor principle	Photoelectric proximity sensor	Photoelectric retro-reflective sensor	Through-beam photoelectric sensor
Detection principle	Background suppression/ energetic (depending on type)	Standard optics	–
Dimensions (W x H x D)	17.6 mm x 75.5 mm x 33.5 mm		
Housing design (light emission)	Rectangular		
Sensing range max.	20 mm ... 1,500 mm [1] (depending on type)	0.15 m ... 17 m [2] (depending on type)	0 m ... 15 m
Sensing range	50 mm ... 1,500 mm [1] (depending on type)	0.15 m ... 12 m [2] (depending on type)	0 m ... 10 m
Type of light	Visible red light/Infrared light (depending on type)	Visible red light	
Light source	LED [3]/PinPoint-LED [3] (depending on type)		LED [3]
Angle of dispersion	–	Approx. 2°/approx. 0.9° (depending on type)	–
Wave length			
Visible red light	675 nm/637 nm (depending on type)	645 nm/637 nm (depending on type)	645 nm
Infrared light	870 nm	–	
Adjustment	Potentiometer, 4 turns Single teach-in button (depending on type)	Single teach-in button	–
Special feature	Line-shaped light spot (depending on type)	–	

[1] Object with 90 % reflectance (referred to standard white, DIN 5033)
[2] PL80A.
[3] Average service life of 100,000 h at T_A = +25 °C.

G

Mechanics/electronics

	WT14-2	WL14-2	WS/WE14-2
Supply voltage [1]	10 V DC ... 30 V DC		
Ripple [2]	5 V_{pp}		
Power consumption	≤ 25 mA [3] ... ≤ 55 mA [3] (depending on type)	≤ 35 mA [3]	–
Power consumption, sender	–		35 mA [3]
Power consumption, receiver	–		25 mA [3]
Output type	PNP/NPN (depending on type)		
Output function	Complementary		
Switching mode	Light/dark-switching		
Output current $I_{max.}$	≤ 100 mA		
Response time [4]	≤ 2.5 ms		
Switching frequency [5]	200 Hz		
Connection type	Cable, 2 m [6] Male connector, M12 (depending on type)	Cable, 2 m [6] Male connector, M12 Cable with connector, M12[6] (depending on type)	Cable, 2 m [6] Male connector, M12 (depending on type)
Circuit protection	A [7], C [8], D [9]		

	WT14-2	WL14-2	WS/WE14-2
Weight			
Connector M12, 4-pin	40 g		
Cable/cable with connector	120 g		
Polarisation filter	–	✔	–
Housing material	ABS		
Optics material	PMMA		
Enclosure rating	IP 67		
Ambient operating temperature	–30 °C ... +60 °C	–25 °C ... +60 °C	
Ambient storage temperature	–40 °C ... +70 °C		

[1] Limit values, operation in short-circuit protected network max. 8 A.
[2] May not exceed or fall short of V_S tolerances.
[3] Without load.
[4] Signal transit time with resistive load.
[5] With light/dark ratio 1:1.
[6] Do not bend below 0 °C.
[7] A = V_S connections reverse-polarity protected.
[8] C = interference suppression.
[9] D = outputs overcurrent and short-circuit protected.

Ordering information

Other models available at www.mysick.com/en/W14-2

WT14-2

- **Sensor principle:** photoelectric proximity sensor
- **Switching mode:** light/dark-switching

G

Detection principle	Type of light	Sensing range max. [1]	Light spot size (distance)	Output type	Adjustment	Connection	Connection diagram	Model name	Part no.
Background suppression	Visible red light	20 mm ... 250 mm	Ø 10 mm (250 mm)	PNP	Potentiometer, 4 turns	Cable, 4-wire 2 m PVC	Cd-094	WT14-2P132	1026055
						Connector M12, 4-pin	Cd-083	WT14-2P432	1026056
				NPN	Potentiometer, 4 turns	Cable, 4-wire 2 m PVC	Cd-094	WT14-2N132	1026072
						Connector M12, 4-pin	Cd-083	WT14-2N432	1026057
	Visible red light (PinPoint LED)	20 mm ... 1,300 mm	Ø 7 mm (300 mm)	PNP	Potentiometer, 4 turns	Connector M12, 4-pin	Cd-083	WT14-2P432S08	1045104
	Infrared light	20 mm ... 500 mm	Ø 14 mm (300 mm)	PNP	Potentiometer, 4 turns	Cable, 4-wire 2 m PVC	Cd-094	WT14-2P122	1026051
						Connector M12, 4-pin	Cd-083	WT14-2P422	1026052
				NPN	Potentiometer, 4 turns	Cable, 4-wire 2 m PVC	Cd-094	WT14-2N122	1026053
						Connector M12, 4-pin	Cd-083	WT14-2N422	1026054
Energetic	Infrared light	50 mm ... 1,500 mm	Ø 56 mm (1,000 mm)	PNP	Single teach-in button	Cable, 4-wire 2 m PVC	Cd-094	WT14-2P111	1026058
						Connector M12, 4-pin	Cd-083	WT14-2P411	1026059
				NPN	Single teach-in button	Cable, 4-wire 2 m PVC	Cd-094	WT14-2N111	1026060
						Connector M12, 4-pin	Cd-083	WT14-2N411	1026062

[1] Object with 90 % reflectance (referred to standard white, DIN 5033)

WT14-2, line-shaped light spot

- **Sensor principle:** photoelectric proximity sensor
- **Detection principle:** background suppression
- **Switching mode:** light/dark-switching

Type of light	Sensing range max. [1]	Output type	Adjustment	Connection	Connection diagram	Model name	Part no.
Infrared light	20 mm ... 500 mm	PNP	Potentiometer, 4 turns	Connector M12, 4-pin	Cd-083	WT14-2P422S03	1041679

[1] Object with 90 % reflectance (referred to standard white, DIN 5033)

WL14-2

- **Sensor principle:** photoelectric retro-reflective sensor
- **Detection principle:** standard optics
- **Switching mode:** light/dark-switching
- **Polarisation filter:** ✔

Type of light	Sensing range max. [1]	Light spot size (distance)	Output type	Adjustment	Connection	Connection diagram	Model name	Part no.
Visible red light (LED)	0.15 m ... 6 m	Ø 140 mm (4 m)	PNP	–	Cable, 4-wire 2 m PVC	Cd-094	WL14-2P130	1026050
					Connector M12, 4-pin	Cd-083	WL14-2P430	1026049
			NPN	–	Cable, 4-wire 2 m PVC	Cd-094	WL14-2N130	1026047
					Connector M12, 4-pin	Cd-083	WL14-2N430	1026048
Visible red light (PinPoint LED)	0.15 m ... 17 m	Ø 30 mm (2 m)	PNP	Single teach-in button	Connector M12, 4-pin	Cd-083	WL14-2P431	1050271

[1] PL80A.

WL14-2, detecting objects wrapped in film

- **Sensor principle:** photoelectric retro-reflective sensor
- **Detection principle:** standard optics
- **Switching mode:** light/dark-switching
- **Polarisation filter:** ✔

Type of light	Sensing range max. [1]	Light spot size (distance)	Output type	Connection	Connection diagram	Model name	Part no.
Visible red light	0.5 m ... 5 m	Ø 140 mm (4 m)	PNP	Cable with connector M12, 4-pin 0.29 m PVC	Cd-101	WL14-2K930S11	1046864
				Cable with connector M12, 4-pin 0.1 m PVC	Cd-083	WL14-2P030S13	1051200
				Connector M12, 4-pin	Cd-083	WL14-2P430S03	1029850

[1] PL80A.

WS/WE14-2

- **Sensor principle:** through-beam photoelectric sensor
- **Switching mode:** light/dark-switching

Type of light	Sensing range max.	Light spot size (distance)	Output type	Connection	Connection diagram	Model name	Part no.
Visible red light	0 m ... 15 m	Ø 300 mm (10 mm)	PNP	Cable, 4-wire 2 m PVC	Cd-074	WS/WE14-2P130	1026430
				Connector M12, 4-pin	Cd-072	WS/WE14-2P430	1026431
			NPN	Cable, 4-wire 2 m PVC	Cd-074	WS/WE14-2N130	1026432
				Connector M12, 4-pin	Cd-072	WS/WE14-2N430	1026433

Dimensional drawings

Dimensions in mm (inch)

WT14-2, potentiometer

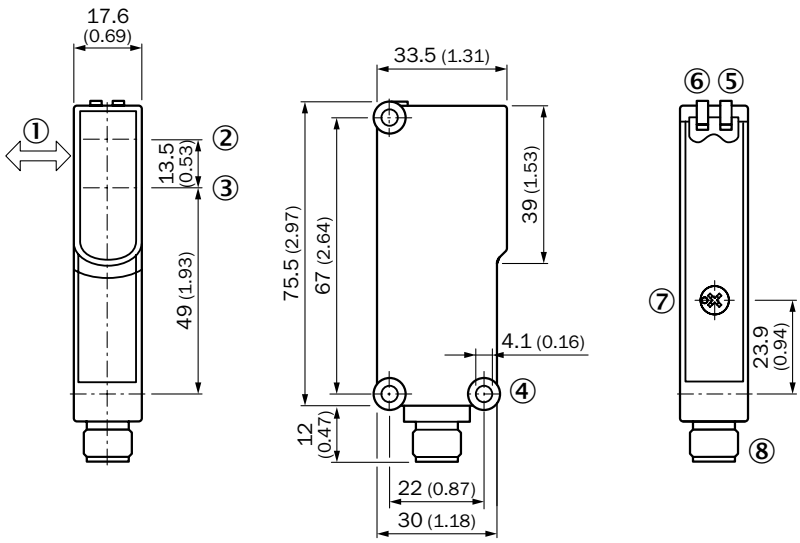

① Standard direction of the material being detected
② Center of optical axis, sender
③ Center of optical axis, receiver
④ Mounting hole ø 4.1 mm
⑤ Status indicator LED, yellow: Status of received light beam
⑥ Status indicator LED green: power on
⑦ Potentiometer
⑧ Connector M12, 4-pin or 2 m cable

WT14-2, single teach-in button

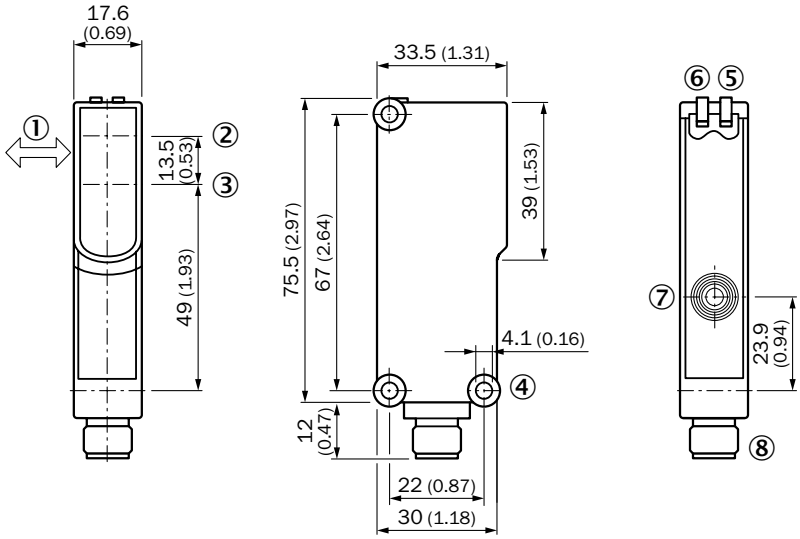

① Standard direction of the material being detected
② Center of optical axis, sender
③ Center of optical axis, receiver
④ Mounting hole ø 4.1 mm
⑤ Status indicator LED, yellow: Status of received light beam
⑥ Status indicator LED green: power on
⑦ Teach-in button
⑧ Connector M12, 4-pin or 2 m cable

G

WL14-2

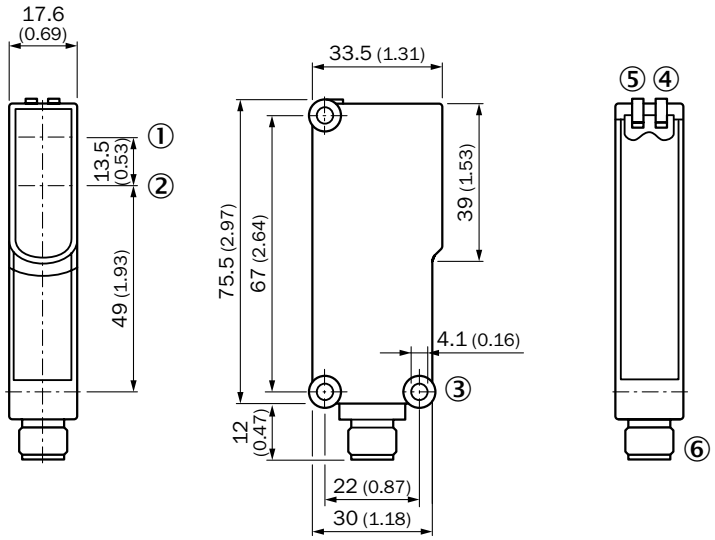

① Center of optical axis, sender
② Center of optical axis, receiver
③ Mounting hole ø 4.1 mm
④ Status indicator LED, yellow: Status of received light beam
⑤ Status indicator LED green: power on
⑥ Connector M12, 4-pin or 2 m cable

WS/WE14-2

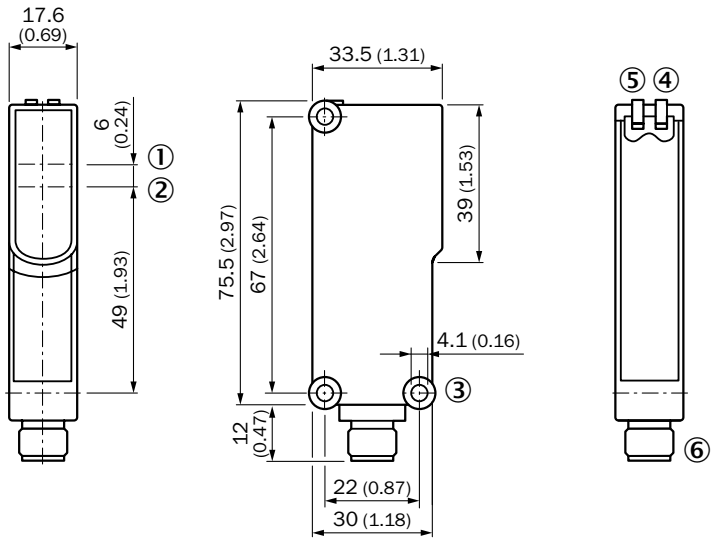

① Optical axis, sender
② Optical axis, receiver
③ Mounting hole ø 4.1 mm
④ Status indicator LED, yellow: Status of received light beam
⑤ Status indicator LED green: power on
⑥ Connector M12, 4-pin or 2 m cable

G

Adjustments

Potentiometer

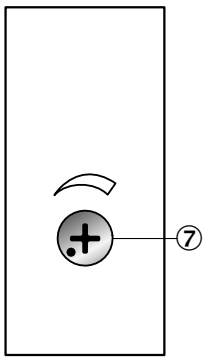

⑦ Sensing range adjustment: potentiometer, 4-turn

Single teach-in button

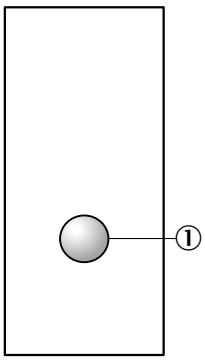

① Teach-in button

Characteristic curves

Black-white shift

WT14-2, red light, 250 mm

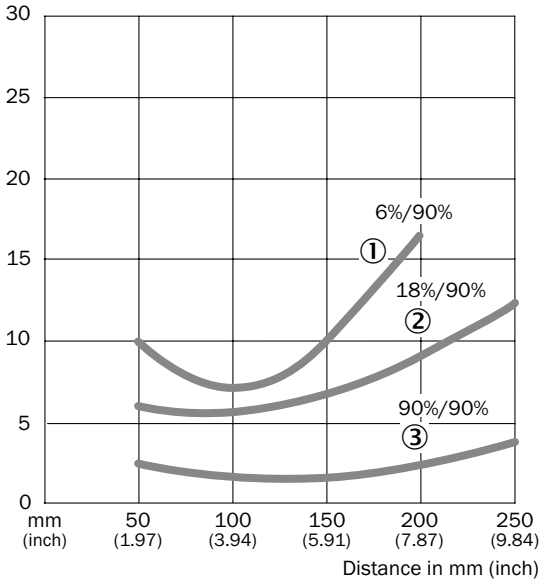

① Sensing range on black, 6 % remission
② Sensing range on gray, 18 % remission
③ Sensing range on white, 90 % remission

WT14-2, red light, 1300 mm

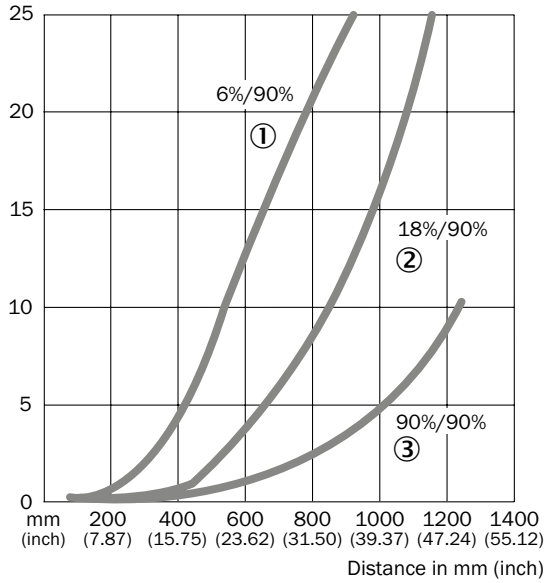

① Sensing range on black, 6 % remission
② Sensing range on gray, 18 % remission
③ Sensing range on white, 90 % remission

WT14-2, infrared light, 500 mm

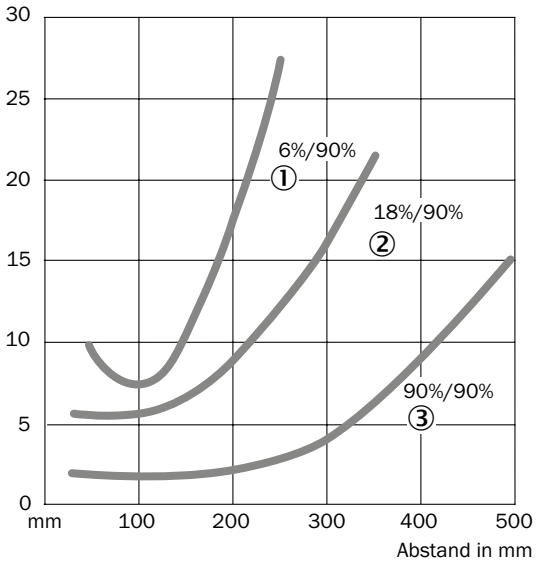

① Sensing range on black, 6 % remission
② Sensing range on gray, 18 % remission
③ Sensing range on white, 90 % remission

WT14-2, infrared light, 1500 mm

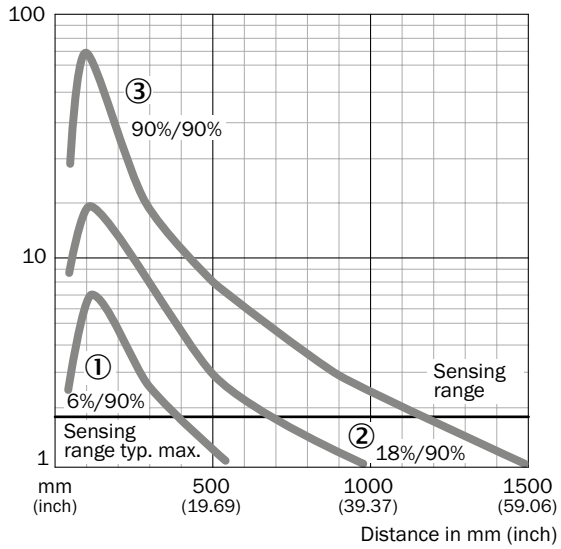

① Sensing range on black, 6 % remission
② Sensing range on gray, 18 % remission
③ Sensing range on white, 90 % remission

G

Operating reserve

WL14-2, 6 m

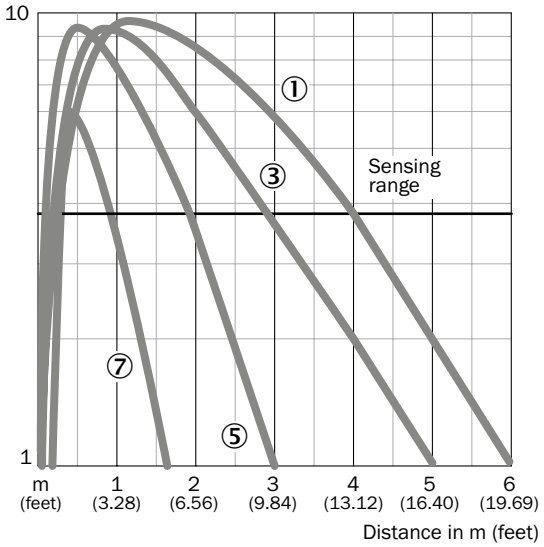

① PL80A
③ PL40A
⑤ PL20A
⑦ Reflective tape Diamond Grade

WL14-2, 17 m

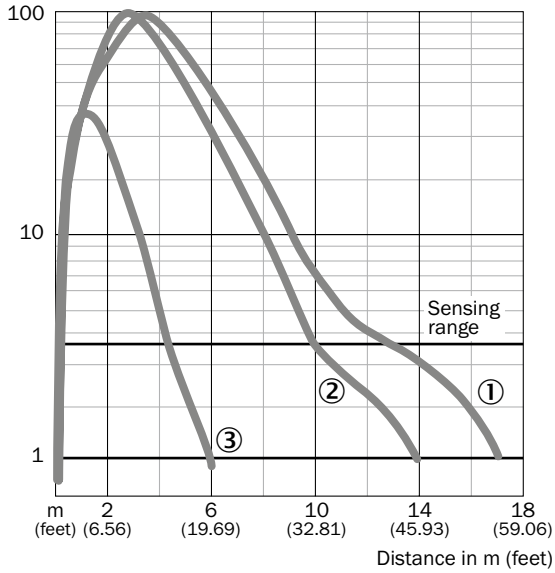

① PL80A
② PL40A
③ Reflective tape REF-IRF-56

WS/WE14-2

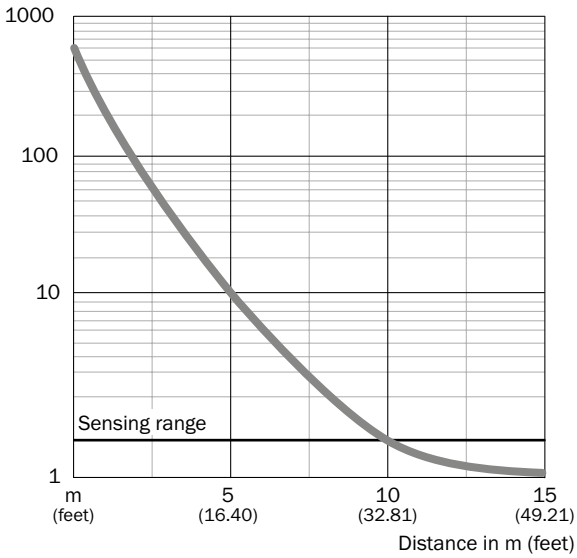

G

Bar diagrams

WT14-2, red light, 250 mm

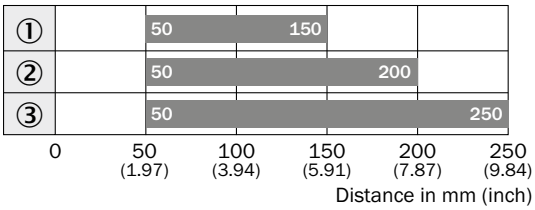

Sensing range

① Sensing range on black, 6 % remission
② Sensing range on gray, 18 % remission
③ Sensing range on white, 90 % remission

WT14-2, red light, 1300 mm

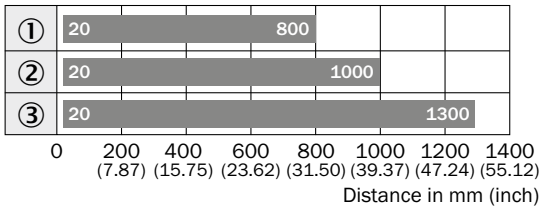

Sensing range

① Sensing range on black, 6 % remission
② Sensing range on gray, 18 % remission
③ Sensing range on white, 90 % remission

WT14-2, infrared light, 500 mm

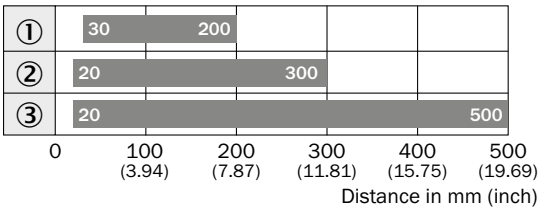

Sensing range

① Sensing range on black, 6 % remission
② Sensing range on gray, 18 % remission
③ Sensing range on white, 90 % remission

WT14-2, infrared light, 1500 mm

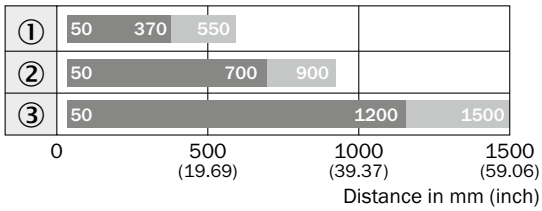

Sensing range
Sensing range typ. max.

① Sensing range on black, 6 % remission
② Sensing range on gray, 18 % remission
③ Sensing range on white, 90 % remission

G

WL14-2, 6 m

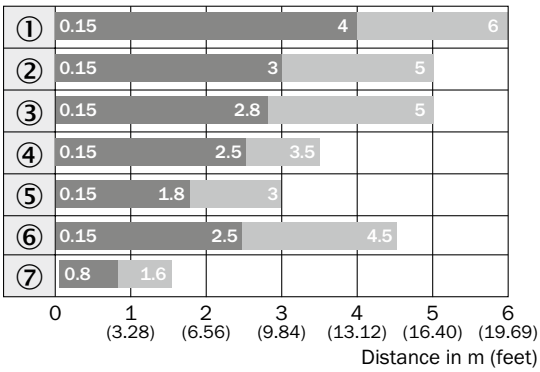

Sensing range
Sensing range max.

① PL80A
② PL50A
③ PL40A
④ PL30A
⑤ PL20A
⑥ C110A
⑦ Reflective tape Diamond Grade

WL14-2, 17 m

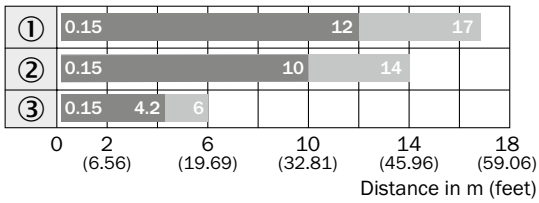

Sensing range
Sensing range max.

① PL80A
② PL40A
③ Reflective tape REF-IRF-56

WS/WE14-2

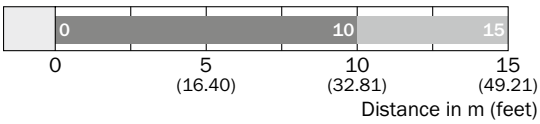

Sensing range
Sensing range typ. max.

Connection diagram

Cd-072

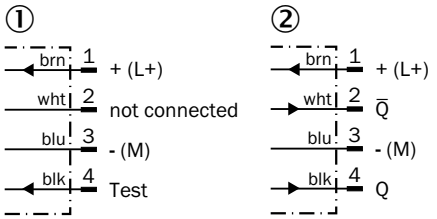

① Sender
② Receiver

Cd-074

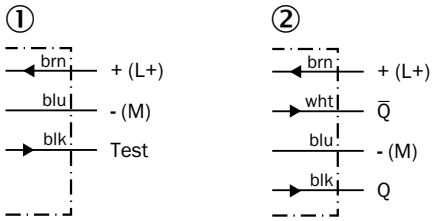

① Sender
② Receiver

Cd-083

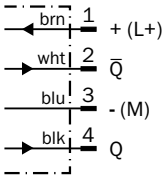

Cd-094

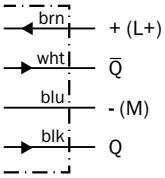

Cd-101

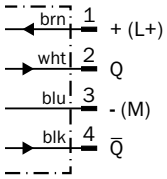

Recommended accessories

Mounting brackets/plates

Mounting brackets

Figure	Material	Description	Model name	Part no.
	Steel, zinc coated	Mounting bracket	BEF-WN-W14	2019084
		Mounting bracket with hinged arm	BEF-WN-W18	2009317

Plug connectors and cables

Connecting cable (female connector-open)

- **Cable material:** PVC
- **Connector material:** TPU

Figure	Connection type head A	Connection type head B	Connecting cable	Enclosure rating	Model name	Part no.
	Female connector, M12, 4-pin, straight	Cable, open conductor heads	2 m, 4-wire	IP 67	DOL-1204-G02M	6009382
			5 m, 4-wire	IP 67	DOL-1204-G05M	6009866
	Female connector, M12, 4-pin, angled	Cable, open conductor heads	2 m, 4-wire	IP 67	DOL-1204-W02M	6009383
			5 m, 4-wire	IP 67	DOL-1204-W05M	6009867

G

Female connector (ready to assemble)

Figure	Connection type head A	Connection type head B	Connector material	Enclosure rating	Model name	Part no.
	Female connector, M12, 4-pin, straight	Screw-type terminals	PBT	IP 67	DOS-1204-G	6007302
	Female connector, M12, 4-pin, angled	Screw-type terminals	PBT	IP 67	DOS-1204-W	6007303

Male connector (ready to assemble)

Figure	Connection type head A	Connection type head B	Connector material	Enclosure rating	Model name	Part no.
	Male connector, M12, 4-pin, straight	Screw-type terminals	PBT	IP 67	STE-1204-G	6009932
	Male connector, M12, 4-pin, angled	Screw-type terminals	PBT	IP 67	STE-1204-W	6022084

Universal bar clamp systems

Figure	Material	Description	Model name	Part no.
	Zinc diecast	Universal bar clamp for mounting bars with 12 mm diameter	BEF-KHS-KH3	5322626
	Zinc plated steel (sheet), Diecast zinc (clamp)	Plate N03 for universal clamp bracket	BEF-KHS-N03	2051609
		Plate N04 for universal clamp bracket	BEF-KHS-N04	2051610

G

Device protection (mechanical)

Protective housing/tubes

Figure	Material	Description	Model name	Part no.
	Zinc plated steel (protective housing), Diecast zinc (clamp)	Protective housing for universal clamp	BEF-SG-W14	2058124
			BEF-SG-W27	2039601

Reflectors

Angular

Figure	Material	Description	Model name	Part no.
	PMMA/ABS	Rectangular, screw connection, 47 mm x 47 mm	P250	5304812
		Rectangular, screw connection, 38 mm x 15 mm	PL20A	1012719
		Rectangular, screw connection, 56 mm x 28 mm	PL30A	1002314
		Rectangular, screw connection, 37 mm x 56 mm	PL40A	1012720
		Rectangular, screw connection, 80 mm x 80 mm	PL80A	1003865

Reflective tape

Figure	Description	Model name	Part no.
	Self-adhesive, 50 mm x 60 mm	REF-IRF-56	5314244

Round

Figure	Material	Description	Model name	Part no.
	PMMA/ABS	Round, screw connection	C110A	5304549

→ **For additional accessories, please see page L-861**

G

Reliable object detection for demanding applications

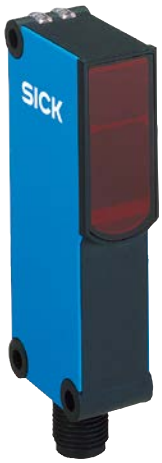

Product description

SICK's W18-3 photoelectric sensor series reliably detects objects under difficult application conditions. Different variants are available, including proximity sensors with high-precision background suppression, retro-reflective sensors with autocollimation and through-beam sensors with high operating reserves.

These sensors are immune to ambient light, background reflections and light absorbing objects, making them a reliable sensor solution. The W18-3 series can also be customized according to the customer's requirements in critical applications.

At a glance

- Best-in-class optical performance due to superior OES technology
- Autocollimation optics
- Background suppression with second sender LED
- Slim, durable plastic housing
- Operation via double teach-in push-button or potentiometer
- Wide variety of options for operation, connection, and optics

Your benefits

- Reliable object detection due to best-in-class background suppression and resistance to ambient light
- A wide range of product variants provides increased user flexibility
- Less downtime in industrial environments

Additional information

→ **www.mysick.com/en/W18-3**

For more information, just enter the link or scan the QR code and get direct access to technical data, CAD design models, operating instructions, software, application examples and much more.

Detailed technical data

Features

	WT18-3	WT18-3 Ex	WL18-3	WL18-3 Ex	WS/WE18-3
Sensor principle	Photoelectric proximity sensor		Photoelectric retro-reflective sensor		Through-beam photoelectric sensor
Detection principle	Background suppression		Autocollimation		–
Dimensions (W x H x D)	17.6 mm x 75.5 mm x 33.5 mm				
Housing design (light emission)	Rectangular				
Sensing range max.	10 mm ... 1,000 mm [1] (depending on type)	10 mm ... 1,000 mm [1]	0 m ... 7 m [2]		0 m ... 20 m
Sensing range	50 mm ... 1,000 mm [1] (depending on type)	50 mm ... 1,000 mm [1]	0 m ... 5 m [2]		–
Type of light	Visible red light/ Infrared light (depending on type)	Infrared light	Visible red light		Visible red light/ Infrared light (depending on type)
Light source [3]	LED				
Wave length					
Visible red light	675 nm	–	645 nm		
Infrared light	870 nm		–		880 nm
Adjustment	Potentiometer, 4 turns Double teach-in button Single teach-in button (depending on type)	Potentiometer, 4 turns	Potentiometer, 1 turn		

[1] Object with 90 % reflectance (referred to standard white, DIN 5033)
[2] PL80A.
[3] Average service life of 100,000 h at T_A = +25 °C.

Mechanics/electronics

	WT18-3	WT18-3 Ex	WL18-3	WL18-3 Ex	WS/WE18-3
Supply voltage [1]	10 V DC ... 30 V DC				
Ripple [2]	< 5 V_{pp}				
Power consumption	40 mA [3] ... 55 mA [3]	55 mA [3]	40 mA [3]		–
Power consumption, sender	–				< 45 mA [3]
Power consumption, receiver	–				< 35 mA [3]
Output type	PNP/NPN (depending on type)	PNP	PNP/NPN (depending on type)	PNP	PNP/NPN (depending on type)
Output function	Complementary				
Switching mode	Light/dark-switching				
Output current $I_{max.}$	100 mA				
Response time [4]	< 700 µs		< 500 µs		
Switching frequency [5]	700 Hz		1,000 Hz		
Angle of reception					
Visible red light	–		1,8°		1,5°
Infrared light	–		–		4,5°

G

	WT18-3	WT18-3 Ex	WL18-3	WL18-3 Ex	WS/WE18-3
Connection type	Cable, 2 m [6] Male connector, M12 (depending on type)	Cable with connector, M12 [6]	Cubic connector Cable [6] Male connector, M12 (depending on type)	Cable with connector, M12 [6]	Cubic connector Cable [6] Male connector, M12 (depending on type)
Circuit protection	A [7], C [8], D [9]				
Weight					
Cubic connector	–		70 g	–	70 g
Connector	–		40 g	–	40 g
Cable with connector	–	300 g	–	300 g	–
Cable, 4-wire	120 g/260 g	–	120 g	–	120 g
Cable, 5-wire	–		170 g	–	
Polarisation filter	–		✔		–
Housing material	ABS				
Optics material	PMMA				
Enclosure rating	IP 67		IP 67/IP 65 (depending on type)	IP 67	IP 67/IP 65 (depending on type)
Test input sender off	–		TE to 0 V/ TE to V_S (depending on type)	–	TE to 0 V
ATEX marking	–	EX II 3D IP67 T70 °C, EX II 3G EEx nA II T4 X [10]	–	EX II 3D IP67 T70 °C, Ex II 3G EEx nA II T4 X [10]	–
Hazardous area category	–	3D, 3G	–	3D, 3G	–
Test input	–		–/✔	–	
Ambient operating temperature	–40 °C ... +60 °C				
Ambient storage temperature	–40 °C ... +75 °C				

[1] Limit values, operation in short-circuit protected network max. 8 A.
[2] May not exceed or fall short of V_S tolerances.
[3] Without load.
[4] Signal transit time with resistive load.
[5] With light/dark ratio 1:1.
[6] Do not bend below 0 °C.
[7] A = V_S connections reverse-polarity protected.
[8] C = interference suppression.
[9] D = outputs overcurrent and short-circuit protected.
[10] Conformity with directives. Explosion prevention: Directive 94/9/EC.

G

Ordering information

Other models available at www.mysick.com/en/W18-3

WT18-3

- **Sensor principle:** photoelectric proximity sensor
- **Detection principle:** background suppression
- **Switching mode:** light/dark-switching

Type of light	Sensing range max. [1]	Light spot size (distance)	Output type	Adjustment	Connection	Connection diagram	Model name	Part no.
Visible red light	10 mm ... 600 mm	Ø 15 mm (300 mm)	PNP	Potentiometer, 4 turns	Cable, 4-wire 2 m PVC	Cd-094	WT18-3P130	1025895
					Cable, 4-wire 5 m PVC	Cd-094	WT18-3P230	1026559
					Connector M12, 4-pin	Cd-083	WT18-3P430	1025896
				Double teach-in button	Cable, 4-wire 2 m PVC	Cd-094	WT18-3P131	1026034
					Connector M12, 4-pin	Cd-083	WT18-3P431	1026032
			NPN	Potentiometer, 4 turns	Cable, 4-wire 2 m PVC	Cd-094	WT18-3N130	1025897
					Connector M12, 4-pin	Cd-083	WT18-3N430	1025898
				Double teach-in button	Cable, 4-wire 2 m PVC	Cd-094	WT18-3N131	1028040
					Connector M12, 4-pin	Cd-083	WT18-3N431	1026035
Infrared light	10 mm ... 700 mm	Ø 20 mm (400 mm)	PNP	Potentiometer, 4 turns	Cable, 4-wire 2 m PVC	Cd-094	WT18-3P110	1025887
					Cable, 4-wire 5 m PVC	Cd-094	WT18-3P210	1025888
					Connector M12, 4-pin	Cd-083	WT18-3P410	1025889
				Double teach-in button	Cable, 4-wire 2 m PVC	Cd-094	WT18-3P111	1026033
					Connector M12, 4-pin	Cd-083	WT18-3P411	1026031
			NPN	Potentiometer, 4 turns	Cable, 4-wire 2 m PVC	Cd-094	WT18-3N110	1025891
					Cable, 4-wire 5 m PVC	Cd-094	WT18-3N210	1025892
					Connector M12, 4-pin	Cd-083	WT18-3N410	1025893
	10 mm ... 1,000 mm	Ø 30 mm (600 mm)	PNP	Potentiometer, 4 turns	Cable, 4-wire 2 m PVC	Cd-094	WT18-3P120	1025904
					Connector M12, 4-pin	Cd-083	WT18-3P420	1025905
						Cd-102	WT18-3K420	1061203
				Double teach-in button	Connector M12, 4-pin	Cd-083	WT18-3P421	1026383

[1] Object with 90 % reflectance (referred to standard white, DIN 5033)

WT18-3 Ex

- **Sensor principle:** photoelectric proximity sensor
- **Detection principle:** background suppression
- **Switching mode:** light/dark-switching
- **Type of light:** visible red light
- **Connection:** cable with connector M12, 4-pin 0.29 m PVC

Sensing range max. [1]	Light spot size (distance)	Output type	Adjustment	Hazardous area category	Connection diagram	Model name	Part no.
10 mm ... 1,000 mm	Ø 30 mm (600 mm)	PNP	Potentiometer, 4 turns	3D, 3G	Cd-083	WT18X-3P920	1029901

[1] Object with 90 % reflectance (referred to standard white, DIN 5033)

G

WL18-3

- **Sensor principle:** photoelectric retro-reflective sensor
- **Detection principle:** autocollimation
- **Switching mode:** light/dark-switching
- **Type of light:** visible red light
- **Polarisation filter:** ✔

Sensing range max. [1]	Light spot size (distance)	Output type	Adjustment	Test input	Connection	Connection diagram	Model name	Part no.
0 m ... 7 m	Ø 40 mm (2 m)	PNP	Potentiometer, 1 turn	–	Cable, 4-wire 2 m PVC	Cd-094	WL18-3P130	1025909
					Connector M12, 4-pin	Cd-083	WL18-3P430	1025911
				✔	Cubic connector, 6-pin	Cd-178	WL18-3P630	1025912
					Cable, 5-wire 2 m PVC	Cd-141	WL18-3P730	1026029
		NPN		–	Cable, 4-wire 2 m PVC	Cd-094	WL18-3N130	1025913
					Connector M12, 4-pin	Cd-083	WL18-3N430	1025915
				✔	Cubic connector, 6-pin	Cd-178	WL18-3N630	1025916
					Cable, 5-wire 2 m PVC	Cd-141	WL18-3N730	1026030

[1] PL80A.

WL18-3 Ex

- **Sensor principle:** photoelectric retro-reflective sensor
- **Detection principle:** autocollimation
- **Switching mode:** light/dark-switching
- **Type of light:** visible red light
- **Polarisation filter:** ✔
- **Connection:** cable with connector M12, 4-pin 0.29 m PVC

G

Sensing range max. [1]	Light spot size (distance)	Output type	Adjustment	Hazardous area category	Connection diagram	Model name	Part no.
0 m ... 7 m	Ø 40 mm (2 m)	PNP	Potentiometer, 1 turn	3D, 3G	Cd-083	WL18X-3P930	1029902

[1] PL80A.

WS/WE18-3

- **Sensor principle:** through-beam photoelectric sensor
- **Switching mode:** light/dark-switching

Type of light	Sensing range max.	Light spot size (distance)	Output type	Adjustment	Connection	Connection diagram	Model name	Part no.
Visible red light	0 m ... 20 m	Ø 450 mm (15 m)	PNP	Potentiometer, 1 turn	Cable, 4-wire 2 m PVC	Cd-074	WS/WE18-3P130	1025922
					Connector M12, 4-pin	Cd-072	WS/WE18-3P430	1025923
					Cubic connector, 6-pin	Cd-075	WS/WE18-3P630	1025924
			NPN	Potentiometer, 1 turn	Cable, 4-wire 2 m PVC	Cd-074	WS/WE18-3N130	1025925
					Cubic connector, 6-pin	Cd-075	WS/WE18-3N630	1025926
Infrared light	0 m ... 20 m	Ø 950 mm (15 m)	PNP	Potentiometer, 1 turn	Cable, 4-wire 2 m PVC	Cd-074	WS/WE18-3P110	1025928
					Connector M12, 4-pin	Cd-072	WS/WE18-3P410	1025927

Dimensional drawings

Dimensions in mm (inch)

WT18-3, potentiometer

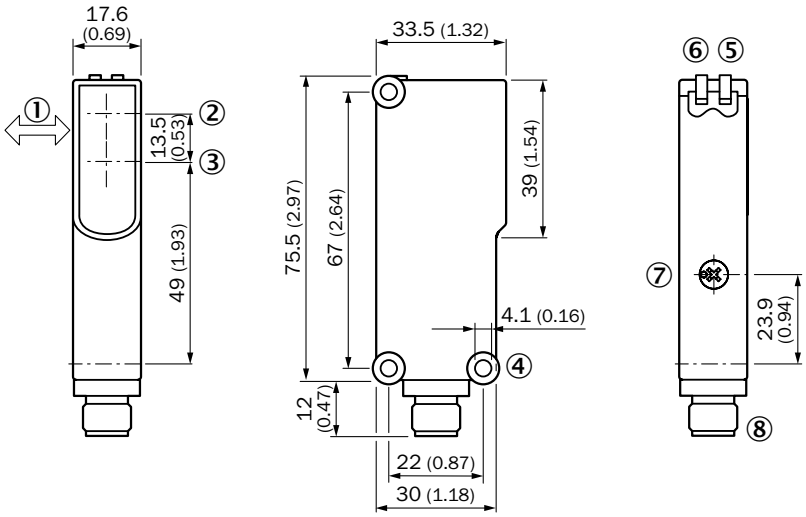

① Standard direction of the material being detected
② Center of optical axis, sender
③ Center of optical axis, receiver
④ Mounting hole ø 4.1 mm
⑤ Status indicator LED, yellow: Status of received light beam
⑥ Status indicator LED green: power on
⑦ Sensing range adjustment: potentiometer, 4-turn
⑧ Connector M12, 4-pin or 2 m cable or cubic plug, 6-pin

WTB18-3, double teach-in button

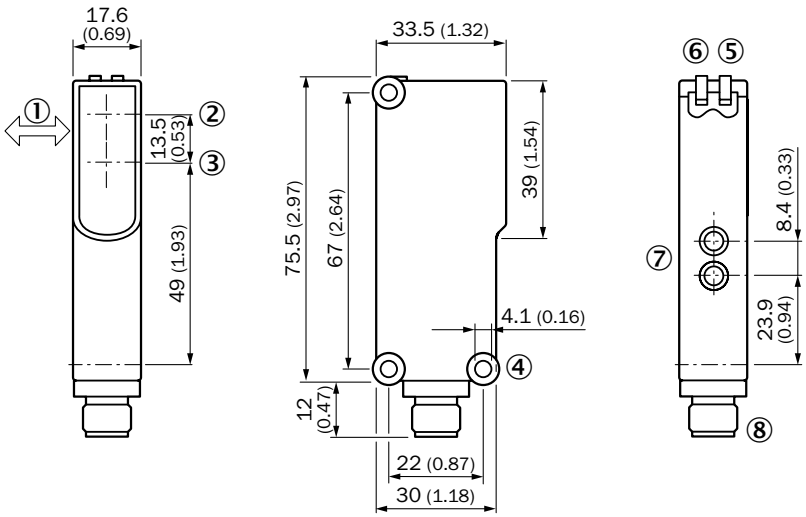

① Standard direction of the material being detected
② Center of optical axis, sender
③ Center of optical axis, receiver
④ Mounting hole ø 4.1 mm
⑤ Status indicator LED, yellow: Status of received light beam
⑥ Status indicator LED green: power on
⑦ Sensing range adjustment: double teach-in button
⑧ Connector M12, 4-pin or 2 m cable

G

WT18-3 Ex

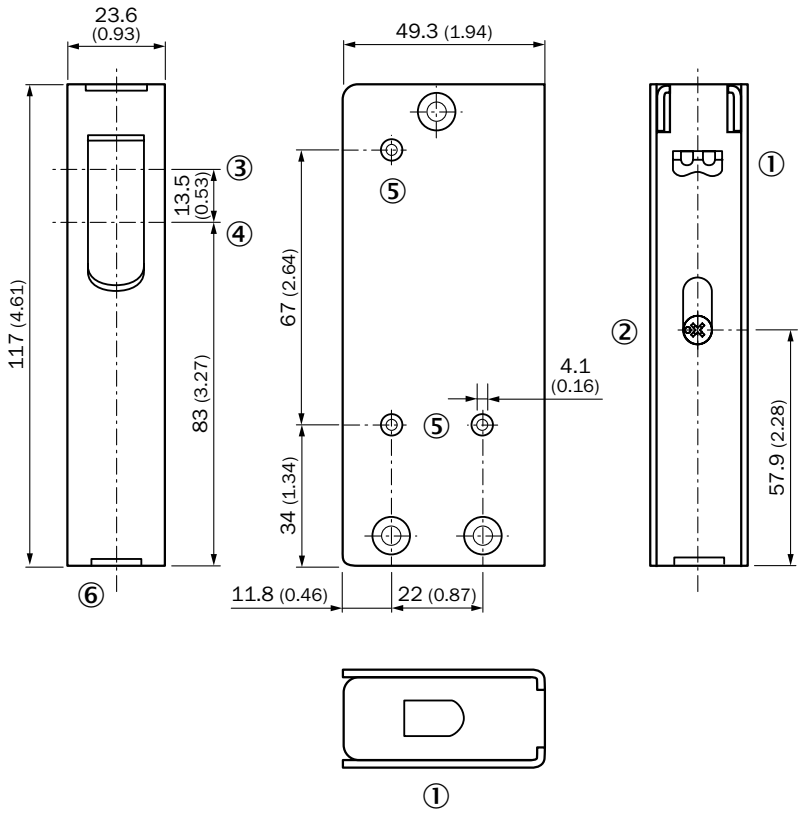

① LED indicator
② Sensing range adjustment
③ Center of optical axis, sender
④ Center of optical axis, receiver
⑤ Mounting hole ø 4.1 mm
⑥ Connection

WL18-3, WS/WE18-3

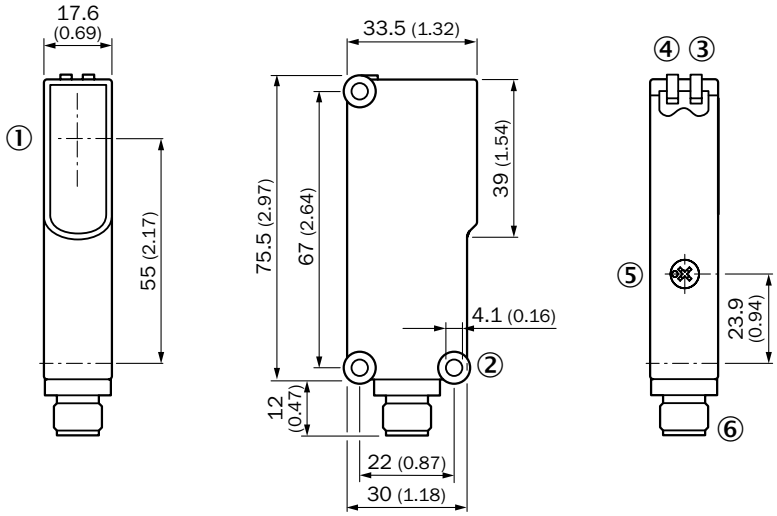

① Center of optical axis
② Mounting hole ø 4.1 mm
③ Status indicator LED, yellow: Status of received light beam
④ Status indicator LED green: power on
⑤ Sensitivity control; Potentiometer 270° on WE
⑥ Connector M12, 4-pin or 2 m cable or cubic plug, 6-pin

WL18-3 Ex

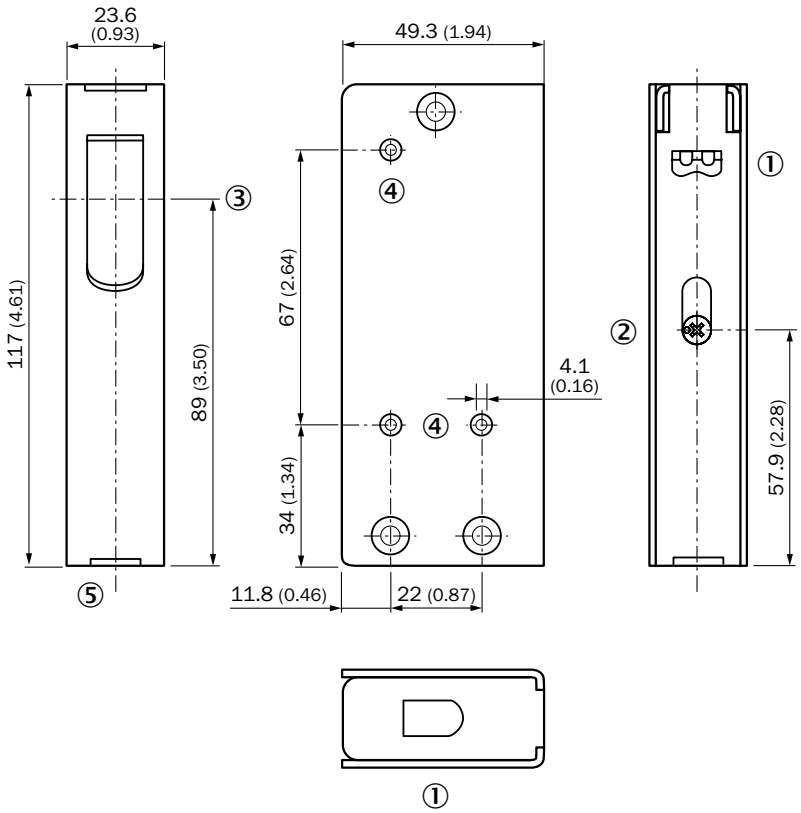

① LED indicator
② Sensing range adjustment
③ Center of optical axis, sender
④ Mounting hole ø 4.1 mm
⑤ Connection

Adjustments

Potentiometer

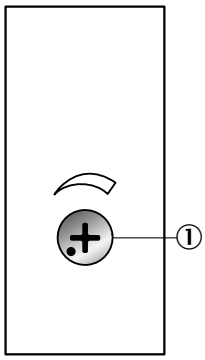

① Sensing range adjustment: potentiometer, 4-turn

Double teach-in button

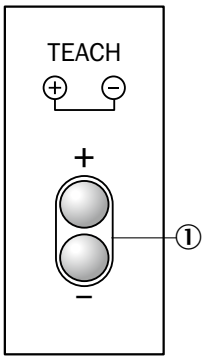

① Sensing range adjustment: double teach-in button

Single teach-in button

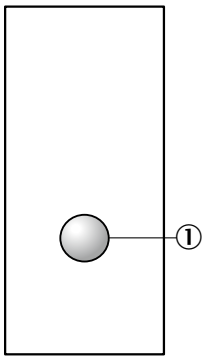

① Teach-in button

G

Characteristic curves

Black-white shift

WT18-3, red light

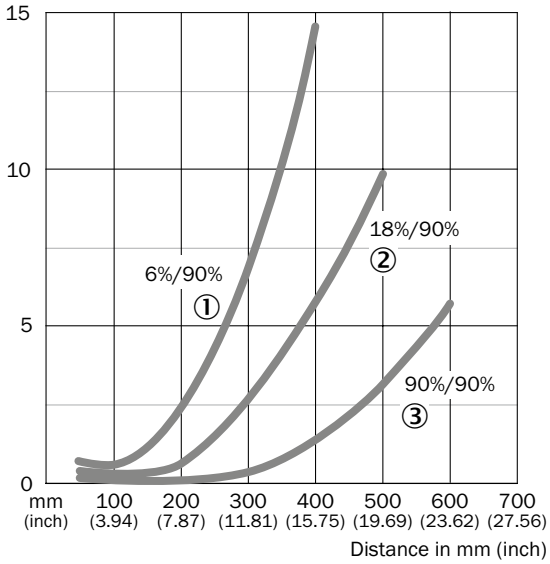

① Sensing range on black, 6 % remission
② Sensing range on gray, 18 % remission
③ Sensing range on white, 90 % remission

WT18-3, infrared, 700 mm

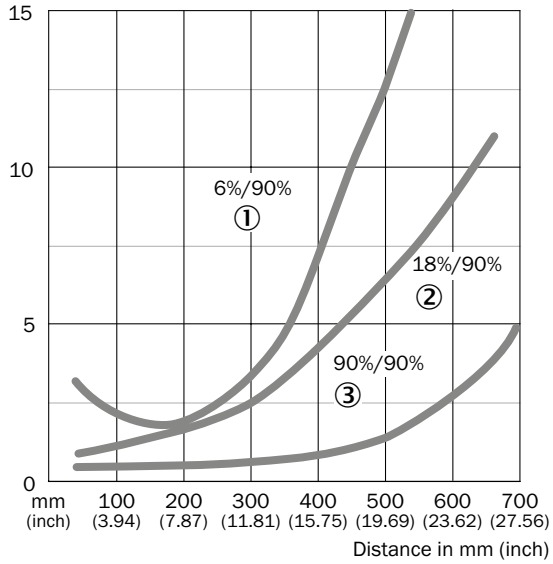

① Sensing range on black, 6 % remission
② Sensing range on gray, 18 % remission
③ Sensing range on white, 90 % remission

WT18-3 (Ex), infraret, 1,000 mm

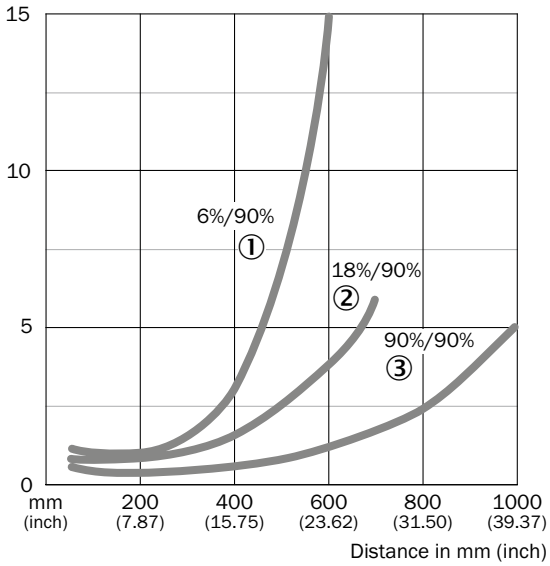

① Sensing range on black, 6 % remission
② Sensing range on gray, 18 % remission
③ Sensing range on white, 90 % remission

G

Operating reserve

WL18-3, WL18-3 Ex

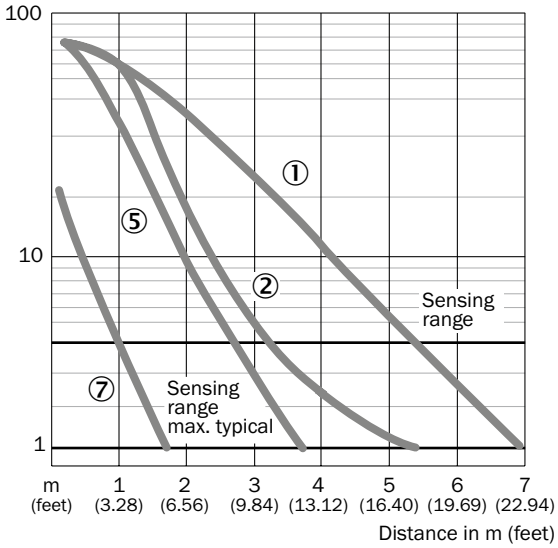

WS/WE18-3

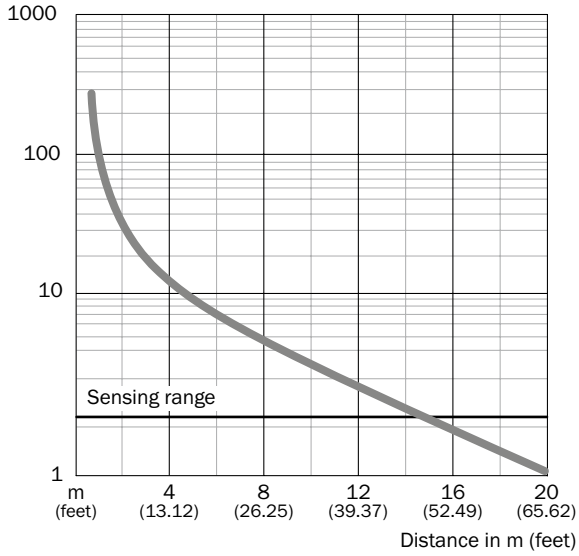

① PL80A
② C110A
⑤ PL30A
⑦ Reflective tape Diamond Grade

Bar diagrams

WT18-3, red light

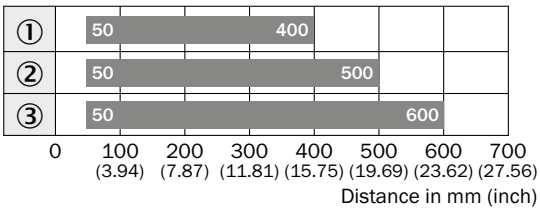

Sensing range

① Sensing range on black, 6 % remission
② Sensing range on gray, 18 % remission
③ Sensing range on white, 90 % remission

WT18-3, infrared, 700 mm

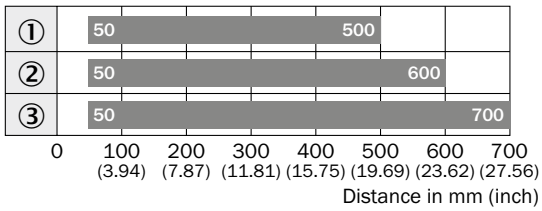

Sensing range

① Sensing range on black, 6 % remission
② Sensing range on gray, 18 % remission
③ Sensing range on white, 90 % remission

G

WT18-3 (Ex), infrared, 1,000 mm

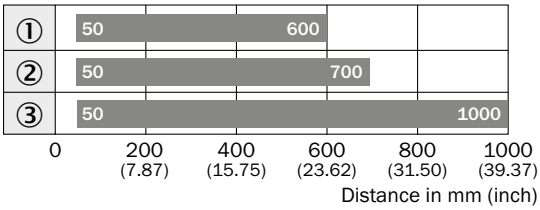

Sensing range

① Sensing range on black, 6 % remission
② Sensing range on gray, 18 % remission
③ Sensing range on white, 90 % remission

WL18-3, WL18-3 Ex

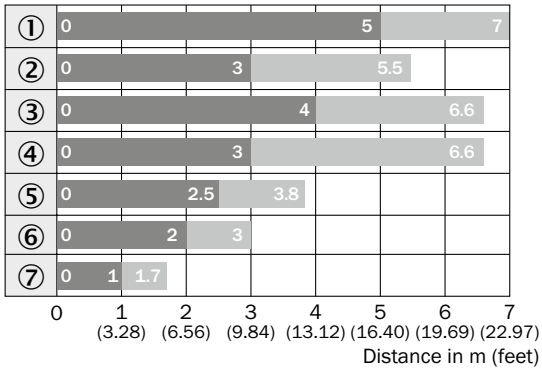

Sensing range Sensing range max.

① PL80A
② C110A
③ PL50A
④ PL40A
⑤ PL30A
⑥ PL20A
⑦ Reflective tape Diamond Grade

WS/WE18-3

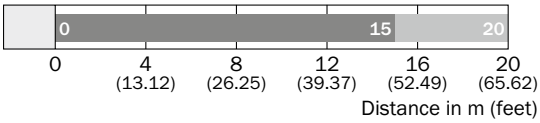

Sensing range Sensing range typ. max.

G

Connection diagram

Cd-072

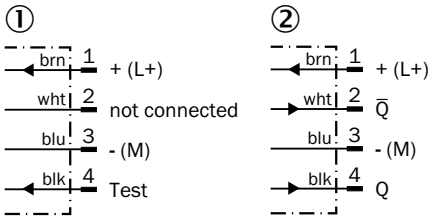

① Sender
② Receiver

Cd-074

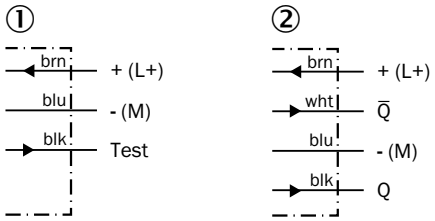

① Sender
② Receiver

Cd-075

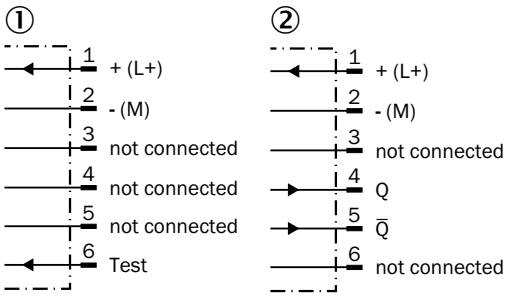

① Sender
② Receiver

Cd-083

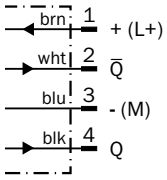

Cd-094

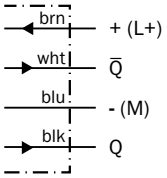

Cd-102

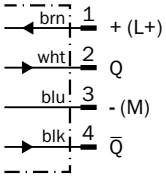

Cd-141

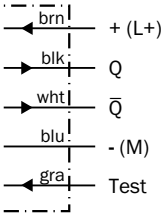

Cd-178

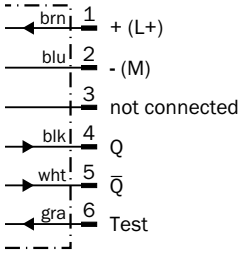

G

Recommended accessories

Mounting brackets/plates

Mounting brackets

Figure	Material	Description	Model name	Part no.
	Steel, zinc coated	Mounting bracket	BEF-WN-W14	2019084
		Mounting bracket with hinged arm	BEF-WN-W18	2009317

Plug connectors and cables

Connecting cable (female connector-open)

- **Cable material:** PVC
- **Connector material:** TPU

Figure	Connection type head A	Connection type head B	Connecting cable	Enclosure rating	Model name	Part no.
	Female connector, M12, 4-pin, straight	Cable, open conductor heads	2 m, 4-wire	IP 67	DOL-1204-G02M	6009382
			5 m, 4-wire	IP 67	DOL-1204-G05M	6009866
	Female connector, M12, 4-pin, angled	Cable, open conductor heads	2 m, 4-wire	IP 67	DOL-1204-W02M	6009383
			5 m, 4-wire	IP 67	DOL-1204-W05M	6009867

G

Universal bar clamp systems

Figure	Material	Description	Model name	Part no.
	Zinc diecast	Universal bar clamp for mounting bars with 12 mm diameter	BEF-KHS-KH3	5322626
	Zinc plated steel (sheet), Diecast zinc (clamp)	Plate N03 for universal clamp bracket	BEF-KHS-N03	2051609
		Plate N04 for universal clamp bracket	BEF-KHS-N04	2051610

Device protection (mechanical)

Protective housing/tubes

Figure	Material	Description	Model name	Part no.
	Zinc plated steel (protective housing), Diecast zinc (clamp)	Protective housing for universal clamp	BEF-SG-W14	2058124
			BEF-SG-W27	2039601

Reflectors

Angular

Figure	Material	Description	Model name	Part no.
	PMMA/ABS	Rectangular, screw connection, 47 mm x 47 mm	P250	5304812
		Rectangular, screw connection, 38 mm x 15 mm	PL20A	1012719
		Rectangular, screw connection, 56 mm x 28 mm	PL30A	1002314
		Rectangular, screw connection, 37 mm x 56 mm	PL40A	1012720
		Rectangular, screw connection, 80 mm x 80 mm	PL80A	1003865

Reflective tape

Figure	Description	Model name	Part no.
	Self-adhesive, 50 mm x 60 mm	REF-IRF-56	5314244

Round

Figure	Material	Description	Model name	Part no.
	PMMA/ABS	Round, screw connection	C110A	5304549

→ **For additional accessories, please see page L-861**

G

Sturdiness is their strength: SICK's compact sensors

H

The harsh climate of a port, the high temperature of a steel mill, or a through-put-optimized logistics center: the challenge for sensors is precise and reliable functioning even under the least favorable conditions. This is achieved with the latest PinPoint LEDs, intelligent ASIC, µC and IO-Link technology together with rugged plastic or metal housings. An extensive range of specialized accessories ensures broader application options including even the most extreme cases.

Your benefits

- The large sensing range and high operating reserves ensure a high level of reliability during use
- Extremely resistant to vibrations and immune to ambient conditions
- Reliable operation in ambient light, with optical reflections, and when devices are mounted opposite one another
- Reduces setup costs, e.g., in case of format adjustment using an IO-Link sensor communication interface
- PinPoint technology can replace laser photoelectric proximity sensors in some applications, eliminating the need for laser safety measures, and the service life of the PinPoint LED is double that of conventional laser diodes

8015327/2014-02-08

Compact photoelectric sensors

H

Overview of compact photoelectric sensors

	Housing properties						Sensor properties							
	Material			Enclosure rating										
	Plastic	Metal	Explosion protection housing	IP 66	IP 67	IP 69K	Photoelectric proximity sensor	Energetic	Background suppres-sion	Photoelectric retro-reflective sensor	Standard optics	Through-beam photoelectric sensor	AC/DC	
W23														
W23-2	■				■		■	■	■	■	■			
W24														
W24-2		■			■	■	■		■	■	■	■	■	
W24-2 Ex	■		■		■		■		■	■	■			
W27														
W27-2 Laser	■				■		■		■					
W27-3	■			■	■	■	■		■	■	■	■	■	
W27-3 Ex	■		■		■		■		■	■	■	■		
W250														
W250-2	■				■		■		■	■	■	■	■	
W280														
W280-2	■			■	■		■	■		■	■	■	■	
W280L-2 Long Range NEW	■				■		■		■					
W2000	■				■		■	■		■	■	■	■	

H

	Optical properties					Special applications			Page
	Type of light/Light sender				Technology				
	LED infrared light	LED red light	Red laser light	PinPoint LED red light	SIRIC®	Detecting small objects	Detecting objects wrapped in film	Explosive areas	
	■	■		■	■		■		H-580
	■	■			■				H-590
	■	■			■			■	H-602
			■		■	■			H-610
	■	■		■	■		■		H-616
	■	■			■			■	H-632
		■							H-640
		■							H-654
			■			■			H-666
	■	■							H-672

H

Photoelectric proximity sensors

	Maximum sensing range	Dimensions (W x H x D)	Page
W27-2 Laser	100 mm ... 800 mm	24.6 mm x 80 mm x 53.5 mm	H-610
W250-2	100 mm ... 1,000 mm	20 mm x 65 mm x 43.9 mm	H-640
W27-3 Ex	30 mm ... 1,600 mm	31.4 mm x 112.3 mm x 70.4 mm	H-632
W280-2	10 mm ... 2,000 mm	23.5 mm x 74.5 mm x 63 mm	H-654
W27-3	30 mm ... 2,000 mm	24.6 mm x 80.6 mm x 54 mm	H-616
W24-2 Ex	40 mm ... 2,000 mm	27 mm x 87.5 mm x 65 mm	H-602
W23-2	50 mm ... 2,300 mm	24.6 mm x 80.6 mm x 54 mm	H-580
W24-2	100 mm ... 2,500 mm	27 mm x 87.5 mm x 65 mm	H-590
W2000	0 mm ... 3,500 mm	45 mm x 73.7 mm x 48.6 mm	H-672
W280L-2 Long Range	200 mm ... 18,000 mm	23.5 mm x 76 mm x 55.8 mm	H-666

Photoelectric retro-reflective sensors

	Maximum sensing range	Dimensions (W x H x D)	Page
W23-2	0.01 m ... 12 m	24.6 mm x 80.6 mm x 54 mm	H-580
W27-3 Ex	0.01 m ... 15 m	31.4 mm x 112.3 mm x 70.4 mm	H-632
W250-2	0.01 m ... 15 m	20 mm x 65 mm x 43.9 mm	H-640
W280-2	0.01 m ... 15 m	23.5 mm x 74.5 mm x 63 mm	H-654
W2000	0 m ... 15 m	45 mm x 73.7 mm x 48.6 mm	H-672
W27-3	0.1 m ... 19 m	24.6 mm x 80.6 mm x 54 mm	H-616
W24-2 Ex	0 m ... 22 m	27 mm x 87.5 mm x 65 mm	H-602
W24-2	0 m ... 22 m	27 mm x 87.5 mm x 65 mm	H-590

H

Through-beam photoelectric sensors

	Maximum sensing range	Dimensions (W x H x D)	Page
W27-3	0 m ... 35 m	24.6 mm x 80.6 mm x 54 mm	H-616
W27-3 Ex	0 m ... 35 m	31.4 mm x 112.3 mm x 70.4 mm	H-632
W250-2	0 m ... 50 m	20 mm x 65 mm x 43.9 mm	H-640
W2000	0 m ... 50 m	45 mm x 73.7 mm x 48.6 mm	H-672
W24-2	0 m ... 60 m	27 mm x 87.5 mm x 65 mm	H-590
W280-2	0 m ... 60 m	23.5 mm x 74.5 mm x 63 mm	H-654

H

Product family overview

	W23-2	W24-2	W24-2 Ex
			
	Simple, economical and reliable	Long-range sensor with a metal housing for harsh environments	W24-2 for use in Category 2G explosive environments (gas)
Tecnical data overview			
Dimensions (W x H x D)	24.6 mm x 80.6 mm x 54 mm	27 mm x 87,5 mm x 65 mm	27 mm x 87.5 mm x 65 mm
Sensing range max.			
Photoelectric proximity sensor	50 mm ... 2,300 mm	100 mm ... 2,500 mm	40 mm ... 2,000 mm
Photoelectric retro-reflective sensor	0.1 m ... 12 m	0 m ... 22 m	0 m ... 22 m
Through-beam photoelectric sensor	–	0 m ... 60 m	–
Supply voltage	DC	DC, AC/DC	–
Light source	LED/PinPoint LED	LED	LED
Type of light	Visible red light/Infrared light	Visible red light/Infrared light	Visible red light/Infrared light
Enclosure rating	IP 67	IP 67, IP 69K	IP 67
Housing material	Plastic	Metal	Metal
At a glance			
	• Energetic photoelectric sensor with easy teach-in • Photoelectric proximity sensors with background suppression • Intense red emitting LED with consistent light spot on PinPoint models • Retro-reflective versions provided with and without adjustment • Teach-in pushbutton on energetic proximity versions for quick, repeatable commissioning • Cable or M12 connection	• IP 69K-tested die-cast zinc housing • Terminal chamber protected by the housing • Immune to ambient light and crosstalk • Selectable PNP/NPN, light/dark output • Variants with DC voltage and universal AC/DC voltage with UL approval • Optional test input, time delays, alarm output and front screen heating also available in high-power version. • M12 or terminal chamber connection: both 90° rotatable	• Classification: EX II 2G Ex ia op is IIC T4 according to Directive 94/9/EC (ATEX) • Corresponds to Category 2G • Output type: EN 60947-5-6 (NAMUR) • M12 or terminal chamber connection: 90° rotatable • Durable metal housing • Precise background suppression
Detailed information	➜ H-580	➜ H-590	➜ H-602

H

			
	W27-2 Laser	**W27-3**	**W27-3 Ex**
	Photoelectric proximity sensor with a small laser light spot and a large sensing range	Precise, durable and powerful solution for a wide range of applications	Ready-to-install sensors compliant with ATEX category 3G/3D
	24.6 mm x 80 mm x 53.5 mm	24.6 mm x 80.6 mm x 54 mm	31.4 mm x 112.3 mm x 70.4 mm
	100 mm ... 800 mm	30 mm ... 2,000 mm	30 mm ... 1,600 mm
	–	0.1 m ... 19 m 0.1 m ... 3 m	0.1 m ... 15 m
	–	0 m ... 35 m	0 m ... 35 m
	DC	DC, AC/DC	–
	Laser	LED/PinPoint LED	LED
	Visible red light	Visible red light/Infrared light	Visible red light/Infrared light
	IP 67	IP 65, IP 66, IP 67, IP 69K	IP 67
	Plastic	Plastic	Plastic/Metal/Stainless steel
	• 2 mm diameter light spot at a distance of 400 mm • Precise adjustable background suppression • Visible red laser LED • Sensing range adjustment via potentiometer • UL approval	• Intense visible red emitter LED with consistent light spot for PinPoint versions • Long sensing ranges with IR LED achieve up to 2500 mm • Precise background suppression for detection of multi-colored objects • Universal DC or DC/AC supply voltage • Operating temperature: –40 °C – +60 °C	• Classification: EX II 3G EX nA op is IIB T4 Gc X, EX II 3D EX tc IIIB T135 °C Dc IP67 X according to Directive 94/9/EC (ATEX) • Corresponds to category 3D/3G • Conform to standards and ready-to-install: Sensor and additional protective housing (stainless steel 1.4301) • Long sensing range with IR LED • High level of operating reserve • Resistant to ambient light, optical reflections, and crosstalk from other photoelectric devices
	➜ H-610	➜ H-616	➜ H-632

H

Product family overview

		
	W250-2	**W280-2**
	High performance in a compact housing with universal AC/DC voltage	Sensor kit with mounting bracket and reflector
Tecnical data overview		
Dimensions (W x H x D)	20 mm x 65 mm x 43,9 mm 20 mm x 60 mm x 43,9 mm	23,5 mm x 74,5 mm x 63 mm
Sensing range max.		
Photoelectric proximity sensor	100 mm ... 1.000 mm	10 mm ... 2.000 mm
Photoelectric retro-reflective sensor	0,01 m ... 15 m	0,01 m ... 15 m
Through-beam photoelectric sensor	0 m ... 50 m	0 m ... 60 m
Supply voltage	DC, AC/DC	DC, AC
Light source	BrightLight-LED	BrightLight-LED
Type of light	Visible red light	Visible red light
Enclosure rating	IP 67	IP 66, IP 67
Housing material	Plastic	Plastic
At a glance		
	• Highly visible red light spot thanks to the Bright Light LED • Potentiometer for adjusting sening range • Operating mode (light/dark) selectable via control wire • Cable or rotatable M12 connector • Versions for 10 – 30 V DC or 24 – 240 V DC/ 24 – 240 V AC voltage supply in compact design • Stainless steel mounting bracket BEF-W250 included in delivery	• Highly visible red light spot thanks to the BrightLight LED • Potentiometer for adjusting sensing range • Light/dark switching (DC devices only) • Rotatable connector, cable connection or terminal chamber • Versions for 10 – 30 V DC or 24 – 240 V DC/AC voltage supply • AC/DC (-2Hxxxx) devices are compliant with EN61000-6-3 (electromagnetic interference for “residential, commercial and light-industrial environments”) • Stainless steel mounting bracket and P250 reflector (for WL280 only) are included in delivery
Detailed information	➜ H-640	➜ H-654

H

		
	W280L-2 Long Range	**W2000**
	Laser class 1 photoelectric proximity sensors – great performance, simple operation	Power, flexibility and reliability for long-range applications
	23,5 mm x 76 mm x 55,8 mm	45 mm x 73.7 mm x 48.6 mm
	200 mm ... 18.000 mm	0 m ... 3.5 m
	–	0 m ... 15 m
	–	0 m ... 50 m
	DC	DC / AC/DC
	Laser	LED
	Visible red light	Infrared light / visible red light
	IP 67	IP 67, NEMA 6
	Plastic	Plastic
	• WTT280L-2: sensing range up to 4 m • WLT280L-2: sensing range up to 18 m • Complete background suppression: very small black/white shift, insensitive against reflections from the background (e.g. shiny metal, window, safety vest) • Visible red class 1 laser light • Version 1: with 1 x switching output and light/dark switch, version 2: with 2 x switching outputs and light/dark switch • Disable laser by wire • Reliable detection also in very fast production processes thanks to the switching frequency of 1000 Hz	• Rugged, plastic housing • Crosstalk and ambient light immunity • Adjustable sensing range • Signal strength indicator • IP 67/NEMA 6 enclosure rating
	➜ H-666	➜ H-672

H

Simple, economical and reliable

SIRIC®
optical ASIC
invented by SICK

Product description

The W23-2 family is widely used due its economical price structure and ease of installation. Standard sensor types as proximity and retro-reflective are offered in their simplified versions. The W23-2 type has become one of the most widely used photoelectric sensors, particularly in handling and warehouse systems. Users appreciate its three key qualities – simplicity, tamper-proofing and reliability.

This family also offers special versions, including a retro-reflective variant for detection of plastic wrapped pallets. Laser and PinPoint background suppression variants for detection of small targets further enhance the product offering.

A wide range of accessories is available for mechanical and electrical integration in systems.

At a glance

- Energetic photoelectric sensor with easy teach-in
- Photoelectric proximity sensors with background suppression
- Intense red emitting LED with consistent light spot on PinPoint models
- Retro-reflective versions provided with and without adjustment
- Teach-in pushbutton on energetic proximity versions for quick, repeatable commissioning
- Cable or M12 connection

Your benefits

- Teach-in pushbutton option for quick commissioning
- Easy alignment with PinPoint LED and laser technology
- 360° LEDs provide device status indication from multiple angles

Additional information

→ **www.mysick.com/en/W23-2**
For more information, just enter the link or scan the QR code and get direct access to technical data, CAD design models, operating instructions, software, application examples and much more.

Detailed technical data

Features

	WT23-2	WTE23-2	WL23-2
Sensor principle	Photoelectric proximity sensor		Photoelectric retro-reflective sensor
Detection principle	Background suppression	Energetic	Standard optics
Dimensions (W x H x D)	24.6 mm x 80.6 mm x 54 mm		
Housing design (light emission)	Rectangular		
Sensing range max.	50 mm ... 1,000 mm [1] (depending on type)	50 mm ... 2,300 mm [1]	0.1 m ... 12 m [2] (depending on type)
Sensing range	100 mm ... 1,000 mm (depending on type)	30 mm ... 2,000 mm	0.3 m ... 9 m [2] (depending on type)
Type of light	Infrared light/visible red light (depending on type)	Infrared light	Visible red light
Light source	LED [3]		LED [3]/PinPoint LED [3] (depending on type)
Wave length			
Infrared light	880 nm		–
Visible red light	660 nm	–	660 nm
Adjustment	Potentiometer	Single teach-in button	–

[1] Object with 90 % reflectance (referred to standard white, DIN 5033)
[2] PL80A.
[3] Average service life of 100,000 h at T_A = +25 °C.

Mechanics/electronics

	WT23-2	WTE23-2	WL23-2
Supply voltage [1]	10 V DC ... 30 V DC		
Ripple [2]	≤ 5 V_{pp}		
Power consumption	≤ 35 mA [3]/≤ 30 mA [3] (depending on type)	≤ 35 mA [3]	
Output type	PNP/NPN (depending on type)		
Output function	Complementary		
Switching mode	Light/dark-switching		
Signal voltage PNP HIGH/LOW	Approx. V_S – 2.5 V / 0 V		
Signal voltage NPN HIGH/LOW	Approx. VS / < 2.5 V		
Output current $I_{max.}$	≤ 100 mA		
Response time	≤ 2.5 ms [4]		≤ 2.5 ms [4]/≤ 3.5 ms [4] (depending on type)
Switching frequency	200 Hz [5]		200 Hz [5]/± 150 Hz [5] (depending on type)
Connection type	Cable, 2 m [6] Male connector, M12 Cable with connector, M12, 270 mm [6] (depending on type)		
Circuit protection	A [7], C [8], D [9]		
Protection class [10]	II		
Weight			
Connector M12, 4-pin	100 g		
Cable with connector M12, 4-pin	120 g	–	120 g
Cable, 4-wire	–		180 g
Polarisation filter	–		✔

H

	WT23-2	WTE23-2	WL23-2
Housing material	ABS		
Optics material	PMMA		
Enclosure rating	IP 67		
Ambient operating temperature	–25 °C ... +60 °C		
Ambient storage temperature	–40 °C ... +70 °C		

[1] Limit values, operation in short-circuit protected network max. 8 A.
[2] May not exceed or fall short of V_S tolerances.
[3] Without load.
[4] Signal transit time with resistive load.
[5] With light/dark ratio 1:1.
[6] Do not bend below 0 °C.
[7] A = V_S connections reverse-polarity protected.
[8] C = interference suppression.
[9] D = outputs overcurrent and short-circuit protected.
[10] Reference voltage: 50 V DC.

Ordering information

Other models available at www.mysick.com/en/W23-2

WT23-2

- **Sensor principle:** photoelectric proximity sensor
- **Detection principle:** background suppression
- **Switching mode:** light/dark-switching
- **Adjustment:** potentiometer

Type of light	Light source	Sensing range max. [1]	Light spot size (distance)	Output type	Connection	Connection diagram	Type	Part no.
Infrared light	LED	50 mm ... 1,000 mm	Ø 50 mm (800 mm)	PNP	Connector M12, 4-pin	Cd-083	WT23-2P2421	1027778
						Cd-101	WT23-2K2421	1028068
				NPN	Connector M12, 4-pin	Cd-083	WT23-2N2421	1028073
Visible red light	LED	50 mm ... 800 mm	Ø 30 mm (800 mm)	PNP	Connector M12, 4-pin	Cd-083	WT23-2P2441	1027779
					Cable with connector M12, 4-pin, 270 mm, PVC	Cd-083	WT23-2P3441	1028066

[1] Object with 90 % reflectance (referred to standard white, DIN 5033)

H

WTE23-2

- **Sensor principle:** photoelectric proximity sensor
- **Detection principle:** energetic
- **Type of light:** visible red light
- **Switching mode:** light/dark-switching
- **Adjustment:** single teach-in button

Light source	Sensing range max. [1]	Light spot size (distance)	Output type	Connection	Connection diagram	Type	Part no.
LED	50 mm ... 2,300 mm	Ø 160 mm (2,000 mm)	PNP	Connector M12, 4-pin	Cd-083	WTE23-2P2412	1027781
			NPN	Connector M12, 4-pin	Cd-083	WTE23-2N2412	1027782

[1] Object with 90 % reflectance (referred to standard white, DIN 5033)

WL23-2

- **Sensor principle:** photoelectric retro-reflective sensor
- **Detection principle:** standard optics
- **Type of light:** visible red light
- **Switching mode:** light/dark-switching

Light source	Sensing range max. [1]	Light spot size (distance)	Output type	Connection	Connection diagram	Type	Part no.
LED	0.1 m ... 10 m	Ø 45 mm (2.7 m)	PNP	Cable, 4-wire, 2 m, PVC	Cd-094	WL23-2P1130	1027784
				Connector M12, 4-pin	Cd-083	WL23-2P2430	1027785
				Cable with connector M12, 4-pin, 270 mm, PVC	Cd-083	WL23-2P3430	1027786
			NPN	Connector M12, 4-pin	Cd-083	WL23-2N2430	1027787
PinPoint LED	0.1 m ... 12 m	Ø 45 mm (2.7 m)	PNP	Connector M12, 4-pin	Cd-083	WL23-2P2460	1044165

[1] PL80A.

WL23-2, detecting objects wrapped in film

- **Sensor principle:** photoelectric retro-reflective sensor
- **Detection principle:** standard optics
- **Type of light:** visible red light
- **Switching mode:** light/dark-switching

Light source	Sensing range max. [1]	Light spot size (distance)	Output type	Connection	Connection diagram	Type	Part no.
LED	0.1 m ... 4 m	Ø 45 mm (2.7 m)	PNP	Connector M12, 4-pin	Cd-083	WL23-2P2430S01	1041159

[1] PL80A.

Dimensional drawings

Dimensions in mm (inch)

WT23-2, potentiometer

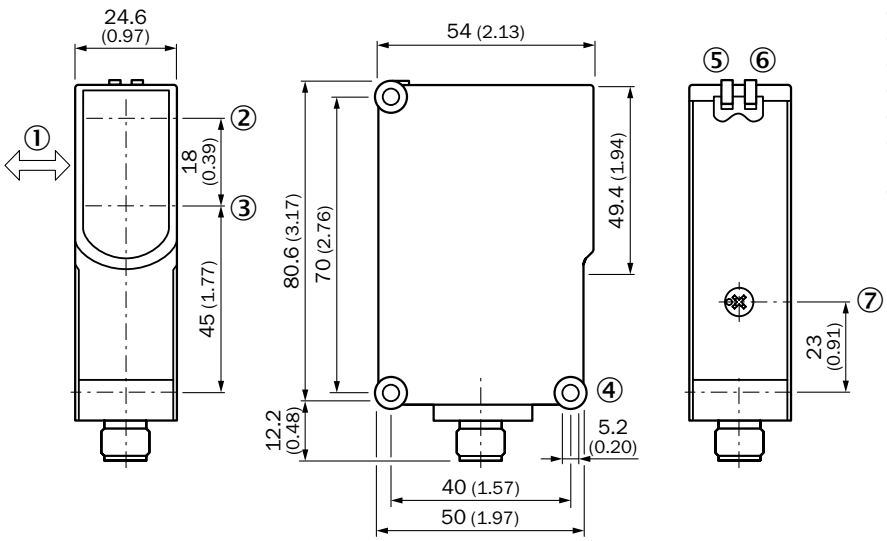

① Standard direction of the material being detected
② Optical axis, sender
③ Optical axis, receiver
④ Mounting hole ø 5.2 mm
⑤ Status indicator LED green: power on
⑥ Status indicator LED, yellow:
Status of received light beam
⑦ Sensing range adjustment: potentiometer

H

WTE23-2, single teach-in button

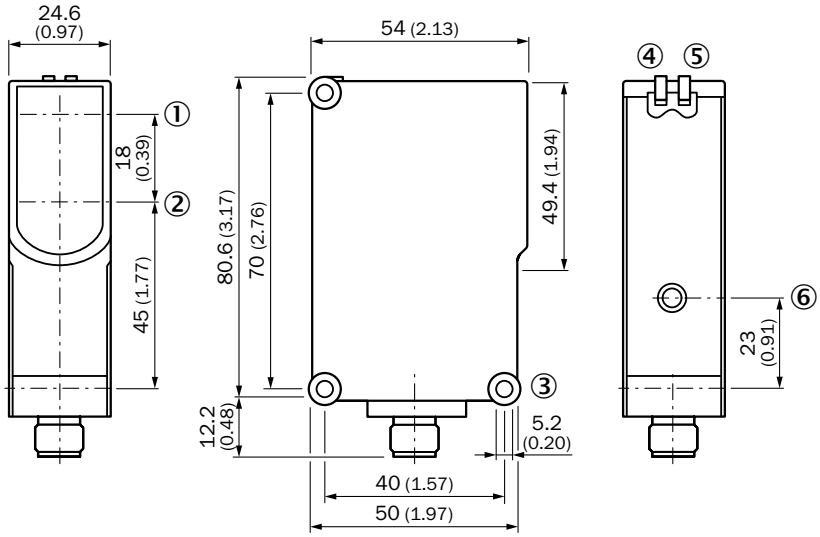

① Optical axis, sender
② Optical axis, receiver
③ Mounting hole ø 5.2 mm
④ Status indicator LED green: power on
⑤ Status indicator LED, yellow: Status of received light beam
⑥ Adjustment sensing range: single teach button

WL23-2

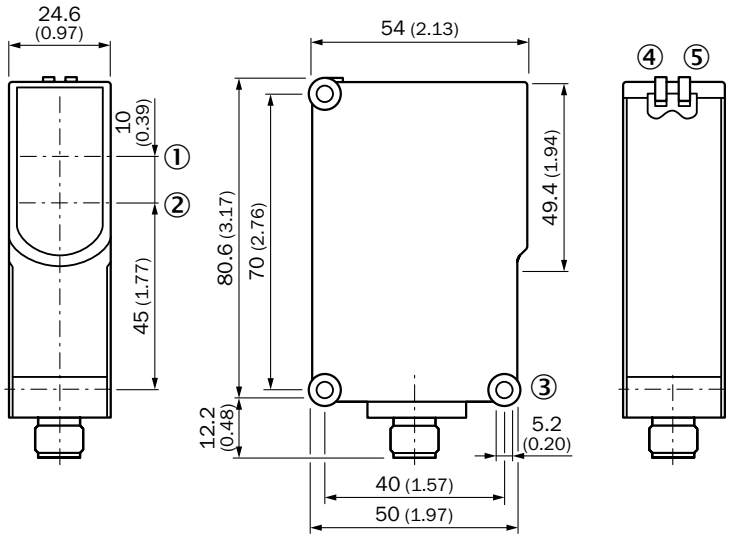

① Optical axis, sender
② Optical axis, receiver
③ Mounting hole ø 5.2 mm
④ Status indicator LED green: power on
⑤ Status indicator LED, yellow: Status of received light beam

H

Adjustments

Potentiometer

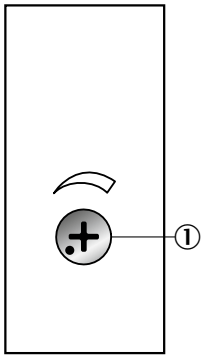

① Sensing range adjustment: potentiometer

Single teach-in button

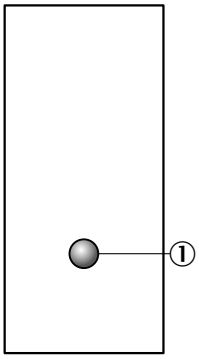

① Adjustment sensing range: single teach button

Characteristic curves

Black-white shift

WT23-2, infrared

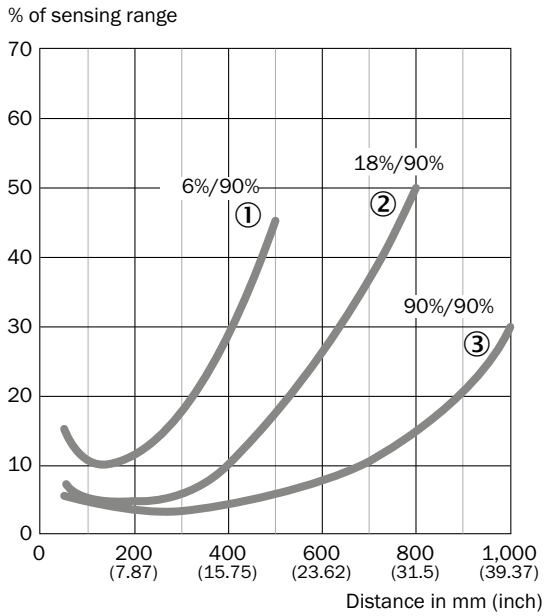

① Sensing range on black, 6 % remission
② Sensing range on gray, 18 % remission
③ Sensing range on white, 90 % remission

WT23-2, redlight

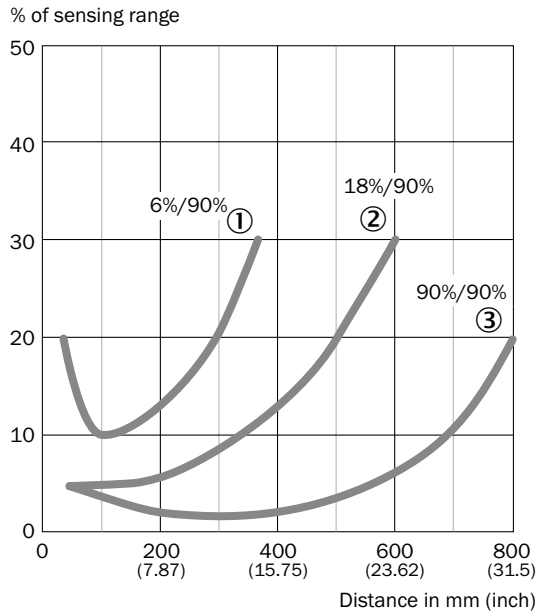

① Sensing range on black, 6 % remission
② Sensing range on gray, 18 % remission
③ Sensing range on white, 90 % remission

WT23-2, energetic

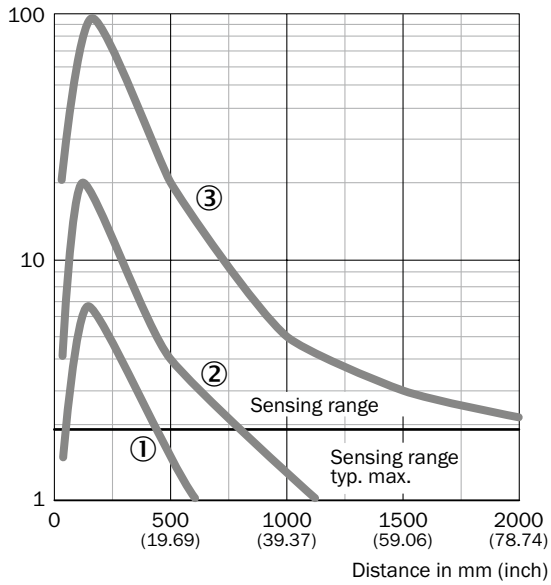

① Sensing range on black, 6 % remission
② Sensing range on gray, 18 % remission
③ Sensing range on white, 90 % remission

H

Operating reserve

WL23-2

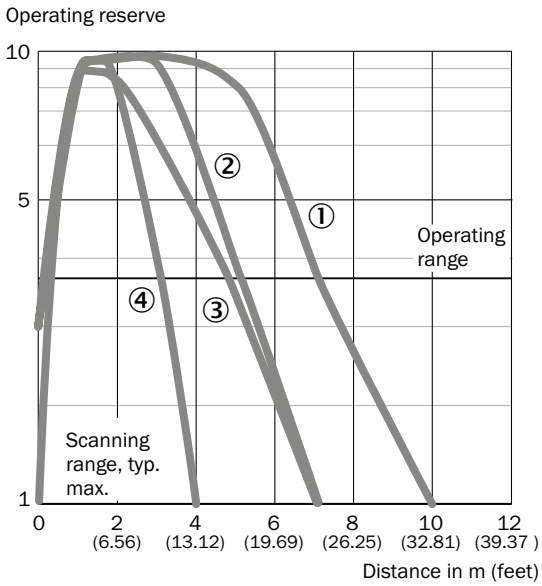

① PL80A
② PL40A
③ C110A
④ PL20A

WL23-2, PinPoint

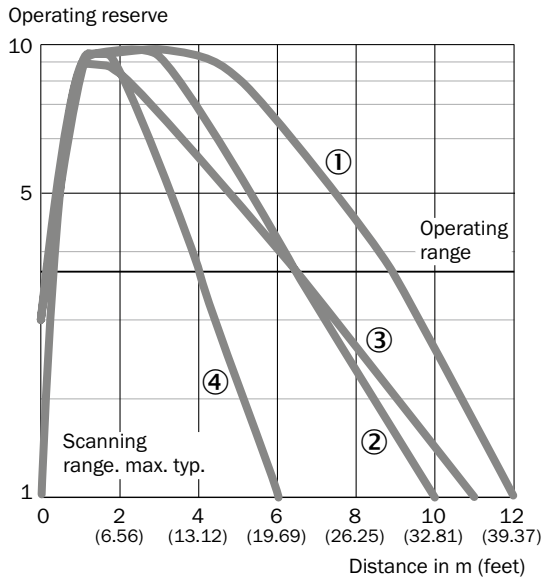

① PL80A
② PL40A
③ C110A
④ PL20A

Bar diagrams

WT23-2, infrared

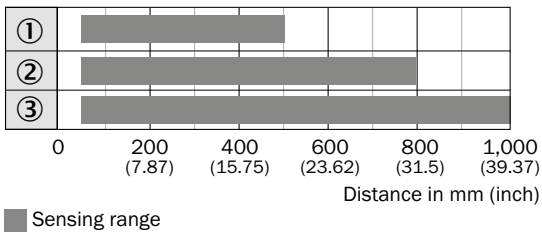

① Sensing range on black, 6 % remission
② Sensing range on gray, 18 % remission
③ Sensing range on white, 90 % remission

WT23-2, redlight

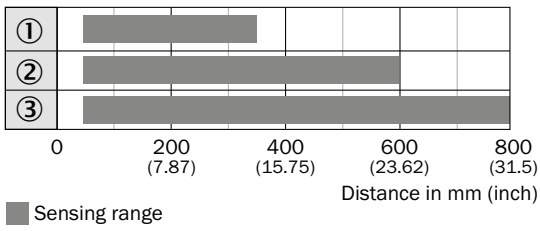

① Sensing range on black, 6 % remission
② Sensing range on gray, 18 % remission
③ Sensing range on white, 90 % remission

WT23-2, energetic

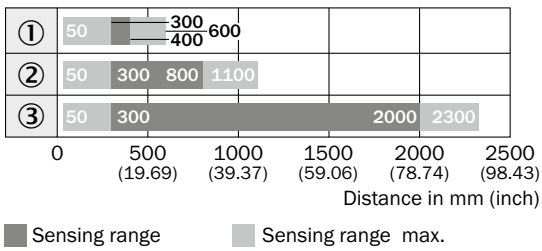

① Sensing range on black, 6 % remission
② Sensing range on gray, 18 % remission
③ Sensing range on white, 90 % remission

WL23-2

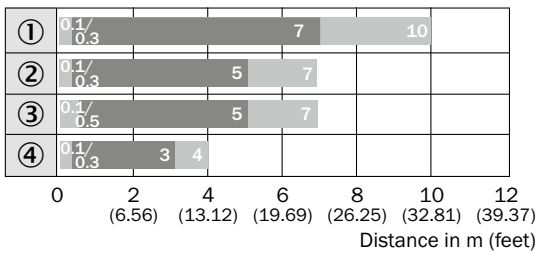

① PL80A
② PL40A
③ C110A
④ PL20A

WL23-2, PinPoint

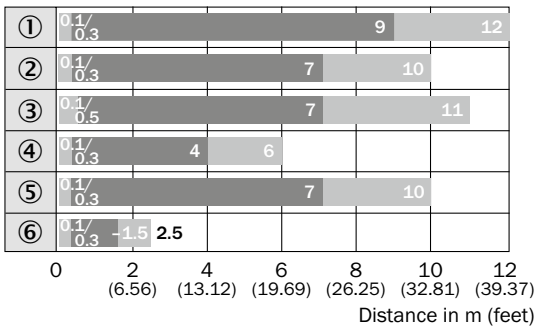

Sensing range Sensing range max.

① PL80A
② PL40A
③ C110A
④ PL20A
⑤ P250
⑥ Reflective tape Diamond Grade

Connection diagram

Cd-083

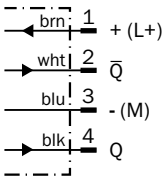

Cd-094

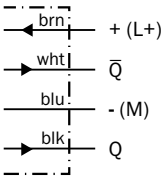

Cd-101

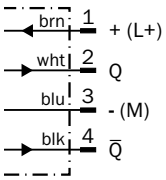

H

Recommended accessories

Mounting brackets/plates

Mounting brackets

Figure	Material	Description	Model name	Part no.
	Steel, zinc coated	Mounting bracket with hinged arm	BEF-WN-MULTI	2064469
		Mounting bracket	BEF-WN-W23	2019085
		Mounting bracket with hinged arm	BEF-WN-W27	2009122

Plug connectors and cables

Connecting cable (female connector-open)

- **Cable material:** PVC
- **Connector material:** TPU

Figure	Connection type head A	Connection type head B	Connecting cable	Enclosure rating	Model name	Part no.
	Female connector, M12, 4-pin, straight	Cable, open conductor heads	2 m, 4-wire	IP 67	DOL-1204-G02M	6009382
			5 m, 4-wire	IP 67	DOL-1204-G05M	6009866
	Female connector, M12, 4-pin, angled	Cable, open conductor heads	2 m, 4-wire	IP 67	DOL-1204-W02M	6009383
			5 m, 4-wire	IP 67	DOL-1204-W05M	6009867

Universal bar clamp systems

Figure	Material	Description	Model name	Part no.
	Zinc plated steel (sheet), Diecast zinc (clamp)	Plate N04 for universal clamp bracket	BEF-KHS-N04	2051610

H

Device protection (mechanical)

Protective housing/tubes

Figure	Material	Description	Model name	Part no.
	Zinc plated steel (protective housing), Diecast zinc (clamp)	Protective housing for universal clamp	BEF-SG-W27	2039601
	Steel, zinc coated	Weather hood for universal clamp bracket	OBW-KHS-M01	2023240

Reflectors

Angular

Figure	Material	Description	Model name	Part no.
	PMMA/ABS	Rectangular, screw connection, 47 mm x 47 mm	P250	5304812
		Rectangular, screw connection, 38 mm x 15 mm	PL20A	1012719
		Rectangular, screw connection, 56 mm x 28 mm	PL30A	1002314
		Rectangular, screw connection, 37 mm x 56 mm	PL40A	1012720
		Rectangular, screw connection, 80 mm x 80 mm	PL80A	1003865

Reflective tape

Figure	Description	Model name	Part no.
	Self-adhesive, 50 mm x 60 mm	REF-IRF-56	5314244

Round

Figure	Material	Description	Model name	Part no.
	PMMA/ABS	Round, screw connection	C110A	5304549

→ **For additional accessories, please see page L-861**

H

Long-range sensor with a metal housing for harsh environments

IP 69K | AC/DC | SIRIC®

Product description

The W24 features a rugged metal housing that has passed IP 69K testing, which ensures reliability in harsh industrial conditions. These sensors are highly resistant to ambient light and offer a very long sensing range with a high operating reserve. As a result, there are optional a standard front lens heating or a high-power front lens heating versions, similar to automotive rear window defrost, for use in environments with extreme temperatures fluctuation. An alarm output option enables early detection of contamination, reducing downtime that results from contamination interruptions. Variants with DC voltage and universal voltage DC/AC and multiple connectivity options provide additional flexibility within the W24 family.

The sensors are conform with the 2G category for explosive zones, which enhances their range of applications even further.

At a glance

- IP 69K-tested die-cast zinc housing
- Terminal chamber protected by the housing
- Immune to ambient light and crosstalk
- Selectable PNP/NPN, light/dark output
- Variants with DC voltage and universal AC/DC voltage with UL approval
- Optional test input, time delays, alarm output and front screen heating also available in high-power version.
- M12 or terminal chamber connection: both 90° rotatable

Your benefits

- Rugged metal housing that has passed IP 69K testing offers reliability and a long service life
- Immune to ambient light and crosstalk, which improves detection security
- Long-range retro-reflective and through-beam versions have a very high operating reserve, which ensures reliable operation even when if sensor is contaminated
- Ensuring reliable operation in environments with temperatures fluctuation due to standard or high-power front lens heating (prevention and reduction of condensation water on the front lens)
- Variants with DC voltage and universal AC/DC voltage provide installation flexibility

Additional information

→ **www.mysick.com/en/W24-2**

For more information, just enter the link or scan the QR code and get direct access to technical data, CAD design models, operating instructions, software, application examples and much more.

H

Detailed technical data

Features

	DC			AC/DC		
	WT24-2	WL24-2	WS/WE24-2	WT24-2	WL24-2	WS/WE24-2
Sensor principle	Photoelectric proximity sensor	Photoelectric retro-reflective sensor	Through-beam photoelectric sensor	Photoelectric proximity sensor	Photoelectric retro-reflective sensor	Through-beam photoelectric sensor
Detection principle	Background suppression	Standard optics	–	Background suppression	Standard optics	–
Dimensions (W x H x D)	27 mm x 87.5 mm x 65 mm					
Housing design (light emission)	Rectangular					
Sensing range max.	100 mm ... 2,500 mm [1] (depending on type)	0 m ... 22 m [2]	0 m ... 60 m	100 mm ... 2,500 mm [1] (depending on type)	0 m ... 22 m [2]	0 m ... 60 m
Sensing range	100 mm ... 2,500 mm [1] (depending on type)	0 m ... 15 m [2]	0 m ... 50 m	100 mm ... 2,500 mm [1] (depending on type)	0 m ... 15 m [2]	0 m ... 50 m
Type of light	Infrared light/ visible red light (depending on type)	Visible red light		Infrared light/ visible red light (depending on type)	Visible red light	
Light source [3]	LED					
Angle of dispersion	–		Approx. 1°	–		Approx. 1°
Adjustment	Potentiometer					
Time type	Switch on delay/time delay off					
Delay time	Adjustable via time delay selector switch: 0.5 s ... 10 s					
Alarm output	–/✔ (depending on type)					

[1] Object with 90 % reflectance (referred to standard white, DIN 5033)
[2] PL80A.
[3] Average service life of 100,000 h at T_A = +25 °C.

Mechanics/electronics

	DC			AC/DC		
	WT24-2	WL24-2	WS/WE24-2	WT24-2	WL24-2	WS/WE24-2
Supply voltage	10 V DC ... 30 V DC			12 V DC ... 240 V DC [1]/24 V AC ... 240 V AC [2]		
Ripple [3]	< 5 V_{pp}			–		
Current consumption	≤ 50 mA [4]		–	–		
With dynamic front lense heating	≤ 150 mA [4]					
Current consumption, sender	–		50 mA [4]	–		
With dynamic front lense heating	–		150 mA [4]	–		
Current consumption, receiver	–		40 mA [4]	–		
With dynamic front lense heating	–		140 mA [4]	–		
Power consumption	–			< 2 VA		
Output type	PNP/NPN (selectable via NPN/PNP selector)			Relay, electrically isolated [5]		
Output function	–			Change-over contacts		
Switching mode	Light/dark-switching (selectable via light/dark rotary switch)			Light/dark-switching [5] (selectable via light/dark rotary switch)		
Output current $I_{max.}$	≤ 100 mA	–	≤ 100 mA	100 mA	–	
Switching current (switching voltage)	–			4 A (250 V AC)/4 A (24 V DC)		
Response time	≤ 500 µs [6]			≤ 10 ms		
Switching frequency [7]	1,000 Hz			10 Hz		

H

	DC			AC/DC		
	WT24-2	WL24-2	WS/WE24-2	WT24-2	WL24-2	WS/WE24-2
Angle of reception	–		Approx. 2.5°	–		Approx. 2.5°
Connection type	Male connector, M12 [8]/Terminals with gland [8] (depending on type)			Terminals with gland [8]		
Circuit protection	A [9], C [10], D [11]			A [9], C [10]		
Protection class	II [12]			II [13]		
Weight	330 g		660 g	330 g		660 g
Polarisation filter	–	✔	–	–	✔	–
Front screen heating	–/✔ (depending on type)					
Housing material	Zinc diecast					
Optics material	PMMA, glass (depending on type)			PMMA		
Enclosure rating	IP 69K/IP 67 (depending on type)			IP 69K		
Usage category	–			AC-15, DC-13, according to EN 60947-1		
Test input sender off	TE to 0 V			–		
Ambient operating temperature	–40 °C ... +60 °C					
Ambient storage temperature	–40 °C ... +75 °C					

[1] Limit values, operation in short-circuit protected network max. 8 A.
[2] +- 10 %.
[3] May not exceed or fall short of V_S tolerances.
[4] Without load.
[5] Provide suitable spark suppression for inductive or capacitive loads.
[6] Signal transit time with resistive load.
[7] With light/dark ratio 1:1.
[8] Connection rotable by 90°.
[9] A = V_S connections reverse-polarity protected.
[10] C = interference suppression.
[11] D = outputs overcurrent and short-circuit protected.
[12] Reference voltage: 50 V DC.
[13] Rated voltage: 250 V AC/DC.

Ordering information

Other models available at www.mysick.com/en/W24-2

WT24-2, DC

- **Sensor principle:** photoelectric proximity sensor
- **Detection principle:** background suppression
- **Light source:** LED
- **Output type:** NPN, PNP
- **Switching mode:** light/dark-switching
- **Adjustment:** potentiometer

H

Type of light	Sensing range max. [1]	Light spot size (distance)	Connection	Alarm output	Front screen heating	Time functions	Connection diagram	Type	Part no.
Infrared light	100 mm ... 2,500 mm	Ø 80 mm (2,500 mm)	Connector M12, 4-pin	–	–	–	Cd-117	WT24-2B410	1016933
					✔ [2]	✔	Cd-117	WT24-2B420	1017885
			Connector M12, 5-pin	✔	–	–	Cd-150	WT24-2V510	1017855
			Terminal connection with M16 gland	–	–	–	Cd-120	WT24-2B210	1016931
					✔	✔	Cd-120	WT24-2B220	1017882
				✔	✔ [2]	✔	Cd-121	WT24-2V220	1017886
Visible red light	100 mm ... 1,200 mm	Ø 40 mm (1,200 mm)	Connector M12, 4-pin	–	–	–	Cd-117	WT24-2B440	1016934
			Connector M12, 5-pin	✔	–	–	Cd-150	WT24-2V540	1017888
					✔ [3]	✔	Cd-150	WT24-2V550S12	1019468
			Terminal connection with M16 gland	–	–	–	Cd-120	WT24-2B240	1017813
					✔	✔	Cd-120	WT24-2B250	1017883
				✔	✔ [2]	✔	Cd-121	WT24-2V250	1017887

[1] Object with 90 % reflectance (referred to standard white, DIN 5033)
[2] Static, low heat output, use in +5° C ... +15° C.
[3] Dynamic, high heat output, application for quickly changing temperatures between –5° C ... +10° C, Front screen material: Glass.

WL24-2, DC

- **Sensor principle:** photoelectric retro-reflective sensor
- **Detection principle:** standard optics
- **Light source:** LED
- **Output type:** NPN, PNP
- **Switching mode:** light/dark-switching
- **Adjustment:** potentiometer

Type of light	Sensing range max. [1]	Light spot size (distance)	Connection	Alarm output	Front screen heating	Time functions	Connection diagram	Type	Part no.
Visible red light	0 m ... 22 m	Ø 250 mm (15 mm)	Connector M12, 4-pin	–	–	–	Cd-117	WL24-2B430	1017860
					✔ [2]	✔	Cd-117	WL24-2B440	1017879
			Connector M12, 5-pin	✔	–	–	Cd-150	WL24-2V530	1017881
					✔ [2]	✔	Cd-150	WL24-2V540	1018025
					✔ [3]	–	Cd-150	WL24-2V530S04	1023550
			Terminal connection with M16 gland	–	–	–	Cd-120	WL24-2B230	1015852
					✔ [2]	✔	Cd-120	WL24-2B240	1017859
				✔	–	–	Cd-121	WL24-2V230	1017880
					✔ [2]	✔	Cd-121	WL24-2V240	1018024

[1] PL80A.
[2] Static, low heat output, use in +5° C ... +15° C.
[3] Dynamic, high heat output, application for quickly changing temperatures between –5° C ... +10° C, Front screen material: Glass.

WS/WE24-2, DC

- **Sensor principle:** through-beam photoelectric sensor
- **Light source:** LED
- **Output type:** NPN, PNP
- **Switching mode:** light/dark-switching
- **Adjustment:** potentiometer

Type of light	Sensing range max. [1]	Light spot size (distance)	Connection	Alarm output	Front screen heating	Time functions	Connection diagram	Type	Part no.
Visible red light	0 m ... 60 m	Ø 700 mm (50 mm)	Connector M12, 4-pin	–	–	✔	Cd-118	WS/WE24-2B430	1017853
					✔ [1]	✔	Cd-118	WS/WE24-2B440	1017875
			Connector M12, 5-pin	✔	–	–	Cd-119	WS/WE24-2V530	1017877
					✔ [2]	–	Cd-119	WS/WE24-2V530S01	1023549
			Terminal connection with M16 gland	–	–	✔	Cd-097	WS/WE24-2B230	1017861
				✔	–	–	Cd-097	WS/WE24-2V230	1017876
				–	✔ [1]	✔	Cd-097	WS/WE24-2B240	1017862

[1] Static, low heat output, use in +5° C ... +15° C.
[2] Dynamic, high heat output, application for quickly changing temperatures between –5° C ... +10° C, Front screen material: Glass.

WT24-2, AC/DC

- **Sensor principle:** photoelectric proximity sensor
- **Detection principle:** background suppression
- **Light source:** LED
- **Output type:** relay
- **Switching mode:** light/dark-switching (Provide suitable spark suppression for inductive or capacitive loads.)
- **Adjustment:** potentiometer

Type of light	Sensing range max. [1]	Light spot size (distance)	Connection	Front screen heating	Time functions	Connection diagram	Type	Part no.
Infrared light	100 mm ... 2,500 mm	Ø 80 mm (2,500 mm)	Terminal connection with M16 gland	–	–	Cd-167	WT24-2R210	1016932
				✔ [2]	✔	Cd-167	WT24-2R220	1016854
Visible red light	100 mm ... 1,200 mm	Ø 40 mm (1,200 mm)	Terminal connection with M16 gland	–	–	Cd-167	WT24-2R240	1017854
				✔ [2]	✔	Cd-167	WT24-2R250	1016820

[1] Object with 90 % reflectance (referred to standard white, DIN 5033)

[2] Static, low heat output, use in +5° C ... +15° C.

WL24-2, AC/DC

- **Sensor principle:** photoelectric retro-reflective sensor
- **Detection principle:** standard optics
- **Light source:** LED
- **Output type:** relay
- **Switching mode:** light/dark-switching (Provide suitable spark suppression for inductive or capacitive loads.)
- **Adjustment:** potentiometer

Type of light	Sensing range max. [1]	Light spot size (distance)	Connection	Front screen heating	Time functions	Connection diagram	Type	Part no.
Visible red light	0 m ... 22 m	Ø 250 mm (15 mm)	Terminal connection with M16 gland	–	–	Cd-167	WL24-2R230	1017857
				✔ [2]	✔	Cd-167	WL24-2R240	1017858

[1] PL80A.

[2] Static, low heat output, use in +5° C ... +15° C.

H

WS/WE24-2, AC/DC

- **Sensor principle:** through-beam photoelectric sensor
- **Light source:** LED
- **Output type:** relay
- **Switching mode:** light/dark-switching (Provide suitable spark suppression for inductive or capacitive loads.)
- **Adjustment:** potentiometer

Type of light	Sensing range max.	Light spot size (distance)	Connection	Front screen heating	Time functions	Connection diagram	Type	Part no.
Visible red light	0 m ... 60 m	Ø 700 mm (50 mm)	Terminal connection with M16 gland	–	–	Cd-127	WS/WE24-2R230	1017863
				✔ [1]	✔	Cd-127	WS/WE24-2R240	1017864

[1] Static, low heat output, use in +5° C ... +15° C.

Dimensional drawings

Dimensions in mm (inch)

WT24-2

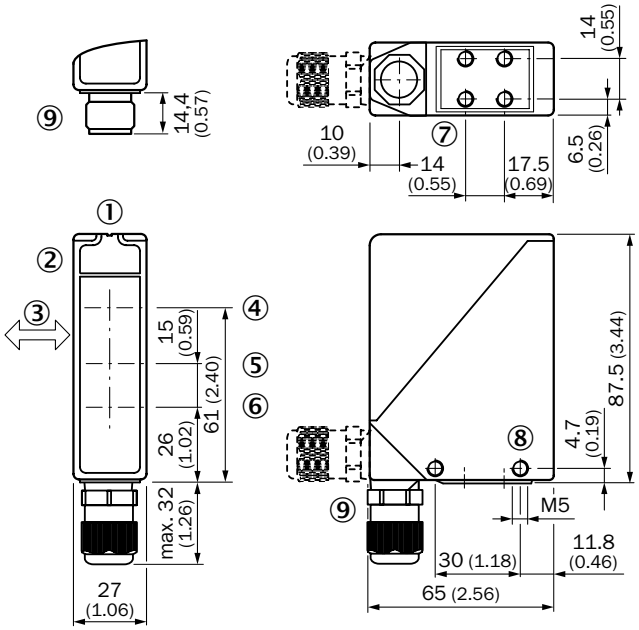

① Alignment sight
② LED signal strength indicator
③ Standard direction of the material being detected
④ Center of optical axis, sender
⑤ Centre of optical axis, receiver (close range)
⑥ Centre of optical axis, receiver (far range)
⑦ M5 threaded mounting hole, 6 mm deep
⑧ M5 threaded mounting hole, through-hole
⑨ M16 screw fixing and plug rotatable by 90°

WL24-2

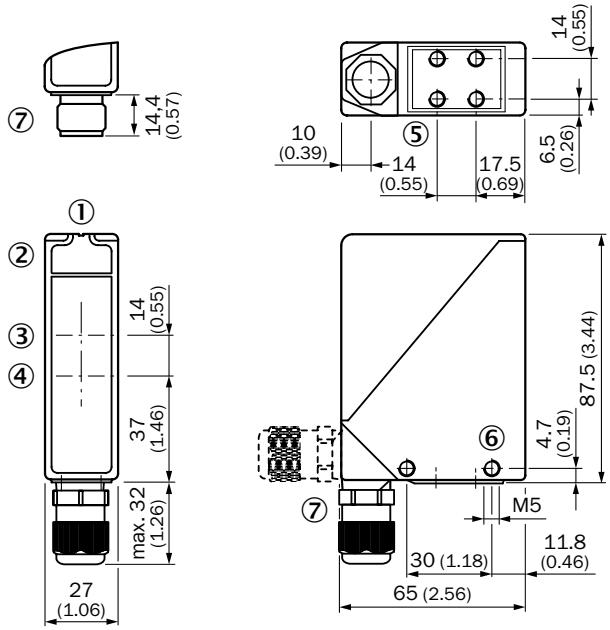

① Alignment sight
② LED signal strength indicator
③ Center of optical axis, sender
④ Center of optical axis, receiver
⑤ M5 threaded mounting hole, 6 mm deep
⑥ M5 threaded mounting hole, through-hole
⑦ M16 screw fixing and plug rotatable by 90°

WS/WE24-2

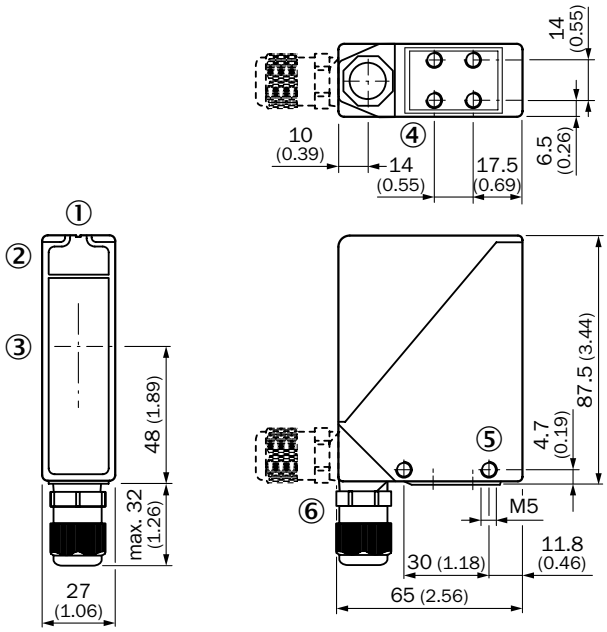

① Alignment sight
② LED signal strength indicator
③ Center of optical axis
④ M5 threaded mounting hole, 6 mm deep
⑤ M5 threaded mounting hole, through-hole
⑥ M16 screw fixing and plug rotatable by 90°

H

Adjustments

WT24-2, WL24-2, WS/WE24-2, DC

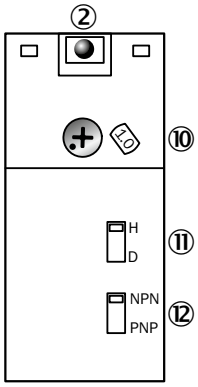

② LED signal strength indicator
⑩ Adjustment sensing range (WT) / sensitivity (WL, WS/WE)
⑪ Light/dark selector
⑫ NPN/ PNP selector

WT24-2, WL24-2, WS/WE24-2, AC/DC

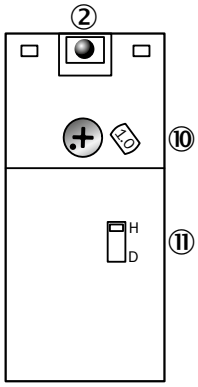

② LED signal strength indicator
⑩ Adjustment sensing range (WT) / sensitivity (WL, WS/WE)
⑪ Light/dark selector

WT24-2, WL24-2, WS/WE24-2, AC/DC, with time functions

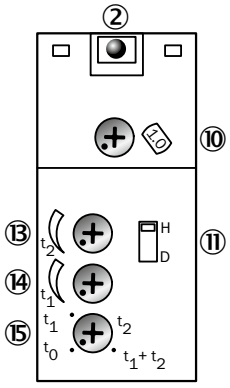

② LED signal strength indicator
⑩ Adjustment sensing range (WT) / sensitivity (WL, WS/WE)
⑪ Light/dark selector
⑫ Time control t_2=OFF-delay
⑬ Time control t_1=ON-delay
⑭ Time delay selector switch

WT24-2, WL24-2, WS/WE24-2, DC, with time functions

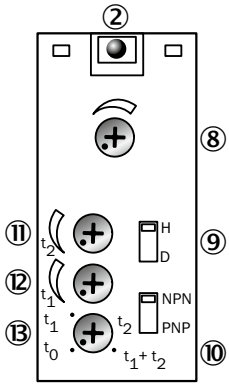

② LED signal strength indicator
⑧ Sensitivity adjustment
⑨ Light/dark selector
⑩ NPN/ PNP selector
⑪ Time control t_2=OFF-delay
⑫ Time control t_1=ON-delay
⑬ Time delay selector switch

Characteristic curves

Black-white shift

WT24-2, infrared light

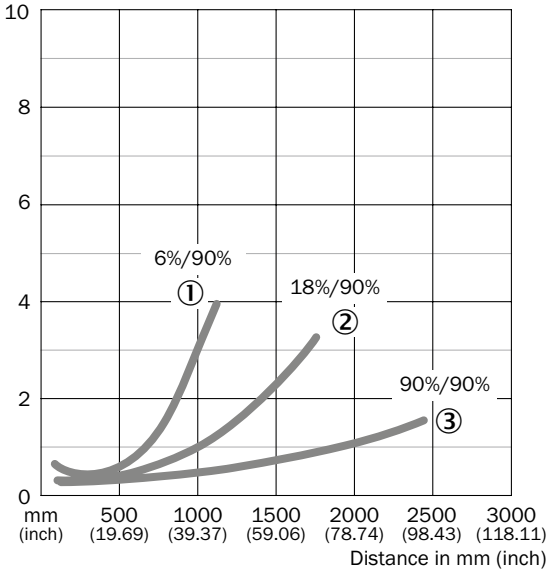

① Sensing range on black, 6 % remission
② Sensing range on gray, 18 % remission
③ Sensing range on white, 90 % remission

WT24-2, red light

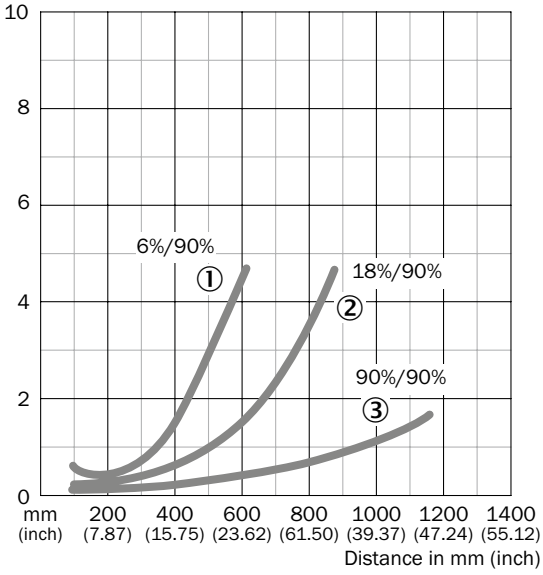

① Sensing range on black, 6 % remission
② Sensing range on gray, 18 % remission
③ Sensing range on white, 90 % remission

H

Operating reserve

WL24-2

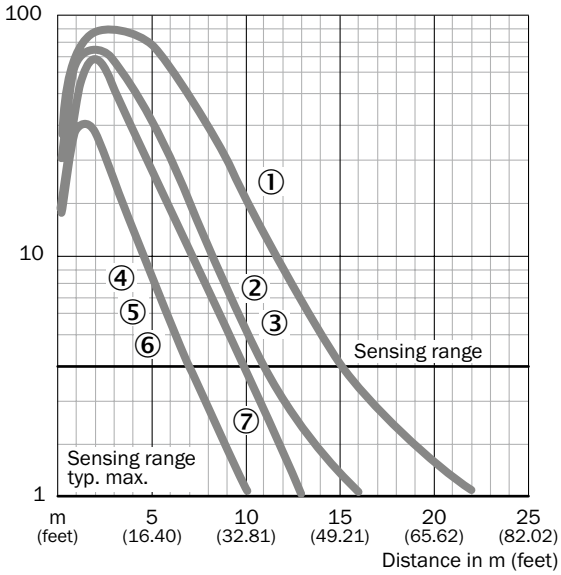

WS/WE24-2

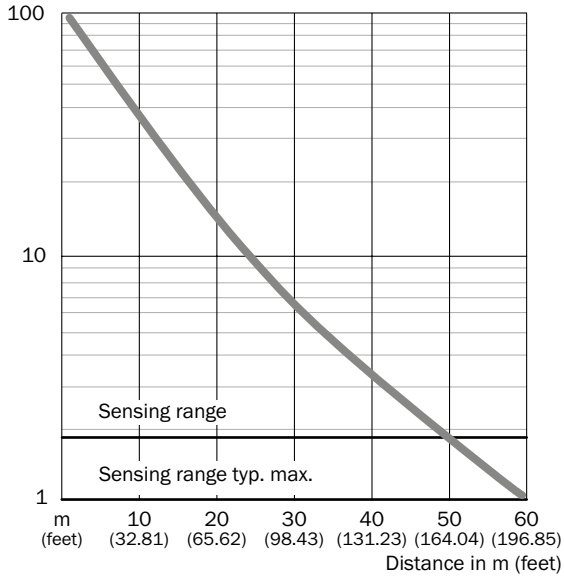

① PL80A
② PL50A
③ PL40A
④ PL30A
⑤ PL20A
⑥ Reflective tape Diamond Grade
⑦ C110A

Bar diagrams

WT24-2, infrared light

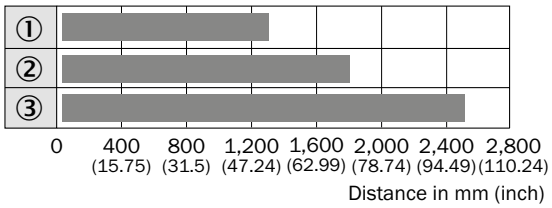

Sensing range

① Sensing range on black, 6 % remission
② Sensing range on gray, 18 % remission
③ Sensing range on white, 90 % remission

WT24-2, red light

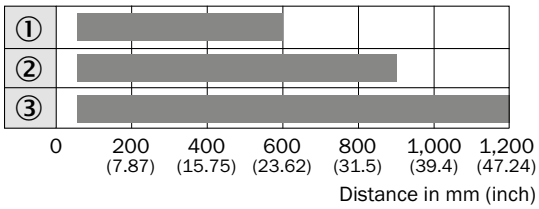

Sensing range

① Sensing range on black, 6 % remission
② Sensing range on gray, 18 % remission
③ Sensing range on white, 90 % remission

H

WL24-2

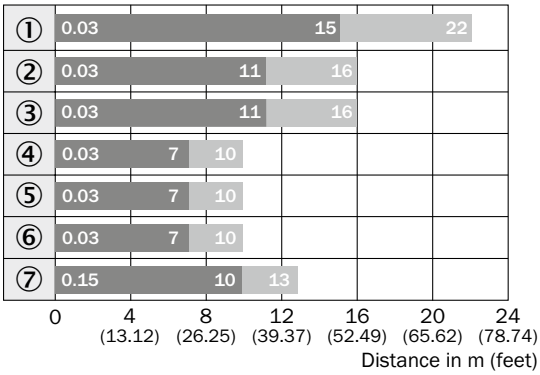

Sensing range Sensing range max.

① PL80A
② PL50A
③ PL40A
④ PL30A
⑤ PL20A
⑥ Reflective tape Diamond Grade
⑦ C110A

WS/WE24-2

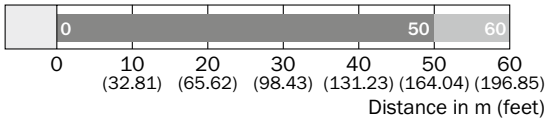

Sensing range Sensing range max.

Connection diagram

Cd-097

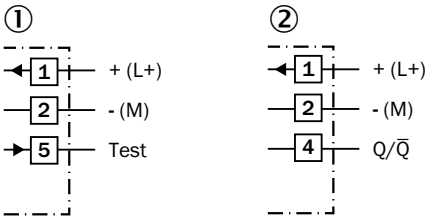

① Sender
② Receiver

Cd-117

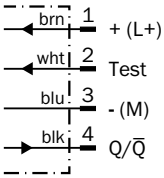

Cd-118

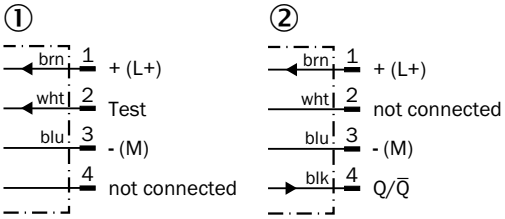

① Sender
② Receiver

Cd-119

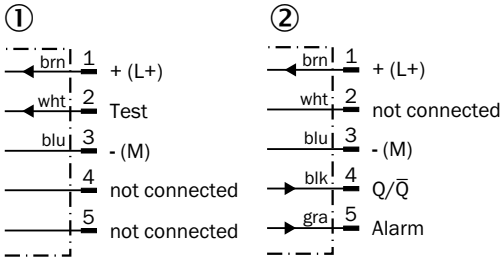

① Sender
② Receiver

Cd-120

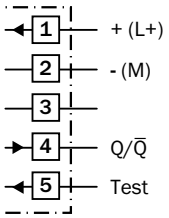

Cd-121

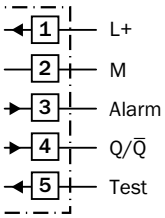

Cd-127

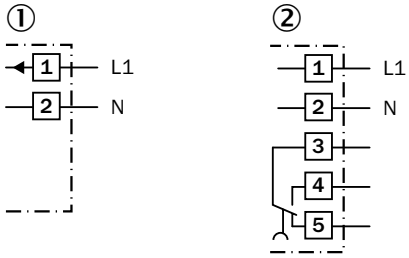

① Sender
② Receiver

Cd-150

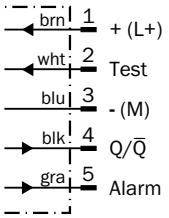

Cd-167

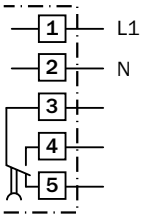

Recommended accessories

Mounting brackets/plates

Mounting brackets

Figure	Material	Description	Model name	Part no.
	Stainless steel	Mounting bracket, small	BEF-WK-W24	4027532
	Stainless steel (1.4301)	Mounting bracket	BEF-WN-W24	2015248

H

Plug connectors and cables

Connecting cable (female connector-open)

- **Connector material:** TPU

Figure	Connection type head A	Connection type head B	Cable material	Enclosure rating	Connecting cable	Model name	Part no.
	Female connector, M12, 4-pin, straight	Cable, open conductor heads	PVC	IP 67	2 m, 4-wire	DOL-1204-G02M	6009382
					5 m, 4-wire	DOL-1204-G05M	6009866
			PUR, halogen-free	IP 65, IP 68, IP 69K	2 m, 4-wire	DOL-1204-G02MC	6025900
					5 m, 4-wire	DOL-1204-G05MC	6025901
	Female connector, M12, 4-pin, angled	Cable, open conductor heads	PVC	IP 67	2 m, 4-wire	DOL-1204-W02M	6009383
					5 m, 4-wire	DOL-1204-W05M	6009867
			PUR, halogen-free	IP 65, IP 68, IP 69K	2 m, 4-wire	DOL-1204-W02MC	6025903
					5 m, 4-wire	DOL-1204-W05MC	6025904

Figure	Connection type head A	Connection type head B	Cable material	Enclosure rating	Connecting cable	Model name	Part no.
	Female connector, M12, 5-pin, straight	Cable, open conductor heads	PVC	IP 67	2 m, 5-wire	DOL-1205-G02M	6008899
					5 m, 5-wire	DOL-1205-G05M	6009868
			PUR, halogen-free	IP 65, IP 68, IP 69K	2 m, 5-wire	DOL-1205-G02MC	6025906
					5 m, 5-wire	DOL-1205-G05MC	6025907
	Female connector, M12, 5-pin, angled	Cable, open conductor heads	PVC	IP 67	2 m, 5-wire	DOL-1205-W02M	6008900
					5 m, 5-wire	DOL-1205-W05M	6009869
			PUR, halogen-free	IP 65, IP 68, IP 69K	2 m, 5-wire	DOL-1205-W02MC	6025909
					5 m, 5-wire	DOL-1205-W05MC	6025910

Female connector (ready to assemble)

Figure	Connection type head A	Connection type head B	Connector material	Enclosure rating	Model name	Part no.
	Female connector, M12, 4-pin, straight	Screw-type terminals	PBT	IP 67	DOS-1204-G	6007302
	Female connector, M12, 4-pin, angled	Screw-type terminals	PBT	IP 67	DOS-1204-W	6007303
	Female connector, M12, 5-pin, straight	Screw-type terminals	PBT	IP 67	DOS-1205-G	6009719
	Female connector, M12, 5-pin, angled	Screw-type terminals	PBT	IP 67	DOS-1205-W	6009720

Alignment aids

Figure	Description	Model name	Part no.
	Adapter for alignment aid AR60	Adapter AR60 for W24-2	4032976

Universal bar clamp systems

Figure	Material	Description	Model name	Part no.
	Zinc diecast	Universal bar clamp for mounting bars with 12 mm diameter	BEF-KHS-KH3	5322626
	Zinc plated steel (sheet), Diecast zinc (clamp)	Plate N04 for universal clamp bracket	BEF-KHS-N04	2051610

Device protection (mechanical)

Cooling elements

Figure	Description	Model name	Part no.
	Water cooling plate	BEF-KP-W24	2015071

Protective housing/tubes

Figure	Material	Description	Model name	Part no.
	Aluminum (anodised)	Dust protection tube, air-purged	OBS-W24	2015069
	Steel, zinc coated	Weather hood for universal clamp bracket	OBW-KHS-M01	2023240
	Aluminum (anodised)	Weather hood	OBW-W24	2015070
	Aluminum (anodised)	Weather hood	WSG1-01	1018470

Reflectors

Angular

Figure	Material	Description	Model name	Part no.
	PMMA/ABS	Rectangular, screw connection, 47 mm x 47 mm	P250	5304812
		Rectangular, screw connection, 38 mm x 15 mm	PL20A	1012719
		Rectangular, screw connection, 56 mm x 28 mm	PL30A	1002314
		Rectangular, screw connection, 37 mm x 56 mm	PL40A	1012720
		Rectangular, screw connection, 80 mm x 80 mm	PL80A	1003865

H

Reflective tape

Figure	Description [1]	Model name	Part no.
	Reflective tape “Diamond Grade”, self-adhesive, customizable size by sheet, 74.9 cm x 91.4 cm	REF-DG-K	4019634

[1] Customizable length by sheet. Width max. 74.9 cm, length max. 91.4 cm.

Round

Figure	Material	Description	Model name	Part no.
	PMMA/ABS	Round, screw connection	C110A	5304549

→ **For additional accessories, please see page L-861**

W24-2 for use in Category 2G explosive environments (gas)

Product description

The W24-2Ex features a rugged metal housing which ensures reliability in harsh industrial conditions. Special electronics allows longer sensing range despite the limited factors of the norms for Category 2G (ATEX, explosive environments). The necessary switching amplifiers are also available.

At a glance

- Classification: EX II 2G Ex ia op is IIC T4 according to Directive 94/9/EC (ATEX)
- Corresponds to Category 2G
- Output type: EN 60947-5-6 (NAMUR)
- M12 or terminal chamber connection: 90° rotatable
- Durable metal housing
- Precise background suppression

Your benefits

- The W24-2Ex features a rugged metal housing that has been IP 69K tested which ensures reliability in harsh industrial conditions
- Special electronics allows longer sensing range despite the limited factors of the norms for Category 2G (ATEX, explosive environments)
- Flexible installation due to 90° rotatable connector

Additional information

→ **www.mysick.com/en/W24-2_Ex**

For more information, just enter the link or scan the QR code and get direct access to technical data, CAD design models, operating instructions, software, application examples and much more.

Detailed technical data

Features

	WT24-2 Ex	WL24-2 Ex
Sensor principle	Photoelectric proximity sensor	Photoelectric retro-reflective sensor
Detection principle	Background suppression	–
Dimensions (W x H x D)	27 mm x 87.5 mm x 65 mm	
Housing design (light emission)	Rectangular	
Sensing range max.	40 mm ... 2,000 mm [1]	0 m ... 22 m [2]
Sensing range	100 mm ... 2,000 mm [1]	0 mm ... 15 mm [2]
Type of light	Infrared light	Visible red light
Light source [3]	LED	
Light spot size (distance)	Ø 50 mm (2,000 mm)	Ø 250 mm (15 m)
Adjustment	Potentiometer	

[1] Object with 90 % reflectance (referred to standard white, DIN 5033)
[2] PL80A.
[3] Average service life of 100,000 h at T_A = +25 °C.

Mechanics/electronics

	WT24-2 Ex	WL24-2 Ex
Supply voltage [1]	5 V DC ... 15.5 V DC	
Ripple [2]	< 0.4 V_{pp}	
Output type	NAMUR	
Switching mode	Light switching	
Response time [3]	≤ 10 ms	
Switching frequency [4]	50 Hz	
Connection type	Terminals with gland [5]/Male connector, M12 [5] (depending on type)	
Circuit protection	A [6], C [7]	
Protection class [8]	II	
Weight	330 g	
Polarisation filter	✔	
Housing material	Zinc diecast	
Optics material	Glass	
Enclosure rating	IP 67	
EC Approval Certificate	PTB 03 ATEX 2105	PTB 08 ATEX 2029
ATEX marking	II 2G Ex ia op is IIC T4 according to directive 94/9/EG (ATEX)	
Hazardous area category	2G	
Input voltage U_i max. [9]	≤ 15.5 V	
Input power P_i max. [9]	≤ 100 mW	
Input current I_i max. [9]	≤ 53 mA	
Internal capacitance C_i max. [9]	80 nF	
Internal inductance L_i max. [9]	0 µH	
Ambient operating temperature	–20 °C ... +60 °C	
Ambient storage temperature	–25 °C ... +70 °C	

[1] Limit values, supply with switching amplifier EN2Ex (internal resistor approx. 1 kOhm)
[2] May not exceed or fall short of V_S tolerances.
[3] Signal transit time with resistive load.
[4] With light/dark ratio 1:1.
[5] Connection rotable by 90°.
[6] A = V_S connections reverse-polarity protected.
[7] C = interference suppression.
[8] Reference voltage: 50 V DC.
[9] For connection to a sperately certified intrinsically safe circuit only.

H

Ordering information

Other models available at www.mysick.com/en/W24-2_Ex

WT24-2 Ex

- **Sensor principle:** photoelectric proximity sensor
- **Output type:** NAMUR

Sensing range max. [1]	Light spot size (distance)	Connection	Connection diagram	Type	Part no.
40 mm ... 2,000 mm	Ø 50 mm (2,000 mm)	Terminal connection with M16 gland	Cd-050	WT24-2X200	1041910
		Connector M12, 4-pin	Cd-122	WT24-2X400	1040722

[1] Object with 90 % reflectance (referred to standard white, DIN 5033)

WL24-2 Ex

- **Sensor principle:** photoelectric retro-reflective sensor
- **Output type:** NAMUR

Sensing range max. [1]	Light spot size (distance)	Connection	Connection diagram	Type	Part no.
0 m ... 22 m	Ø 250 mm (15 m)	Terminal connection with M16 gland	Cd-050	WL24-2X230	1026036
		Connector M12, 4-pin	Cd-122	WL24-2X430	1026037

[1] PL80A.

Dimensional drawings

Dimensions in mm (inch)

WT24-2 EX

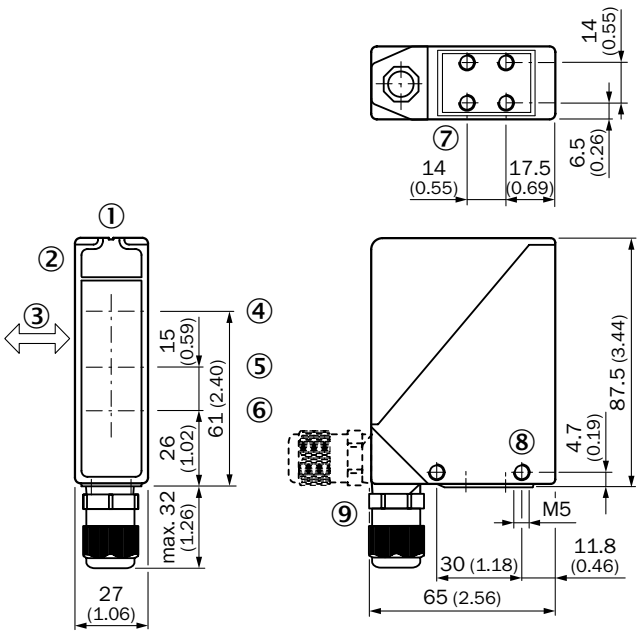

① Alignment sight
② LED signal strength indicator
③ Standard direction of the material being detected
④ Center of optical axis, sender
⑤ Centre of optical axis, receiver (close range)
⑥ Centre of optical axis, receiver (far range)
⑦ M5 threaded mounting hole, 6 mm deep
⑧ M5 threaded mounting hole, through-hole
⑨ M16 screw fixing and plug rotatable by 90°

H

WL24-2 EX

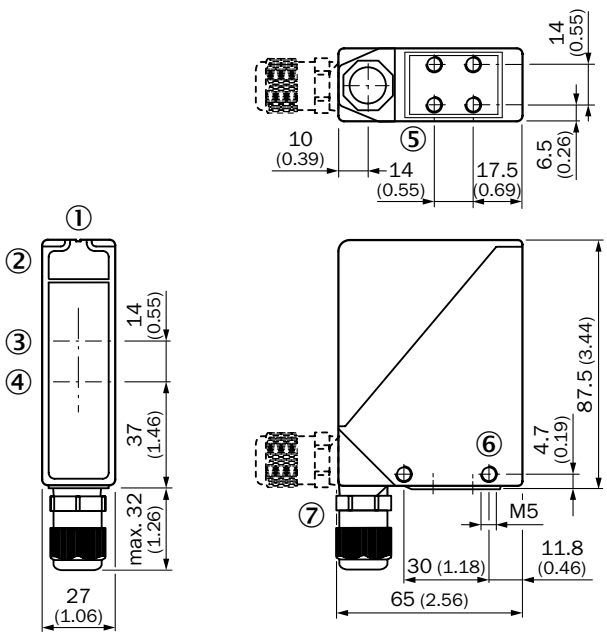

① Alignment sight
② LED signal strength indicator
③ Center of optical axis, sender
④ Center of optical axis, receiver
⑤ M5 threaded mounting hole, 6 mm deep
⑥ M5 threaded mounting hole, through-hole
⑦ M16 screw fixing rotatable by 90°

Adjustments

WT24-2 EX

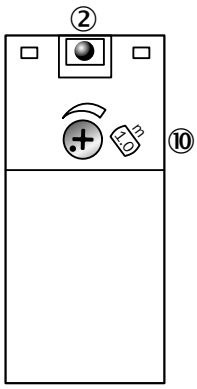

② LED signal strength indicator
⑩ Sensing range adjustment

WL24-2 EX

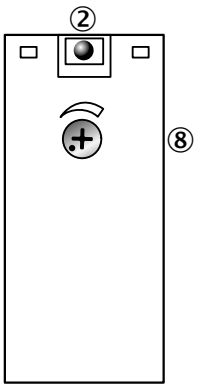

② LED signal strength indicator
⑧ Sensitivity adjustment

H

Characteristic curves

Black-white shift

WT24-2 EX

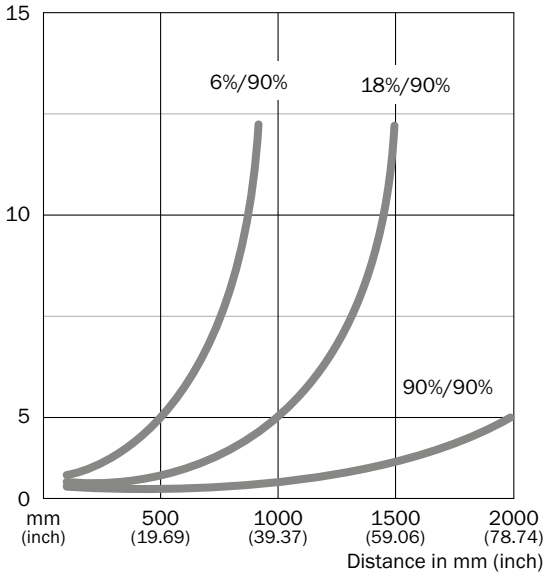

Operating reserve

WL24-2

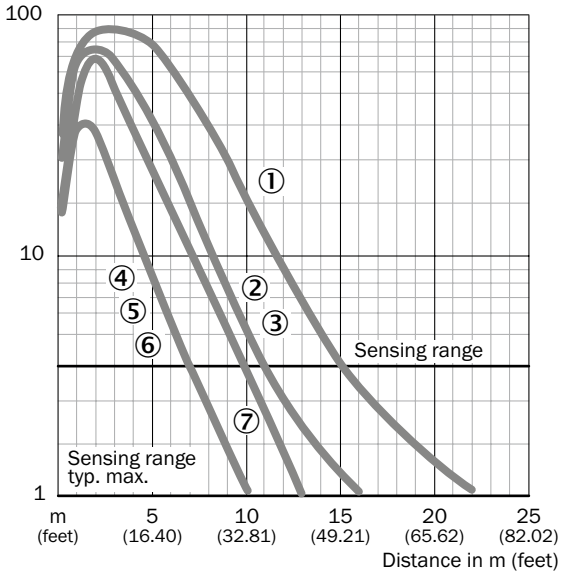

① PL80A
② PL50A
③ PL40A
④ PL30A
⑤ PL20A
⑥ Reflective tape Diamond Grade
⑦ C110A

Bar diagrams

WT24-2

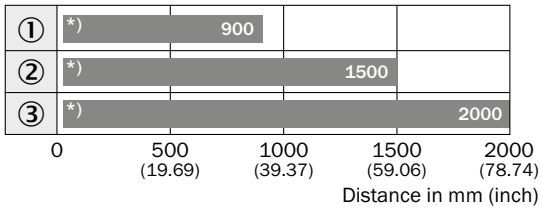

Sensing range

*) Lower bound of detection area depending on the adjusted sensing distance (see blind zone curve)

① Sensing range on black, 6 % remission
② Sensing range on gray, 18 % remission
③ Sensing range on white, 90 % remission

WL24-2

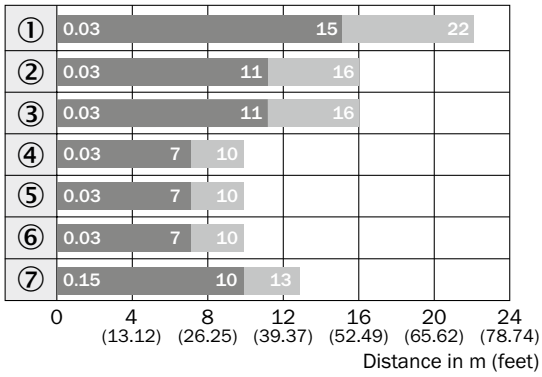

Sensing range Sensing range max.

① PL80A
② PL50A
③ PL40A
④ PL30A
⑤ PL20A
⑥ Reflective tape Diamond Grade
⑦ C110A

Connection diagram

Cd-050

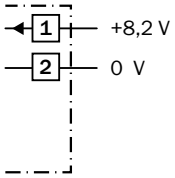

Cd-122

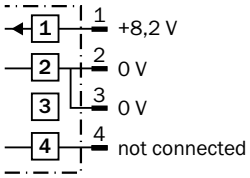

H

Recommended accessories

Mounting brackets/plates

Mounting brackets

Figure	Material	Description	Model name	Part no.
	Stainless steel	Mounting bracket, small	BEF-WK-W24	4027532
	Stainless steel (1.4301)	Mounting bracket	BEF-WN-W24	2015248

Alignment aids

Figure	Description	Model name	Part no.
	Adapter for alignment aid AR60	Adapter AR60 for W24-2	4032976

Others

Figure	Supply voltage	Output function	Approvals	Model name	Part no.
	AC/DC 24 V ... 230 V, 1.3 W	2 channels with invertible SPDT relay	II (1) G [Ex ia] IIC II (1) D [Ex iaD] II (3) G Ex nAC [ia] IIC T4 X	EN2-2EX-1	6041096
	DC 19.2 V ... 30 V, 1 W	2 channels with invertible NO relay	II (1) GD [Ex ia] IIC, IIB II (3) G Ex nAC II T4 X	EN2-2EX-3	6041095

Universal bar clamp systems

H

Figure	Material	Description	Model name	Part no.
	Zinc diecast	Universal bar clamp for mounting bars with 12 mm diameter	BEF-KHS-KH3	5322626
	Zinc plated steel (sheet), Diecast zinc (clamp)	Plate N03 for universal clamp bracket	BEF-KHS-N03	2051609
		Plate N04 for universal clamp bracket	BEF-KHS-N04	2051610

Device protection (mechanical)

Cooling elements

Figure	Description	Model name	Part no.
	Water cooling plate	BEF-KP-W24	2015071

Protective housing/tubes

Figure	Material	Description	Model name	Part no.
	Aluminum (anodised)	Dust protection tube, air-purged	OBS-W24	2015069
	Steel, zinc coated	Weather hood for universal clamp bracket	OBW-KHS-M01	2023240
	Aluminum (anodised)	Weather hood	OBW-W24	2015070
	Aluminum (anodised)	Weather hood	WSG1-01	1018470

Reflectors

Angular

Figure	Material	Description	Model name	Part no.
	PMMA/ABS	Rectangular, screw connection, 47 mm x 47 mm	P250	5304812
		Rectangular, screw connection, 38 mm x 15 mm	PL20A	1012719
		Rectangular, screw connection, 56 mm x 28 mm	PL30A	1002314
		Rectangular, screw connection, 37 mm x 56 mm	PL40A	1012720
		Rectangular, screw connection, 80 mm x 80 mm	PL80A	1003865

Reflective tape

Figure	Description	Model name	Part no.
	Self-adhesive, 50 mm x 60 mm	REF-IRF-56	5314244

Round

Figure	Material	Description	Model name	Part no.
	PMMA/ABS	Round, screw connection	C110A	5304549

→ **For additional accessories, please see page L-861**

H

Photoelectric proximity sensor with a small laser light spot and a large sensing range

Product description

The WT27L-2 Laser photoelectric sensor is ideal for precisely detecting small objects from long distances. These sensors feature crosstalk immunity, background suppression and a laser light source.

At a glance

- 2 mm diameter light spot at a distance of 400 mm
- Precise adjustable background suppression
- Visible red laser LED
- Sensing range adjustment via potentiometer
- UL approval

Your benefits

- Precise detection of very small parts up to a distance of 400 mm due to 2 mm light spot
- Highly visible red laser provides quick and easy alignment
- Durable design provides high resistance to vibration

Additional information

→ **www.mysick.com/en/W27-2_Laser**

For more information, just enter the link or scan the QR code and get direct access to technical data, CAD design models, operating instructions, software, application examples and much more.

Detailed technical data

Features

Sensor principle	Photoelectric proximity sensor
Detection principle	Background suppression
Dimensions (W x H x D)	24.6 mm x 80 mm x 53.5 mm
Housing design (light emission)	Rectangular
Sensing range max. [1]	100 mm ... 800 mm
Sensing range	100 mm ... 800 mm
Type of light	Visible red light
Light source [2]	Laser
Light spot size (distance)	Ø 2 mm (400 mm)
Laser class [3]	1/2 (depending on type)
Adjustment	Potentiometer

[1] Object with 90 % reflectance (referred to standard white, DIN 5033)
[2] Average service life 50,000 h at T_A = +25 °C.
[3] (EN 60825-1), low power. Eyes normally protected by averting reaction and eyelid closing reflex.

Mechanics/electronics

Supply voltage [1]	10 V DC ... 30 V DC
Ripple [2]	≤ 5 %
Power consumption [3]	≤ 35 mA
Output type	PNP/NPN (depending on type)
Output function	Complementary
Switching mode	Light/dark-switching
Output current $I_{max.}$	≤ 100 mA
Response time	< 25 ms [4] < 500 µs [4] (depending on type)
Switching frequency [5]	
Response time: < 25 ms	50 Hz
Response time: < 500 µs	1,000 Hz
Connection type	Male connector
Circuit protection	A [6], C [7], D [8]
Protection class [9]	II
Weight	100 g
Housing material	ABS
Enclosure rating	IP 67
Ambient operating temperature	–10 °C ... +45 °C
Ambient storage temperature	–10 °C ... +75 °C

[1] Limit values, operation in short-circuit protected network max. 8 A.
[2] May not exceed or fall short of V_S tolerances.
[3] Without load.
[4] Signal transit time with resistive load.
[5] With light/dark ratio 1:1.
[6] A = V_S connections reverse-polarity protected.
[7] C = interference suppression.
[8] D = outputs overcurrent and short-circuit protected.
[9] Reference voltage: 50 V DC.

H

Ordering information

Other models available at www.mysick.com/en/W27-2_Laser

WT27-2 Laser

- **Sensor principle:** photoelectric proximity sensor
- **Light spot size (distance):** Ø 2 mm (400 mm)
- **Connection:** Connector M12, 4-pin

Sensing range max. [1]	Laser class	Response time [2]	Switching frequency [3]	Output type	Connection diagram	Type	Part no.
100 mm ... 800 mm	1	< 25 ms	50 Hz	PNP	Cd-083	WT27K-2F430	1059239
	2	< 500 µs	1,000 Hz	PNP	Cd-083	WT27L-2F430	1016019
				NPN	Cd-083	WT27L-2N430	1026165

[1] Object with 90 % reflectance (referred to standard white, DIN 5033)

[2] Signal transit time with resistive load.

[3] With light/dark ratio 1:1.

Dimensional drawings

Dimensions in mm (inch)

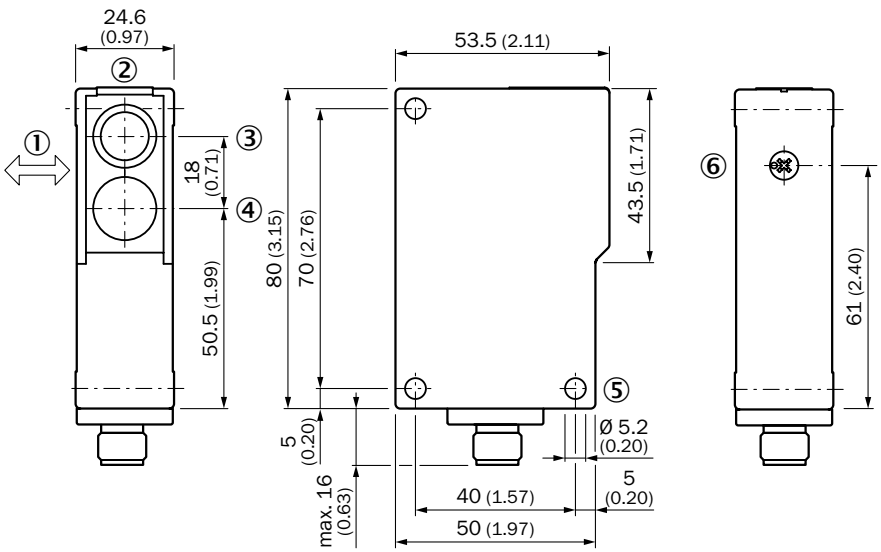

① Standard direction
② LED signal strength indicator
③ Optical axis sender
④ Optical axis, receiver
⑤ Mounting hole, Ø 5.2 mm
⑥ Sensing range adjustment: potentiometer

Adjustments

Potentiometer

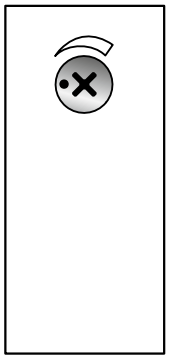

Characteristic curves

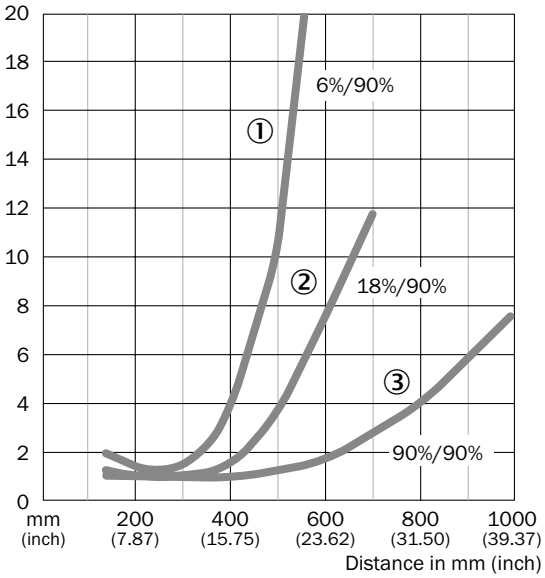

Bar diagrams

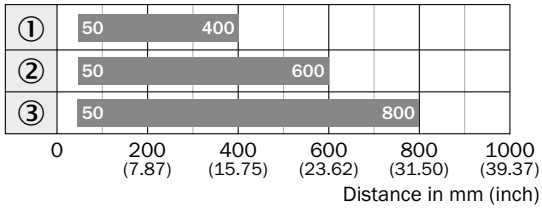

Sensing range

① Sensing range on black, 6 % remission
② Sensing range on gray, 18 % remission
③ Sensing range on white, 90 % remission

Connection diagram

Cd-083

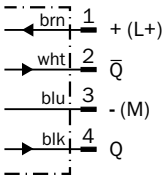

H

Recommended accessories

Mounting brackets/plates

Mounting brackets

Figure	Material	Description	Model name	Part no.
	Steel, zinc coated	Mounting bracket with hinged arm	BEF-WN-MULTI	2064469
		Mounting bracket	BEF-WN-W23	2019085
		Mounting bracket with hinged arm	BEF-WN-W27	2009122

Plug connectors and cables

Connecting cable (female connector-open)

- **Cable material:** PVC
- **Connector material:** TPU

Figure	Connection type head A	Connection type head B	Connecting cable	Enclosure rating	Model name	Part no.
	Female connector, M12, 4-pin, straight	Cable, open conductor heads	2 m, 4-wire	IP 67	DOL-1204-G02M	6009382
			5 m, 4-wire	IP 67	DOL-1204-G05M	6009866
	Female connector, M12, 4-pin, angled	Cable, open conductor heads	2 m, 4-wire	IP 67	DOL-1204-W02M	6009383
			5 m, 4-wire	IP 67	DOL-1204-W05M	6009867

Alignment aids

Figure	Description	Model name	Part no.
	Laser alignment aid for various sensors, laser class 2 (IEC 60825): Never look into the beam.	AR60	1015741

Universal bar clamp systems

Figure	Material	Description	Model name	Part no.
	Zinc plated steel (sheet), Diecast zinc (clamp)	Plate N04 for universal clamp bracket	BEF-KHS-N04	2051610

Device protection (mechanical)

Protective housing/tubes

Figure	Material	Description	Model name	Part no.
	Zinc plated steel (protective housing), Diecast zinc (clamp)	Protective housing for universal clamp	BEF-SG-W27	2039601
	Steel, zinc coated	Weather hood for universal clamp bracket	OBW-KHS-M01	2023240

→ **For additional accessories, please see page L-861**

H

Precise, durable and powerful solution for a wide range of applications

IP 69K | AC/DC | SIRIC®

H

SIRIC® optical ASIC invented by SICK

Product description

The W27 family is designed for harsh industrial environments where it copes easily with heavy vibrations, shocks and extreme temperature fluctuations. The photoelectric proximity sensor is a leader in its class, especially through its reliable detection at long ranges. A sensor with PinPoint LED or a laser photoelectric proximity sensor is available for detection of small targets. The retro-reflective and through-beam versions reduce downtime due to high operating reserves. A diverse range of features further enhance application-specific functionality including, Teach or potentiometer adjustment, time delays, front lens heating, ASi, and universal voltage DC or AC/DC.

At a glance

- Intense visible red emitter LED with consistent light spot for PinPoint versions
- Long sensing ranges with IR LED achieve up to 2500 mm
- Precise background suppression for detection of multi-colored objects
- Universal DC or DC/AC supply voltage
- Operating temperature: –40 °C – +60 °C

Your benefits

- Quick and easy commissioning due to a highly visible red PinPoint LED
- PinPoint technology can replace laser photoelectric proximity sensors in some applications. No laser safety regulations and a longer operating life due to PinPoint technology
- Resistant to ambient light, optical reflections, and crosstalk from other photoelectric devices
- Less contamination due to high operating reserves, reducing downtime
- Resistant to vibrations, reducing downtime
- Operation in harsh environments with temperatures as low as –40 °C
- Quick and easy configuration

Additional information

→ **www.mysick.com/en/W27-3**

For more information, just enter the link or scan the QR code and get direct access to technical data, CAD design models, operating instructions, software, application examples and much more.

Detailed technical data

Features

	DC			AC/DC		
	WTB27-3	WL27-3	WSE27-3	WTB27-3	WL27-3	WSE27-3
Sensor principle	Photoelectric proximity sensor	Photoelectric retro-reflective sensor	Through-beam photoelectric sensor	Photoelectric proximity sensor	Photoelectric retro-reflective sensor	Through-beam photoelectric sensor
Detection principle	Background suppression	Standard optics	–	Background suppression	Standard optics	–
Dimensions (W x H x D)	24.6 mm x 80.6 mm x 54 mm					
Housing design (light emission)	Rectangular					
Sensing range max.	30 mm ... 2,000 mm [1] (depending on type)	0.1 m ... 19 m [2] (depending on type)	0 m ... 35 m	30 mm ... 1,600 mm [1] (depending on type)	0.1 m ... 15 m [2]	0 m ... 35 m
Sensing range	100 mm ... 2,000 mm (depending on type)	0.1 m ... 14 m [2] (depending on type)	0 m ... 25 m	100 mm ... 1,600 mm (depending on type)	0.1 m ... 11 m [2]	0 m ... 25 m
Type of light	Infrared light/visible red light (depending on type)					
Light source	LED [3]/PinPoint LED [3] (depending on type)					
Wave length						
Infrared light	880 nm		–	880 nm	–	
Visible red light	660 nm		645 nm	660 nm		645 nm
Adjustment	Potentiometer Double teach-in button (depending on type)	Potentiometer				
Time type	Switch on delay/Time delay off/Switch on delay and time delay off					
Delay time	Adjustable via time delay selector switch: 0.02 s ... 0.5 s/0.5 s ... 10 s			Adjustable via time delay selector switch: 0.5 s ... 10 s		

[1] Object with 90 % reflectance (referred to standard white, DIN 5033)
[2] PL80A.
[3] Average service life of 100,000 h at T_A = +25 °C.

H

Mechanics/electronics

	DC			AC/DC		
	WTB27-3	WL27-3	WSE27-3	WTB27-3	WL27-3	WSE27-3
Supply voltage	10 V DC ... 30 V DC [1]	24 V AC/DC ... 240 V AC/DC [2]	10 V DC ... 30 V DC [1]	24 V AC/DC ... 240 V AC/DC [2]	10 V DC ... 30 V DC [1]	24 V AC/DC ... 240 V AC/DC [2]
Ripple [3]	≤ 5 V_{SS}			–		
Current consumption	≤ 35 mA ... ≤ 55 mA [4]					
Current consumption, sender	–		35 mA ... 50 mA [4]	–		
Current consumption, receiver	–		20 mA [4] ... 35 mA [4]	–		
Power consumption	–			≤ 2,5 VA	≤ 2,5 VA	≤ 5,5 VA
Output type	PNP / NPN (depending on type)			Relay, electrically isolated [5], Relay, galvanically isolated [6] (depending on type)		Relay, galvanically isolated [6]
Output function	Complementary			Change-over contacts		
Switching mode	Light/dark-switching / Light switching (depending on type)			Light/dark-switching [5]/Light switching [6] (depending on type)		
Switching mode selector	–			Selectable via time delay selector switch		

	DC			AC/DC		
	WTB27-3	WL27-3	WSE27-3	WTB27-3	WL27-3	WSE27-3
Signal voltage PNP HIGH/LOW	Approx. V_S – 2.5 V / 0 V			–		
Signal voltage NPN HIGH/LOW	Approx. V_S / < 2.5 V			–		
Output current $I_{max.}$	≤ 100 mA			–		
Switching current (switching voltage)	–			3 A (250 V AC), 3 A (24 V DC), 0.11 A (250 V DC)		
Response time	≤ 1.5 ms [7] ≤ 1.9 ms [8] (depending on type)	≤ 500 µs [7] ≤ 2.5 ms [7] (depending on type)	≤ 500 µs [7]	≤ 10 ms		
Switching frequency	350 Hz [9], [10]	1,000 Hz [9] ± 200 Hz [9] (depending on type)	1,000 Hz [9]	10 Hz [9]		
Angle of reception	–		Approx. 3°	–		Approx. 3°
Connection type	Cable, 2 m [11]/Male connector, M12/Cable with connector, M12 [11] (depending on type)			Male connector Q6/Cable, 2 m [11] (depending on type)		
Circuit protection	A [12], B [13], C [14]			A [12], C [14]		
Protection class	II [15]			II [16]		
Weight						
Connector M12	100 g		200 g	–		
Connector Q6	100 g		200 g	120 g		240 g
Cable	180 g/300 g (depending on type)	180 g	200 g/360 g (depending on type)	180 g		–
Cable with connector	120 g		–	–		
Polarisation filter	–	✔/– (depending on type)	–		✔	–
Front screen heating	–/✔ (depending on type)					
Housing material	ABS					
Optics material	PMMA					
Enclosure rating	IP 65, IP 66, IP 67, IP 69K (depending on type)			IP 65, IP 66, IP 67(depending on type)	IP 65, IP 67 (depending on type)	IP 65
Usage category	–			AC-15, DC-13, according to EN 60947-1		
Test input sender off	TE to V_S / TE to 0 V (depending on type)			–		
Ambient operating temperature	–40 °C ... +60 °C			–40 °C ... +60 °C [17]		
Ambient storage temperature	–40 °C ... +75 °C					

[1] Limit values, operation in short-circuit protected network max. 8 A.

[2] +- 10 %.

[3] May not exceed or fall short of V_S tolerances.

[4] Without load.

[5] Provide suitable spark suppression for inductive or capacitive loads. Relay contacts are separated from the power supply by a basic isolation of 3 mm. Depending on the application, additional isolation might have to be applied in the user's circuit.

[6] Provide suitable spark suppression for inductive or capacitive loads.

[7] Signal transit time with resistive load.

[8] Signal transit time with resistive load in switching mode. Different values possible in COM2 mode.

[9] With light/dark ratio 1:1.

[10] With light/dark ratio 1:1 in switching mode. Different values possible in COM2 mode.

[11] Do not bend below 0 °C.

[12] A = V_S connections reverse-polarity protected.

[13] B = inputs and output reverse-polarity protected.

[14] C = interference suppression.

[15] Reference voltage: 50 V DC.

[16] Reference voltage: 250 V AC.

[17] UL: 0 °C ... +60 °C.

Ordering information

Other models available at www.mysick.com/en/W27-3

WTB27-3, DC, infrared light

- **Sensor principle:** photoelectric proximity sensor
- **Detection principle:** background suppression
- **Type of light:** infrared light
- **Switching mode:** light/dark-switching

Sensing range max. [1]	Light spot size (distance)	Output type	Adjustment	Connection	Front screen heating	Time functions	Connection diagram	Type	Part no.
30 mm ... 1,600 mm	Ø 25 mm (800 mm)	PNP	Potentiometer	Cable, 4-wire, 2 m	–	–	Cd-094	WTB27-3P1111	1027752
				Cable, 4-wire, 5 m	–	–	Cd-094	WTB27-3P1211	1028065
				Connector M12, 4-pin	–	–	Cd-083	WTB27-3P2411	1025994
					–	✔	Cd-083	WTB27-3F2411	1027753
					✔	–	Cd-083	WTB27-3P2421	1027754
				Connector Q6, 6-pin, DC-coding	–	✔	Cd-178	WTB27-3F2611	1027756
				Cable with connector M12, 4-pin, 270 mm	–	–	Cd-083	WTB27-3P3411	1044438
			Double teach-in button	Cable, 4-wire, 2 m	–	–	Cd-094	WTB27-3P1113	1027759
				Connector M12, 4-pin	–	–	Cd-083	WTB27-3P2413	1027760
		NPN	Potentiometer	Cable, 4-wire, 2 m	–	–	Cd-094	WTB27-3N1111	1044855
				Connector M12, 4-pin	–	✔	Cd-083	WTB27-3E2411	1027755
				Connector Q6, 6-pin, DC-coding	–	✔	Cd-178	WTB27-3E2611	1027757
			Double teach-in button	Connector M12, 4-pin	–	–	Cd-083	WTB27-3N2413	1027761

[1] Object with 90 % reflectance (referred to standard white, DIN 5033)

WTB27-3, DC, visible red light

- **Sensor principle:** photoelectric proximity sensor
- **Detection principle:** background suppression
- **Type of light:** visible red light
- **Switching mode:** light/dark-switching
- **Front screen heating:** –

Sensing range max. [1]	Light spot size (distance)	Output type	Adjustment	Connection	Time functions	Connection diagram	Type	Part no.
30 mm ... 1,100 mm	Ø 15 mm (500 mm)	PNP	Potentiometer	Connector M12, 4-pin	–	Cd-083	WTB27-3P2441	1027744
				Connector Q6, 6-pin, DC-coding	✔	Cd-178	WTB27-3F2641	1027746
				Cable with connector M12, 4-pin, 270 mm, PVC	–	Cd-083	WTB27-3P3441	1029082
			Double teach-in button	Connector M12, 4-pin	–	Cd-083	WTB27-3P2443	1027745
		NPN	Potentiometer	Connector Q6, 6-pin, DC-coding	✔	Cd-178	WTB27-3E2641	1027747
30 mm ... 2,000 mm	Ø 12 mm (800 mm)	PNP	Potentiometer	Connector M12, 4-pin	–	Cd-083	WTB27-3P2461	1044163
				Cable with connector M12, 4-pin	–	Cd-083	WTB27-3P3461	1048546
		NPN	Potentiometer	Cable, 4-wire, 2 m, PVC	–	Cd-094	WTB27-3N1161	1051644

[1] Object with 90 % reflectance (referred to standard white, DIN 5033)

WL27-3, DC, visible red light

- **Sensor principle:** photoelectric retro-reflective sensor
- **Type of light:** visible red light

Sensing range max. [1]	Light spot size (distance)	Output type	Switching mode	Adjustment	Connection	Time functions	Connection diagram	Type	Part no.
0.1 m ... 15 m	Ø 220 mm (10 m)	PNP	Light/dark-switching	Potentiometer	Cable, 4-wire, 2 m	–	Cd-094	WL27-3P1131	1027768
					Connector M12, 4-pin	–	Cd-083	WL27-3P2431	1027982
								WL27-3P2451	1027770
					Cable with connector M12, 4-pin, 270 mm	–	Cd-083	WL27-3P3431	1029081
					Connector Q6, 6-pin, DC-coding	✔	Cd-178	WL27-3F2631	1027772
				–	Connector M12, 4-pin	–	Cd-083	WL27-3P2430	1027769
								WL27-3P2450	1027771
					Connector M12, 4-pin	–	Cd-101	WL27-3K2430	1028069
			Light switching	–	Connector M12, 4-pin	–	Cd-104	WL27-3V2430	1028063
		NPN	Light/dark-switching	Potentiometer	Connector Q6, 6-pin, DC-coding	✔	Cd-178	WL27-3E2631	1027773
0.1 m ... 19 m	Ø 60 mm (6 m)	PNP	Light/dark-switching	–	Cable with connector M12, 4-pin, 270 mm	–	Cd-083	WL27-3P3460	1047955
				Potentiometer	Connector M12, 4-pin	–	Cd-083	WL27-3P2461	1044166

[1] PL80A.

WL27-3, DC, detecting objects wrapped in film

- **Sensor principle:** photoelectric retro-reflective sensor
- **Type of light:** visible red light
- **Switching mode:** light/dark-switching

Sensing range max.	Light spot size (distance)	Output type	Connection	Connection diagram	Type	Part no.
0.1 m ... 4.3 m [1]	Ø 90 mm (4 m)	PNP	Connector M12, 4-pin	Cd-083	WL27-3P2430S01	1028057
0.1 m ... 3 m [2]	Ø 30 mm (3 m)	PNP	Connector M12, 4-pin	Cd-083	WL27-3P2460S14	1047908

[1] PL80A.
[2] PL20A.

WSE27-3, DC, infrared light

- **Sensor principle:** through-beam photoelectric sensor
- **Switching mode:** light/dark-switching

Sensing range max.	Light spot size (distance)	Output type	Adjustment	Connection	Front screen heating	Time functions	Connection diagram	Type	Part no.
0 m ... 35 m	Ø 3.7 m (25 m)	PNP	–	Cable, 4-wire, 3 m, PVC	–	–	Cd-088	WSE27-3P1710	1028059
				Connector M12, 4-pin	–	–	Cd-072	WSE27-3P2410	1048199

WSE27-3, DC, visible red light

- **Sensor principle:** through-beam photoelectric sensor
- **Switching mode:** light/dark-switching

Sensing range max.	Light spot size (distance)	Output type	Adjustment	Connection	Front screen heating	Time functions	Connection diagram	Type	Part no.
0 m ... 35 m	Ø 600 mm (25 m)	PNP	–	Connector M12, 4-pin	–	–	Cd-072	WSE27-3P2430	1027790
					✔	–	Cd-072	WSE27-3P2450	1027791
			Potentiometer	Connector Q6, 6-pin, DC-coding	–	✔	Cd-143	WSE27-3F2631	1027792
		NPN	–	Cable, 4-wire, 2 m, PVC	–	–	Cd-088	WSE27-3N1130	1047803
				Connector M12, 4-pin	–	–	Cd-072	WSE27-3N2430	1028072
			Potentiometer	Connector Q6, 6-pin, DC-coding	–	✔	Cd-143	WSE27-3E2631	1027793

WTB27-3, AC/DC

- **Sensor principle:** photoelectric proximity sensor
- **Detection principle:** background suppression
- **Output type:** relay
- **Adjustment:** potentiometer

Type of light	Sensing range max. [1]	Light spot size (distance)	Switching mode	Connection	Time functions	Connection diagram	Type	Part no.
Infrared light	30 mm ... 1,600 mm	Ø 25 mm (800 mm)	Light/dark-switching [2]	Connector Q6, 6-pin, AC/UC-coding	✔	Cd-181	WTB27-3R2611	1027763
			Light switching [3]	Cable, 5-wire, 2 m	–	Cd-161	WTB27-3S1511	1027762
Visible red light	30 mm ... 1,100 mm	Ø 15 mm (500 mm)	Light/dark-switching [2]	Connector Q6, 6-pin, AC/UC-coding	✔	Cd-181	WTB27-3R2641	1027750
			Light switching [3]	Cable, 5-wire, 2 m	–	Cd-161	WTB27-3S1541	1027749

[1] Object with 90 % reflectance (referred to standard white, DIN 5033)

[2] Provide suitable spark suppression for inductive or capacitive loads. Relay contacts are separated from the power supply by a basic isolation of 3 mm. Depending on the application, additional isolation might have to be applied in the user's circuit.

[3] Provide suitable spark suppression for inductive or capacitive loads.

H

WL27-3, AC/DC

- **Sensor principle:** photoelectric retro-reflective sensor
- **Detection principle:** standard optics
- **Type of light:** visible red light
- **Output type:** relay
- **Adjustment:** potentiometer

Sensing range max. [1]	Light spot size (distance)	Switching mode	Connection	Time functions	Connection diagram	Type	Part no.
0.1 m ... 15 m	Ø 220 mm (10 mm)	Light/dark-switching [2]	Connector Q6, 6-pin, AC/UC-coding	✔	Cd-181	WL27-3R2631	1027776
		Light switching [3]	Cable, 5-wire, 2 m, PVC	–	Cd-161	WL27-3S1531	1027775

[1] PL80A.

[2] Provide suitable spark suppression for inductive or capacitive loads. Relay contacts are separated from the power supply by a basic isolation of 3 mm. Depending on the application, additional isolation might have to be applied in the user's circuit.

[3] Provide suitable spark suppression for inductive or capacitive loads.

WSE27-3, AC/DC

- **Sensor principle:** through-beam photoelectric sensor
- **Type of light:** visible red light
- **Output type:** relay
- **Adjustment:** potentiometer

Sensing range max.	Light spot size (distance)	Switching mode	Connection	Time functions	Connection diagram	Type	Part no.
0 m ... 35 m	Ø 600 mm (25 mm)	Light/dark-switching [1]	Connector Q6, 6-pin, AC/UC-coding	✔	Cd-159	WSE27-3R2631	1027795

[1] Provide suitable spark suppression for inductive or capacitive loads. Relay contacts are separated from the power supply by a basic isolation of 3 mm. Depending on the application, additional isolation might have to be applied in the user's circuit.

Dimensional drawings

Dimensions in mm (inch)

WTB27-3, potentiometer

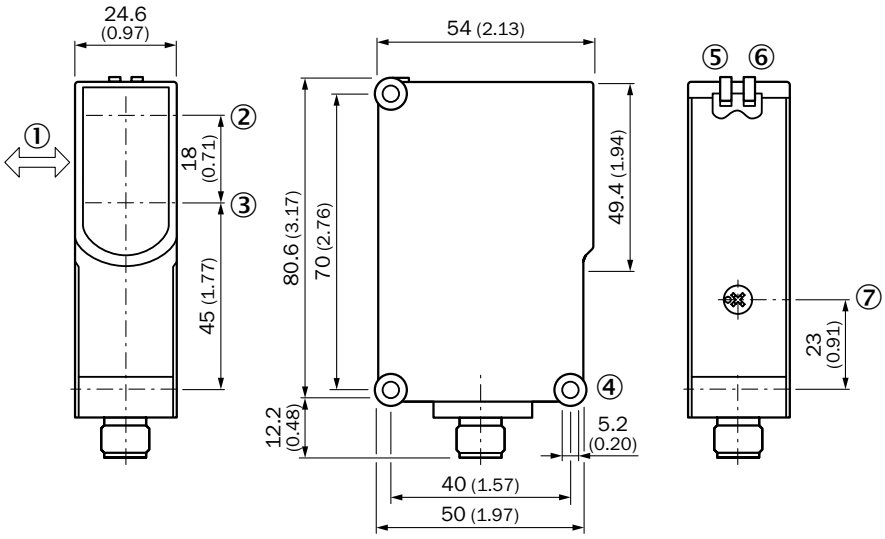

① Standard direction of the material being detected
② Optical axis, sender
③ Optical axis, receiver
④ Mounting hole ø 5.2 mm
⑤ Status indicator LED green: power on
⑥ Status indicator LED, yellow: Status of received light beam
⑦ Sensing range adjustment: potentiometer

WTB27-3, double teach-in button

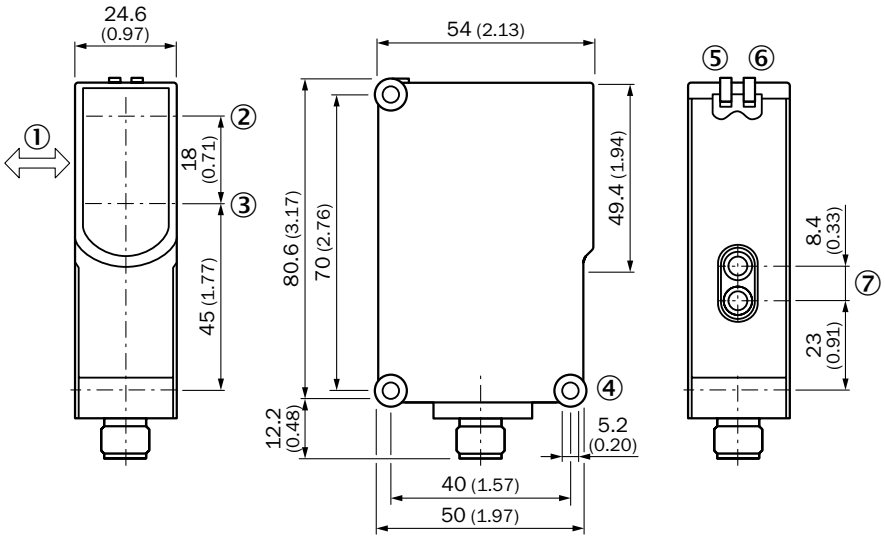

① Standard direction of the material being detected
② Optical axis, sender
③ Optical axis, receiver
④ Mounting hole ø 5.2 mm
⑤ Status indicator LED green: power on
⑥ Status indicator LED, yellow: Status of received light beam
⑦ Sensing range adjustment: double teach button

WTB27-3, potentiometer, time functions

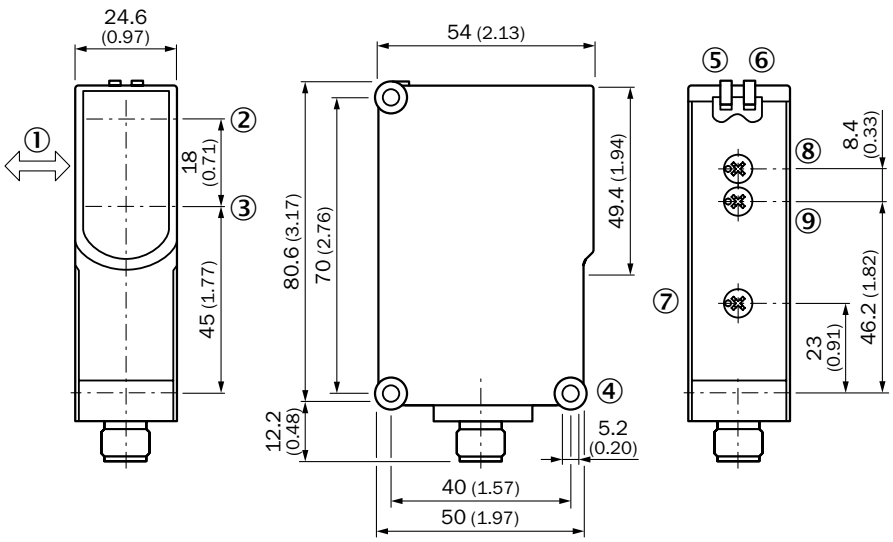

① Standard direction of the material being detected
② Optical axis, sender
③ Optical axis, receiver
④ Mounting hole ø 5.2 mm
⑤ Status indicator LED green: power on
⑥ Status indicator LED, yellow: Status of received light beam
⑦ Sensing range adjustment: potentiometer
⑧ Time control
⑨ Time delay selector switch

WL27-3, WSE27-3

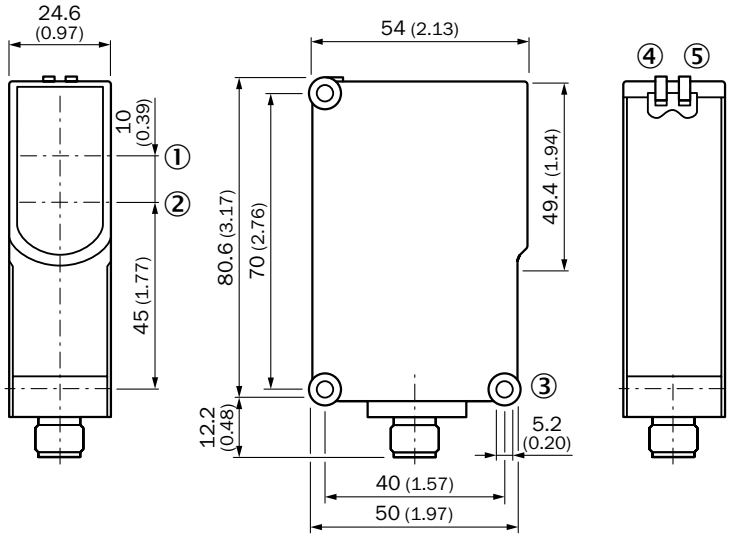

① Optical axis, sender
② Optical axis, receiver
③ Mounting hole ø 5.2 mm
④ Status indicator LED green: power on
⑤ Status indicator LED, yellow: Status of received light beam

WL27-3, potentiometer

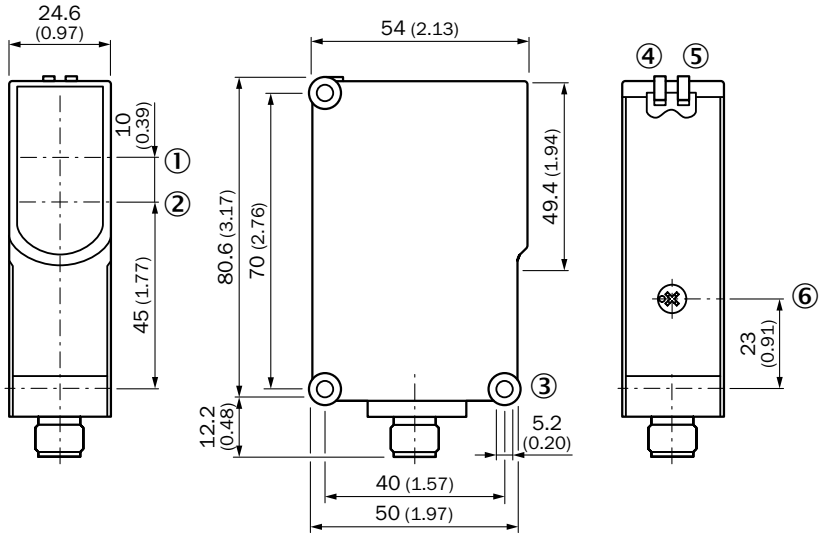

① Optical axis, sender
② Optical axis, receiver
③ Mounting hole ø 5.2 mm
④ Status indicator LED green: power on
⑤ Status indicator LED, yellow: Status of received light beam
⑥ Sensitivity control (10 revolutions)

H

WL27-3, WSE27-3, potentiometer, time functions

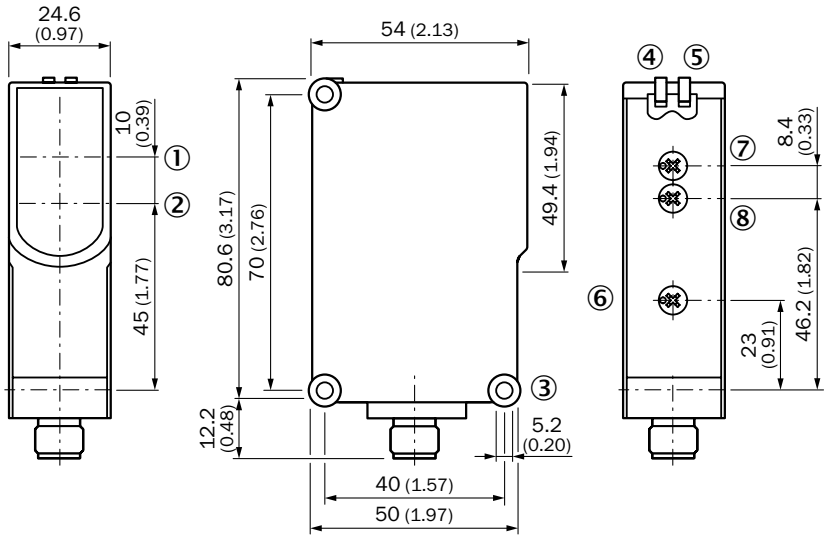

① Optical axis sender
② Optical axis, receiver
③ Mounting hole ø 5.2 mm
④ Status indicator LED green: power on
⑤ Status indicator LED, yellow: Status of received light beam
⑥ Sensitivity control (10 revolutions)
⑦ Time control
⑧ Time delay selector switch

Adjustments

Potentiometer

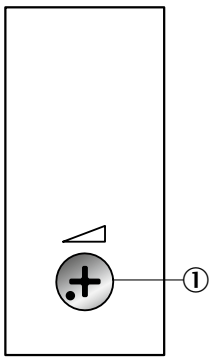

① Potentiometer

Double teach-in button

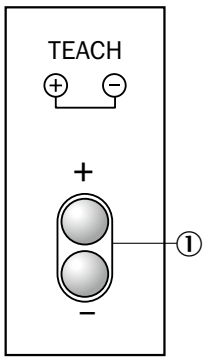

① Double teach-in button

Potentiometer, time functions

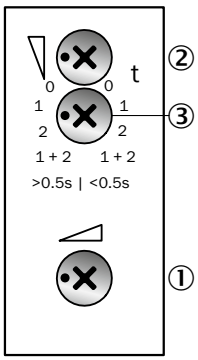

① Potentiometer
② Time control
③ Time delay selector switch

Potentiometer, time functions, light-/dark-switch

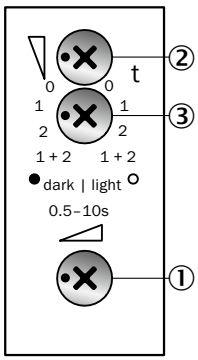

① Potentiometer
② Time control
③ Time delay selector switch

H

Characteristic curves

Black-white shift

WTB27-3, infrared

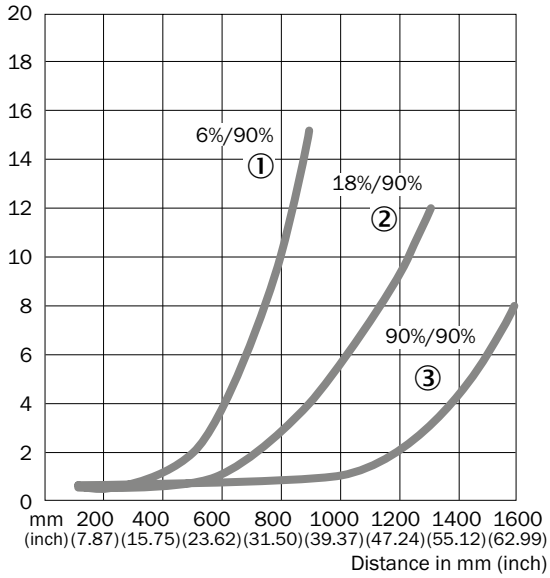

① Sensing range on black, 6 % remission
② Sensing range on gray, 18 % remission
③ Sensing range on white, 90 % remission

WTB27-3, red light

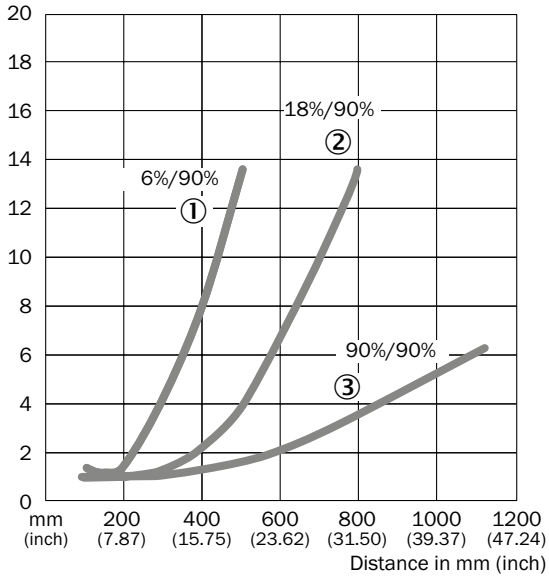

① Sensing range on black, 6 % remission
② Sensing range on gray, 18 % remission
③ Sensing range on white, 90 % remission

WTB27-3, PinPoint LED

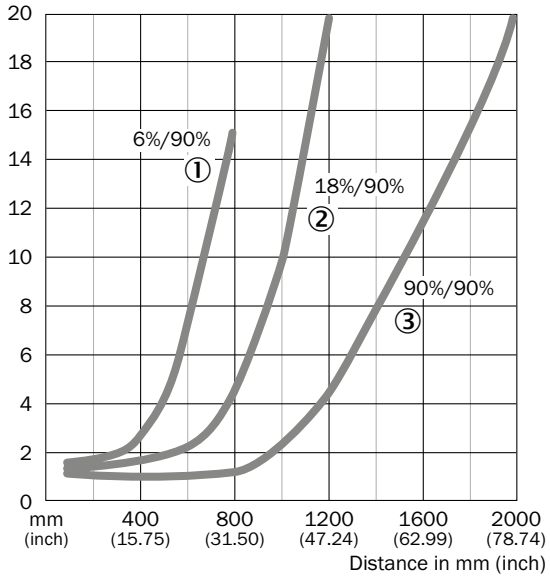

① Sensing range on black, 6 % remission
② Sensing range on gray, 18 % remission
③ Sensing range on white, 90 % remission

H

Operating reserve

WL27-3

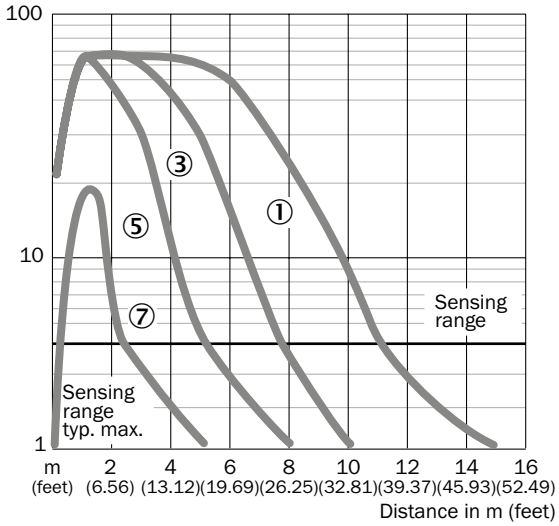

① PL80A
③ PL40A
⑤ PL20A
⑦ Reflective tape Diamond Grade

WSE27-3

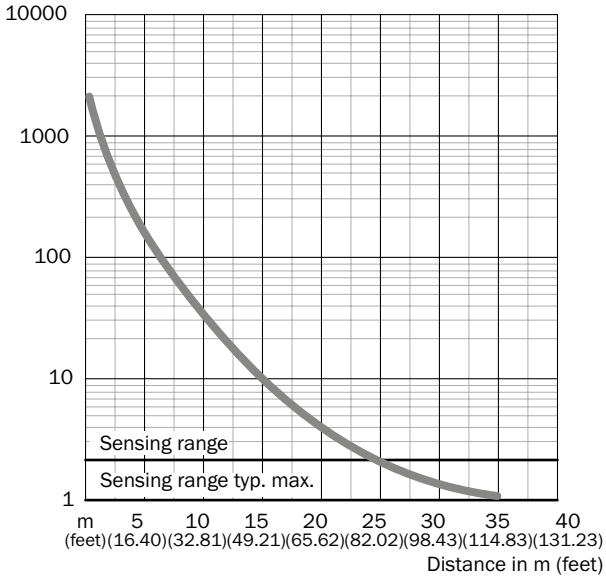

Bar diagrams

WTB27-3, infrared

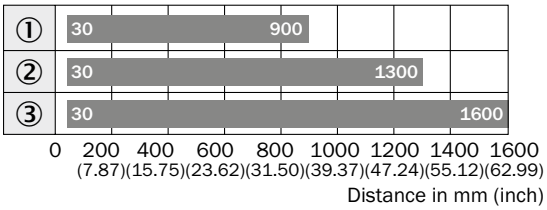

Sensing range

① Sensing range on black, 6 % remission
② Sensing range on gray, 18 % remission
③ Sensing range on white, 90 % remission

WTB27-3, red light

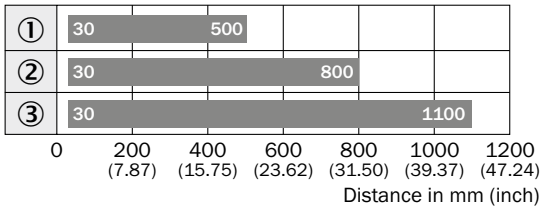

Sensing range

① Sensing range on black, 6 % remission
② Sensing range on gray, 18 % remission
③ Sensing range on white, 90 % remission

H

WTB27-3, PinPoint LED

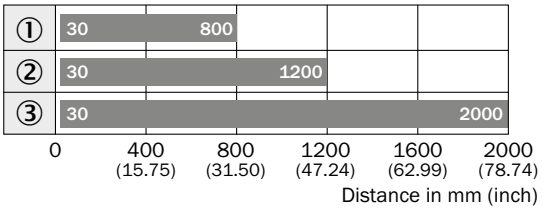

Sensing range

① Sensing range on black, 6 % remission
② Sensing range on gray, 18 % remission
③ Sensing range on white, 90 % remission

WL27-3

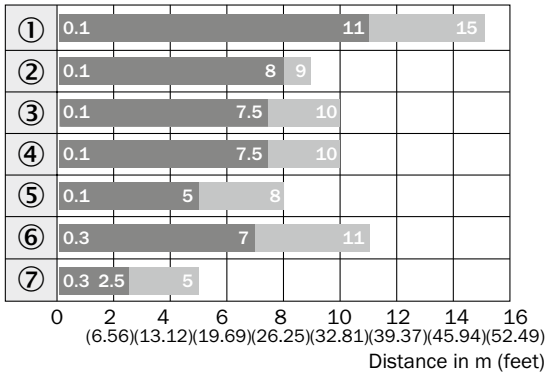

Sensing range Sensing range max.

① PL80A
② PL50A
③ PL40A
④ PL30A
⑤ PL20A
⑥ C110A
⑦ Reflective tape Diamond Grade

WSE27-3

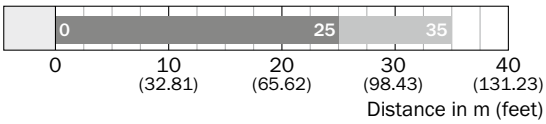

Sensing range Sensing range typ. max.

Connection diagram

Cd-072

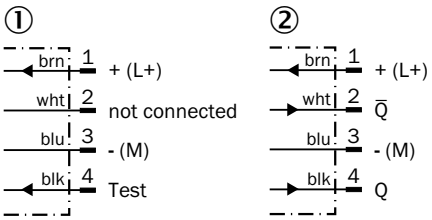

① Sender
② Receiver

Cd-083

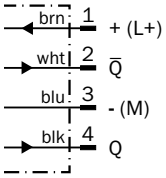

Cd-088

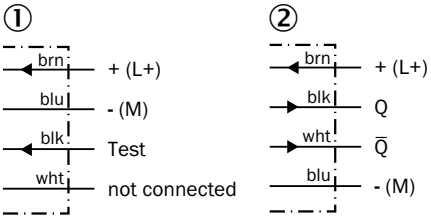

① Sender
② Receiver

Cd-094

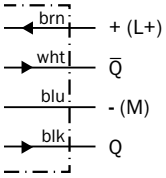

H

Cd-101

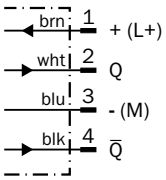

Cd-104

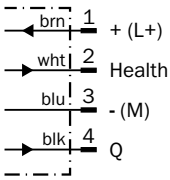

Cd-143

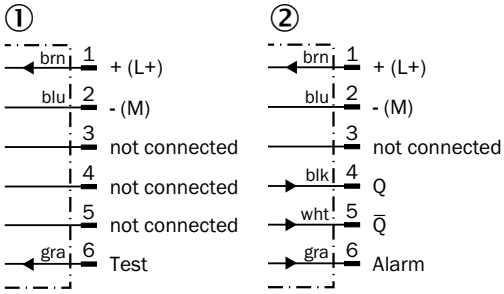

① Sender
② Receiver

Cd-159

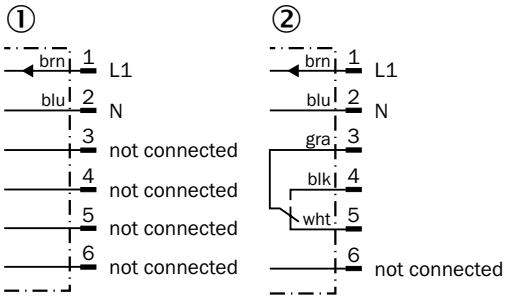

① Sender
② Receiver

Cd-161

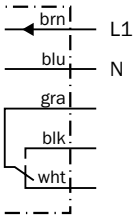

Cd-178

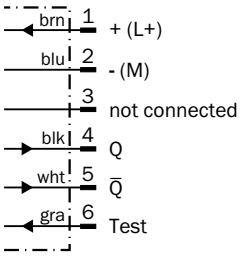

Cd-181

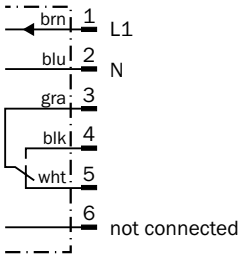

H

Recommended accessories

Mounting brackets/plates

Mounting brackets

Figure	Material	Description	Model name	Part no.
	Steel, zinc coated	Mounting bracket with hinged arm	BEF-WN-MULTI	2064469
			BEF-WN-W27	2009122

Plug connectors and cables

Connecting cable (female connector-open)

- **Connector material:** TPU

Figure	Connection type head A	Connection type head B	Connecting cable	Cable material	Enclosure rating	Model name	Part no.
	Female connector, M12, 4-pin, straight	Cable, open conductor heads	2 m, 4-wire	PVC	IP 67	DOL-1204-G02M	6009382
			5 m, 4-wire	PVC	IP 67	DOL-1204-G05M	6009866
			2 m, 4-wire	PUR, halogen-free	IP 65, IP 68, IP 69K	DOL-1204-G02MC	6025900
			5 m, 4-wire	PUR, halogen-free	IP 65, IP 68, IP 69K	DOL-1204-G05MC	6025901
	Female connector, M12, 4-pin, angled, with 3 LEDs	Cable, open conductor heads	2 m, 4-wire	PVC	IP 67	DOL-1204-L02M	6027945
			5 m, 4-wire	PVC	IP 67	DOL-1204-L05M	6027944
	Female connector, M12, 4-pin, angled	Cable, open conductor heads	2 m, 4-wire	PVC	IP 67	DOL-1204-W02M	6009383
			5 m, 4-wire	PVC	IP 67	DOL-1204-W05M	6009867
			2 m, 4-wire	PUR, halogen-free	IP 65, IP 68, IP 69K	DOL-1204-W02MC	6025903
			5 m, 4-wire	PUR, halogen-free	IP 65, IP 68, IP 69K	DOL-1204-W05MC	6025904

Female connector (ready to assemble)

Figure	Connection type head A	Connection type head B	Connector material	Enclosure rating	Model name	Part no.
	Female connector, M12, 4-pin, straight	Screw-type terminals	PBT	IP 67	DOS-1204-G	6007302
	Female connector, M12, 4-pin, angled	Screw-type terminals	PBT	IP 67	DOS-1204-W	6007303

H

Male connector (ready to assemble)

Figure	Connection type head A	Connection type head B	Connector material	Enclosure rating	Model name	Part no.
	Male connector, M12, 4-pin, straight	Screw-type terminals	PBT	IP 67	STE-1204-G	6009932
	Male connector, M12, 4-pin, angled	Screw-type terminals	PBT	IP 67	STE-1204-W	6022084

Universal bar clamp systems

Figure	Material	Description	Model name	Part no.
	Zinc plated steel (sheet), Diecast zinc (clamp)	Plate N04 for universal clamp bracket	BEF-KHS-N04	2051610

Device protection (mechanical)

Protective housing/tubes

Figure	Material	Description	Model name	Part no.
	Zinc plated steel (protective housing), Diecast zinc (clamp)	Protective housing for universal clamp	BEF-SG-W27	2039601
	Steel, zinc coated	Weather hood for universal clamp bracket	OBW-KHS-M01	2023240

Reflectors

Angular

H

Figure	Material	Description	Model name	Part no.
	PMMA/ABS	Rectangular, screw connection, 47 mm x 47 mm	P250	5304812
		Rectangular, screw connection, 38 mm x 15 mm	PL20A	1012719
		Rectangular, screw connection, 56 mm x 28 mm	PL30A	1002314
		Rectangular, screw connection, 37 mm x 56 mm	PL40A	1012720
		Rectangular, screw connection, 80 mm x 80 mm	PL80A	1003865

Reflective tape

Figure	Description	Model name	Part no.
	Reflective tape “Diamond Grade”, self-adhesive, customizable size by sheet, 74.9 cm x 91.4 cm [1]	REF-DG-K	4019634
	Self-adhesive, 50 mm x 60 mm	REF-IRF-56	5314244

[1] Customizable length by sheet. Width max. 74.9 cm, length max. 91.4 cm.

Round

Figure	Material	Description	Model name	Part no.
	PMMA/ABS	Round, screw connection	C110A	5304549

→ **For additional accessories, please see page L-861**

H

Ready-to-install sensors compliant with ATEX category 3G/3D

Product description

The W27 family is designed for harsh industrial environments where it copes easily with heavy vibrations, shocks and extreme temperature fluctuations. The W27-3 Ex photoelectric sensor meets category 3G/3D (ATEX) requirements for use in explosive environments. These sensors are enclosed in a rugged metal housing that provides users with a ready-to-install solution that complies with all its aspects. For, besides limit values for temperature, performance or UV resistance, the standard also prescribes a specific mechanical stability that conventional sensors do not meet.

At a glance

- Classification: EX II 3G EX nA op is IIB T4 Gc X, EX II 3D EX tc IIIB T135 °C Dc IP67 X according to Directive 94/9/EC (ATEX)
- Corresponds to category 3D/3G
- Conform to standards and ready-to-install: Sensor and additional protective housing (stainless steel 1.4301)
- Long sensing range with IR LED
- High level of operating reserve
- Resistant to ambient light, optical reflections, and crosstalk from other photoelectric devices

Your benefits

- Ready-to-install sensors including rugged metal housing conform with the 3G/3D category for explosive zones (ATEX)
- Resistant to ambient light, optical reflections, and immune to crosstalk from other photoelectric devices, reducing false detection
- Long sensing range with high operating reserve
- Resistant to vibrations, reducing downtime
- Withstands harsh environments with temperatures between –20 °C – +50 °C

Additional information

→ **www.mysick.com/en/W27-3_Ex**

For more information, just enter the link or scan the QR code and get direct access to technical data, CAD design models, operating instructions, software, application examples and much more.

Detailed technical data

Features

	WT27-3 Ex	WL27-3 Ex	WSE27-3 Ex
Sensor principle	Photoelectric proximity sensor	Photoelectric retro-reflective sensor	Through-beam photoelectric sensor
Detection principle	Background suppression	Standard optics	–
Dimensions (W x H x D)	31.4 mm x 112.3 mm x 70.4 mm		
Housing design (light emission)	Rectangular		
Sensing range max.	30 mm ... 1,600 mm [1]	0.1 m ... 15 m [2]	0 m ... 35 m
Sensing range	100 mm ... 1,600 mm	0.1 m ... 11 m [2]	0 m ... 25 m
Type of light	Infrared light	Visible red light	
Light source [3]	LED		
Light spot size (distance)	Ø 25 mm (800 mm)	Ø 220 mm (10 m)	Ø 600 mm (25 m)
Angle of dispersion	–	Approx. 1.5°	
Wave length	880 nm	660 nm	645 nm
Adjustment	Potentiometer		–

[1] Object with 90 % reflectance (referred to standard white, DIN 5033)
[2] PL80A.
[3] Average service life of 100,000 h at T_A = +25 °C.

Mechanics/electronics

	WT27-3 Ex	WL27-3 Ex	WSE27-3 Ex
Supply voltage [1]	10 V DC ... 30 V DC		
Ripple [2]	≤ 5 V_{pp}		
Current consumption [3]	≤ 40 mA	≤ 30 mA	35 mA
Current consumption, sender [3]	–		35 mA
Current consumption, receiver [3]	–		20 mA
Output type	PNP		
Output function	Complementary		
Switching mode	Light/dark-switching		
Signal voltage PNP HIGH/LOW	Approx. V_S – 2.5 V / 0 V		
Output current $I_{max.}$	≤ 100 mA		
Response time [4]	≤ 1.5 ms	≤ 500 µs	
Switching frequency [5]	350 Hz	1,000 Hz	
Angle of reception	–		Approx. 3°
Connection type	Cable, 10 m [6] Cable with connector, M12 (depending on type)		
Circuit protection	A [7], B [8], C [9]		
Protection class [10]	II		
Weight	750 g		1,500 g
Polarisation filter	–	✔	–
Housing material			
Sensor	ABS		
Protection housing	Stainless steel V2A (1.4301)		
Optics material	PMMA		
Enclosure rating	IP 67		

H

	WT27-3 Ex	WL27-3 Ex	WSE27-3 Ex
ATEX marking	EX II 3G EX nA op is IIB T4 Gc X/EX II 3D EX tc IIIB T135 °C Dc		
Hazardous area category	3D, 3G		
Ambient operating temperature	–20 °C ... +50 °C		
Ambient storage temperature	–40 °C ... +75 °C		

[1] Limit values, operation in short-circuit protected network max. 8 A.
[2] May not exceed or fall short of V_S tolerances.
[3] Without load.
[4] Signal transit time with resistive load.
[5] With light/dark ratio 1:1.
[6] Do not bend below 0 °C.
[7] A = V_S connections reverse-polarity protected.
[8] B = inputs and output reverse-polarity protected.
[9] C = interference suppression.
[10] Reference voltage: 50 V DC.

Ordering information

Other models available at www.mysick.com/en/W27-3_Ex

WT27-3 Ex

- **Sensor principle:** photoelectric proximity sensor

Sensing range max. [1]	Light spot size (distance)	Output type	Connection	Connection diagram	Type	Part no.
30 mm ... 1,600 mm	Ø 25 mm (800 mm)	PNP	Cable, 4-wire, 10 m	Cd-094	WTB27X-3P1811	1027988

[1] Object with 90 % reflectance (referred to standard white, DIN 5033)

WL27-3 Ex

- **Sensor principle:** photoelectric retro-reflective sensor

Sensing range max. [1]	Light spot size (distance)	Output type	Connection	Connection diagram	Type	Part no.
0.1 m ... 15 m	Ø 220 mm (10 mm)	PNP	Cable, 4-wire, 10 m, PVC	Cd-094	WL27X-3P1831	1027989
			Cable with connector M12, 4-pin	Cd-094	WL27X-3P3431	1029955

[1] PL80A.

H

WSE27-3 Ex

- **Sensor principle:** through-beam photoelectric sensor

Sensing range max.	Light spot size (distance)	Output type	Connection	Connection diagram	Type	Part no.
0 m ... 35 m	Ø 600 mm (25 m)	PNP	Cable, 4-wire, 10 m	Cd-088	WSE27X-3P1830	1027991

Dimensional drawings

Dimensions in mm (inch)

WTB27-3 EX

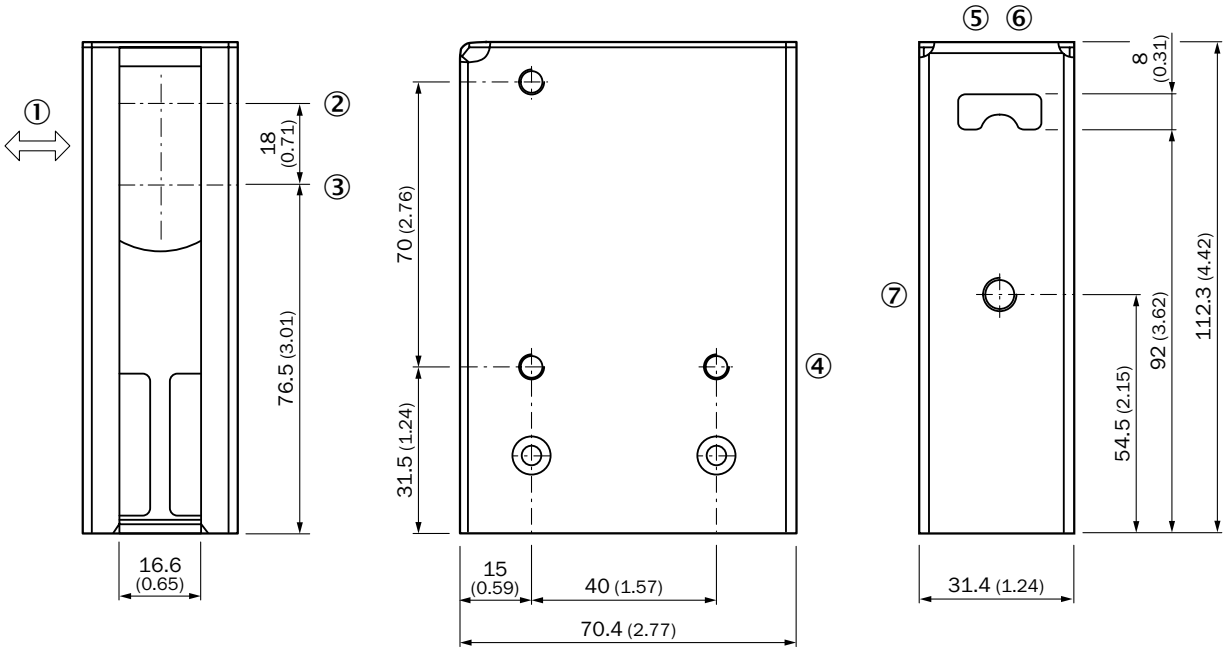

① Standard direction
② Optical axis, sender
③ Optical axis, receiver
④ Mounting hole, Ø 5.2 mm
⑤ Status indicator LED green: power on
⑥ Status indicator LED, yellow: Status of received light beam
⑦ Sensing range adjustment: potentiometer

WL27-3 EX

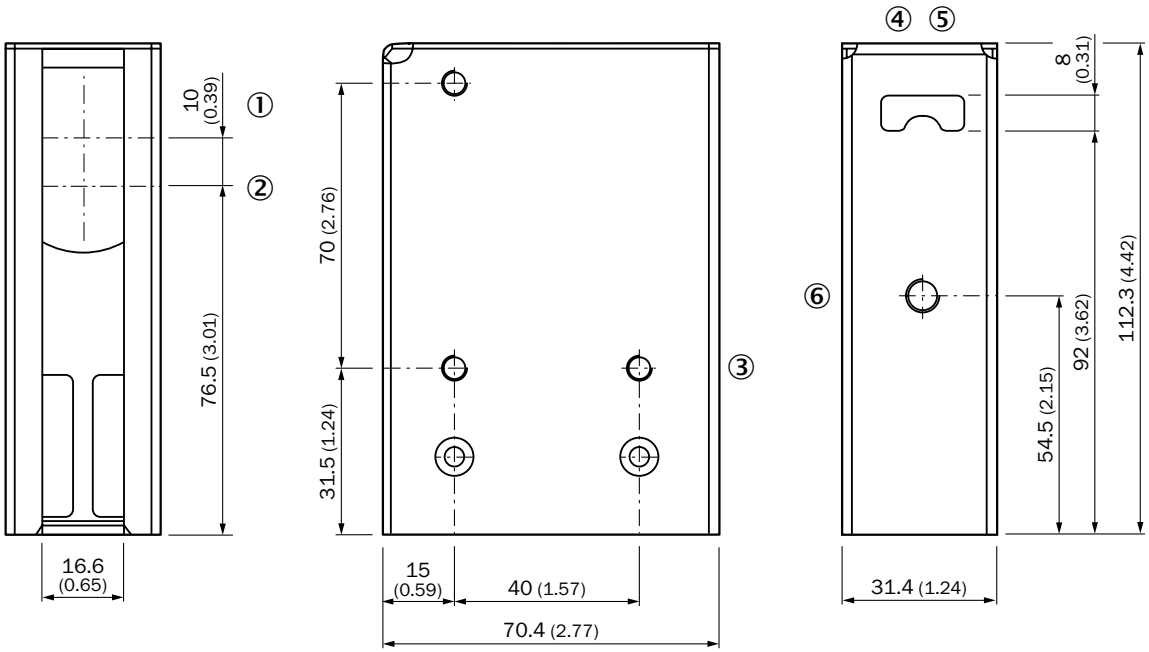

① Optical axis, sender
② Optical axis, receiver
③ Mounting hole, Ø 5.2 mm
④ Sensitivity adjustment
⑤ Status indicator LED, yellow: Status of received light beam

WSE27-3 EX

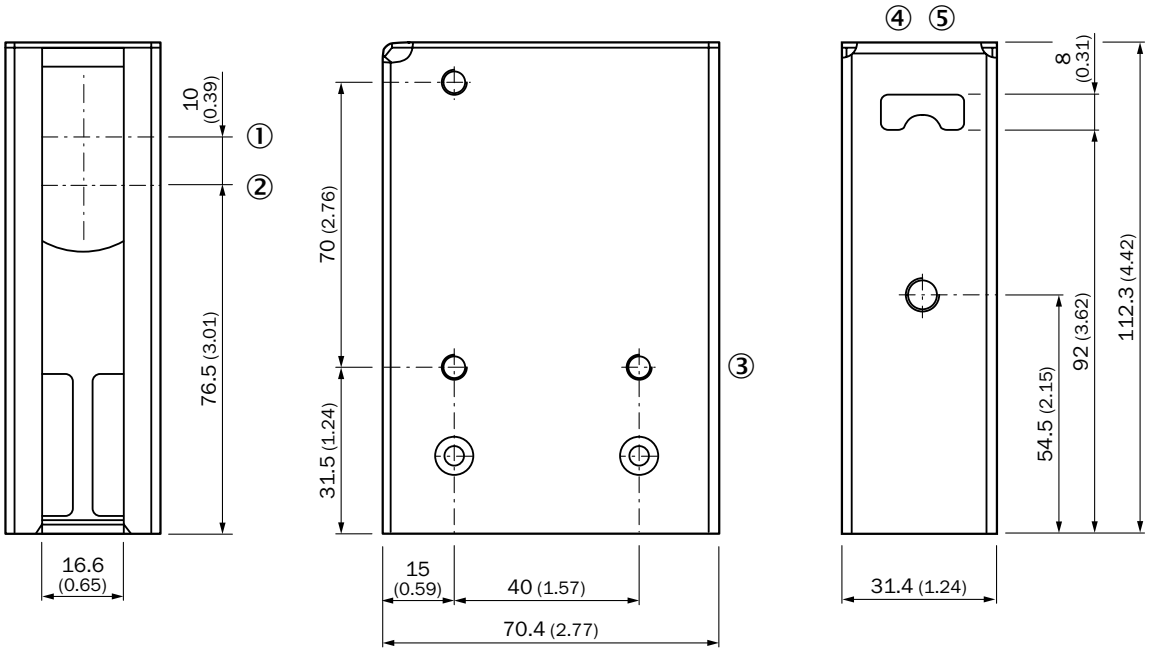

① Optical axis, sender
② Optical axis, receiver
③ Mounting hole ø 5.2 mm
④ Status indicator LED green: power on
⑤ Status indicator LED, yellow: Status of received light beam

Adjustments

WTB27-3 Ex

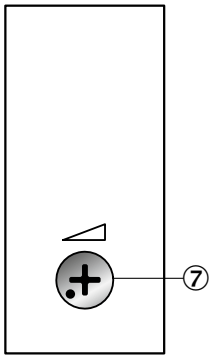

⑦ Sensing range adjustment: potentiometer

WL27-3 Ex

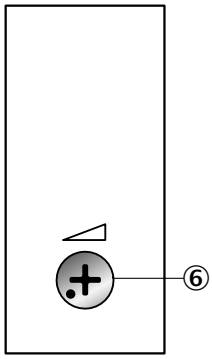

⑥ Sensitivity adjustment: potentiometer

H

Characteristic curves

Black-white shift

WTB27-3 EX

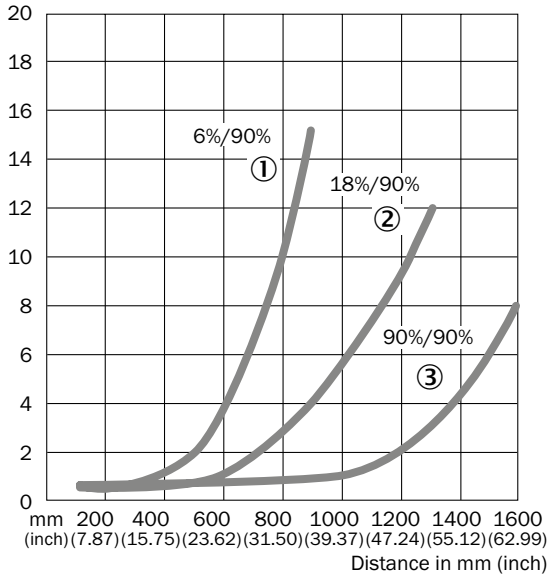

① Sensing range on black, 6 % remission
② Sensing range on gray, 18 % remission
③ Sensing range on white, 90 % remission

Operating reserve

WL27-3 EX

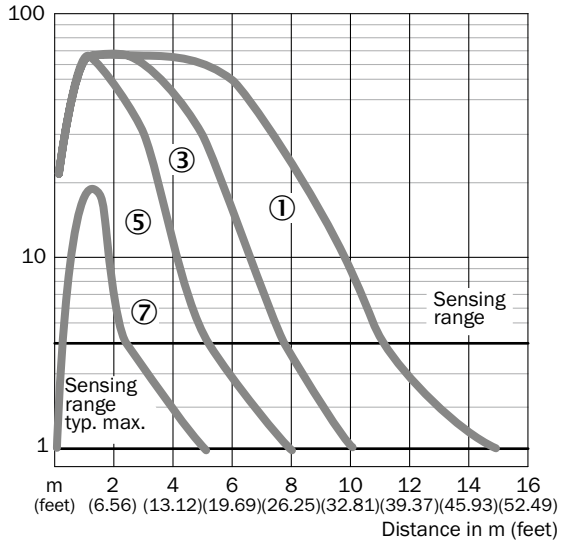

① PL80A
③ PL40A
⑤ PL20A
⑦ Reflective tape Diamond Grade

WSE27-3 EX

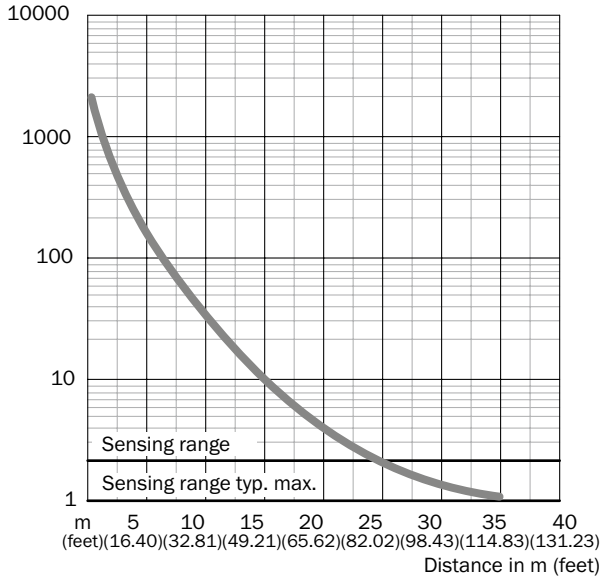

H

Bar diagrams

WTB27-3 EX

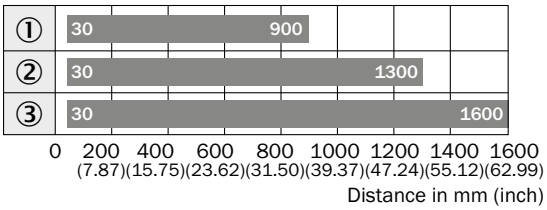

Sensing range

① Sensing range on black, 6 % remission
② Sensing range on gray, 18 % remission
③ Sensing range on white, 90 % remission

WL27-3 EX

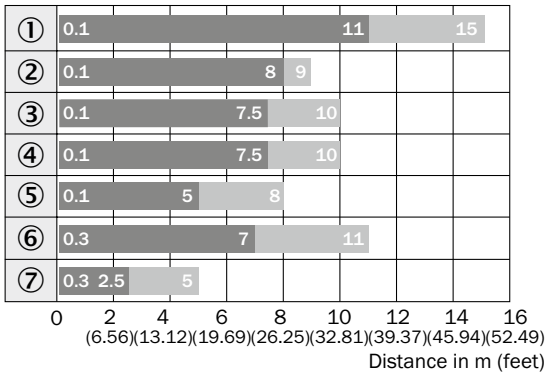

Sensing range Sensing range max.

① PL80A
② PL50A
③ PL40A
④ PL30A
⑤ PL20A
⑥ C110A
⑦ Reflective tape Diamond Grade

WSE27-3 Ex

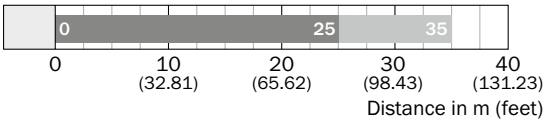

Sensing range Sensing range typ. max.

Connection diagram

Cd-088

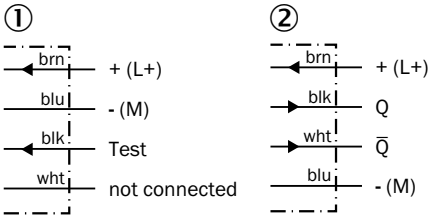

① Sender
② Receiver

Cd-094

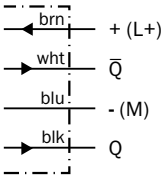

Recommended accessories

Mounting brackets/plates

Mounting brackets

Figure	Material	Description	Model name	Part no.
	Steel, zinc coated	Mounting bracket with hinged arm	BEF-WN-MULTI	2064469
			BEF-WN-W27	2009122

Universal bar clamp systems

Figure	Material	Description	Model name	Part no.
	Zinc plated steel (sheet), Diecast zinc (clamp)	Plate N04 for universal clamp bracket	BEF-KHS-N04	2051610

Device protection (mechanical)

Protective housing/tubes

Figure	Material	Description	Model name	Part no.
	Zinc plated steel (protective housing), Diecast zinc (clamp)	Protective housing for universal clamp	BEF-SG-W27	2039601
	Steel, zinc coated	Weather hood for universal clamp bracket	OBW-KHS-M01	2023240

Reflectors

Angular

Figure	Material	Description	Model name	Part no.
	PMMA/ABS	Rectangular, screw connection, 47 mm x 47 mm	P250	5304812
		Rectangular, screw connection, 38 mm x 15 mm	PL20A	1012719
		Rectangular, screw connection, 56 mm x 28 mm	PL30A	1002314
		Rectangular, screw connection, 37 mm x 56 mm	PL40A	1012720
		Rectangular, screw connection, 80 mm x 80 mm	PL80A	1003865

Reflective tape

Figure	Description	Model name	Part no.
	Self-adhesive, 50 mm x 60 mm	REF-IRF-56	5314244

Round

Figure	Material	Description	Model name	Part no.
	PMMA/ABS	Round, screw connection	C110A	5304549

→ **For additional accessories, please see page L-861**

H

High performance in a compact housing with universal AC/DC voltage

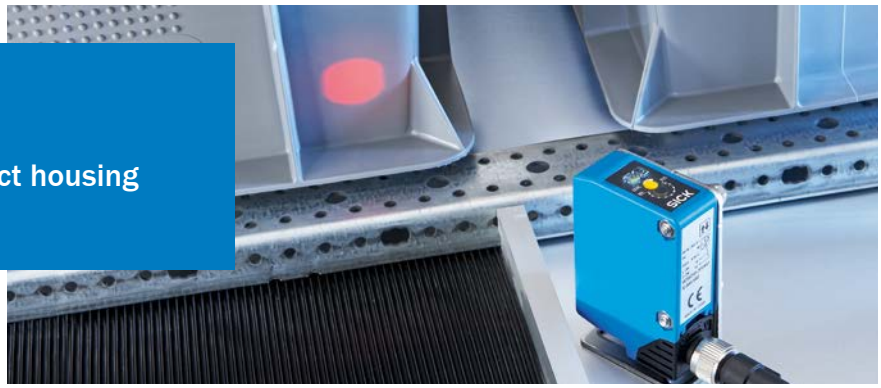

AC/DC

Product description

The W250 family integrates both DC and universal AC/DC versions into one compact housing. Both cable and rotatable M12 connector versions enhance this sensor's integration flexibility. In addition, an easy-to-read sensing range indicator aids users during adjustment. Operating mode (light/dark) is selectable via a control cable, which reduces the number of device variants.

At a glance

- Highly visible red light spot thanks to the Bright Light LED
- Potentiometer for adjusting sening range
- Operating mode (light/dark) selectable via control wire
- Cable or rotatable M12 connector
- Versions for 10 – 30 V DC or 24 – 240 V DC/ 24 – 240 V AC voltage supply in compact design
- Stainless steel mounting bracket BEF-W250 included in delivery

Your benefits

- Mounting bracket is included to ease installation
- Visible red Bright Light LED for simpler alignment of the sensors
- Cable or rotatable M12 connector provide installation flexibility
- Operating mode (light/dark) is selectable via a control cable to reduce the number of device variants
- Variants with DC voltage and universal AC/DC voltage in the same housing provide increased flexibility

H

CE

Additional information

→ **www.mysick.com/en/W250-2**

For more information, just enter the link or scan the QR code and get direct access to technical data, CAD design models, operating instructions, software, application examples and much more.

Detailed technical data

Features

	DC			AC/DC		
	WTB250-2	WL250-2	WSE250-2	WTB250-2	WL250-2	WSE250-2
Sensor principle	Photoelectric proximity sensor	Photoelectric retro-reflective sensor	Through-beam photoelectric sensor	Photoelectric proximity sensor	Photoelectric retro-reflective sensor	Through-beam photoelectric sensor
Detection principle	Background suppression	Standard optics	–	Background suppression	Standard optics	–
Dimensions (W x H x D)	20 mm x 65 mm x 43.9 mm					
Housing design (light emission)	Rectangular					
Sensing range max.	100 mm ... 1,000 mm [1] (depending on type)	0.01 m ... 15 m [2]	0 m ... 50 m	100 mm ... 1,000 mm [1] (depending on type)	0.01 m ... 15 m [2]	0 m ... 50 m
Sensing range	100 mm ... 1,000 mm [1] (depending on type)	0.01 m ... 13 m [2]	0 m ... 40 m	100 mm ... 1,000 mm [1] (depending on type)	0.01 m ... 13 m [2]	0 m ... 40 m
Type of light	Visible red light					
Light source [3]	BrightLight LED					
Angle of dispersion	Approx. 3°	Approx. 2°		Approx. 3°	Approx. 2°	
Adjustment [4]	Potentiometer, 2 turns					

[1] Object with 90 % reflectance (referred to standard white, DIN 5033)
[2] PL80A.
[3] Average service life of 100,000 h at T_A = +25 °C.
[4] With position indicator.

Mechanics/electronics

	DC			AC/DC		
	WTB250-2	WL250-2	WSE250-2	WTB250-2	WL250-2	WSE250-2
Supply voltage	10 V DC ... 30 V DC [1]			24 V DC ... 240 V DC [2] 24 V AC/DC ... 240 V AC/DC [2]		
Ripple [3]	≤ 5 V_{pp}			–		
Current consumption	≤ 35 mA	≤ 20 mA	–	–		
Current consumption, sender	–		20 mA [3]	–		
Current consumption, receiver	–		20 mA [3]	–		
Power consumption	–			≤ 5 VA		–
Power consumption, sender	–					≤ 3,5 VA
Power consumption, receiver	–					≤ 3,5 VA
Output type	PNP, open collector/NPN, open collector (depending on type)			Relay, electrically isolated [5]		
Output function	–			Change-over contacts		
Switching mode	Light/dark-switching/Light switching (Selectable via L/D control wire)			Light switching [5]		
Output current $I_{max.}$	≤ 100 mA			–		
Switching current (switching voltage)	–			3 A (240 V AC)/3 A (30 V DC)		
Response time	≤ 3 ms [6]			≤ 15 ms		
Switching frequency [7]	160 Hz	1,000 Hz		33 Hz		
Angle of reception	–		20°	–		20°
Connection type	Cable [8]/Male connector, M12 [9] (depending on type)			Cable [8]		
Circuit protection	A [10], B [11], C [12], D [13]			A [10], C [12]		

H

	DC			AC/DC		
	WTB250-2	WL250-2	WSE250-2	WTB250-2	WL250-2	WSE250-2
Protection class	III			II [14]		
Overvoltage category	–			2		
Weight						
Cable	150 g		300 g	330 g		660 g
Connector	40 g		80 g	–		
Polarisation filter	–	✔	–		✔	–
Housing material	ABS					
Optics material	PMMA					
Enclosure rating	IP 67					
Items supplied	BEF-W250 mounting bracket	Reflector P250, BEF-W250 mounting bracket	BEF-W250 mounting bracket		Reflector P250, BEF-W250 mounting bracket	BEF-W250 mounting bracket
Usage category	–			AC-15, DC-13, according to EN 60947-1		
EMC [15]	EN 60947-5-2					
Ambient operating temperature	–25 °C ... +55 °C					
Ambient storage temperature	–40 °C ... +70 °C					

[1] Limit values, operation in short-circuit protected network max. 8 A.
[2] ±10 %.
[3] May not exceed or fall short of V_S tolerances.
[4] Without load.
[5] Provide suitable spark suppression for inductive or capacitive loads.
[6] Signal transit time with resistive load.
[7] With light/dark ratio 1:1.
[8] Do not bend below 0 °C.
[9] 90 ° rotatable.
[10] A = V_S connections reverse-polarity protected.
[11] B = inputs and output reverse-polarity protected.
[12] C = interference suppression.
[13] D = outputs overcurrent and short-circuit protected.
[14] Reference voltage: 250 V AC.
[15] The AC/DC devices meet the interference suppression requirements for industrial use (interference suppression class A). When used in residential areas it can cause interference.

Ordering information

Other models available at www.mysick.com/en/W250-2

H

WTB250-2, DC

- **Sensor principle:** photoelectric proximity sensor

Sensing range max. [1]	Light spot size (distance)	Output type	Switching mode	Connection	Connection diagram	Model name	Part no.
100 mm ... 300 mm	Ø 30 mm (300 mm)	PNP	Light/dark-switching	Cable, 4-wire, 2 m, PVC	Cd-089	WTB250-2P1131	6044674
				Connector M12, 4-pin	Cd-087	WTB250-2P2431	6044675
		NPN	Light/dark-switching	Cable, 4-wire, 2 m, PVC	Cd-089	WTB250-2N1131	6044672
				Connector M12, 4-pin	Cd-087	WTB250-2N2431	6044673
150 mm ... 500 mm	Ø 30 mm (500 mm)	PNP	Light/dark-switching	Cable, 4-wire, 2 m, PVC	Cd-089	WTB250-2P1141	6044680
				Cable, 4-wire, 5 m, PVC	Cd-089	WTB250-2P1241	6044681
				Connector M12, 4-pin	Cd-087	WTB250-2P2441	6044682
			Light switching	Connector M12, 4-pin	Cd-066	WTB250-2F2441	6044685
		NPN	Light/dark-switching	Cable, 4-wire, 2 m, PVC	Cd-089	WTB250-2N1141	6044678
				Connector M12, 4-pin	Cd-087	WTB250-2N2441	6044679

[1] Object with 90 % reflectance (referred to standard white, DIN 5033)

Sensing range max. [1]	Light spot size (distance)	Output type	Switching mode	Connection	Connection diagram	Model name	Part no.
200 mm ... 1,000 mm	Ø 35 mm (1,000 mm)	PNP	Light/dark-switching	Cable, 4-wire, 2 m, PVC	Cd-089	WTB250-2P1151	6044690
				Cable, 4-wire, 5 m, PVC	Cd-089	WTB250-2P1251	6044691
				Connector M12, 4-pin	Cd-087	WTB250-2P2451	6044692
		NPN	Light/dark-switching	Cable, 4-wire, 2 m, PVC	Cd-089	WTB250-2N1151	6044686
				Cable, 5-wire, 5 m, PVC	Cd-089	WTB250-2N1251	6044687
				Connector M12, 4-pin	Cd-087	WTB250-2N2451	6044689

[1] Object with 90 % reflectance (referred to standard white, DIN 5033)

WL250-2, DC

- **Sensor principle:** photoelectric retro-reflective sensor

Sensing range max.	Light spot size (distance)	Output type	Switching mode	Connection	Connection diagram	Model name	Part no.
0.01 m ... 15 m [1] 0.01 m ... 12 m [2]	Ø 260 mm (8 m)	PNP	Light/dark-switching	Cable, 4-wire, 2 m, PVC	Cd-089	WL250-2P1131	6044697
				Cable, 4-wire, 5 m, PVC	Cd-089	WL250-2P1231	6044698
				Connector M12, 4-pin	Cd-087	WL250-2P2431	6044699
			Light switching	Connector M12, 4-pin	Cd-067	WL250-2F2431	6044702
		NPN	Light/dark-switching	Cable, 4-wire, 2 m, PVC	Cd-089	WL250-2N1131	6044695
				Connector M12, 4-pin	Cd-087	WL250-2N2431	6044696

[1] PL80A.
[2] P250.

WSE250-2, DC

- **Sensor principle:** through-beam photoelectric sensor

Sensing range max.	Light spot size (distance)	Output type	Switching mode	Connection	Connection diagram	Model name	Part no.
0 m ... 50 m	Ø 0.6 m (20 m)	PNP	Light/dark-switching	Cable, 4-wire, 2 m, PVC	Cd-058	WSE250-2P1131	6044703
				Cable, 4-wire, 5 m, PVC	Cd-058	WSE250-2P1231	6044704
				Connector M12, 4-pin	Cd-060	WSE250-2P2431	6044705
			Light switching	Connector M12, 4-pin	Cd-071	WSE250-2F2431	6044706
		NPN	Light/dark-switching	Cable, 4-wire, 2 m, PVC	Cd-058	WSE250-2N1131	6044709
				Connector M12, 4-pin	Cd-060	WSE250-2N2431	6044711

H

WTB250-2, AC/DC

- **Sensor principle:** photoelectric proximity sensor

Sensing range max. [1]	Light spot size (distance)	Output type	Switching mode [2]	Connection	Connection diagram	Model name	Part no.
100 mm ... 300 mm	Ø 30 mm (300 mm)	Relay	Light switching	Cable, 5-wire, 2 m, PVC	Cd-163	WTB250-2R1531	6044676
				Cable, 5-wire, 5 m, PVC	Cd-163	WTB250-2R1631	6044677
150 mm ... 500 mm	Ø 30 mm (500 mm)	Relay	Light switching	Cable, 5-wire, 2 m, PVC	Cd-163	WTB250-2R1541	6044683
				Cable, 5-wire, 5 m, PVC	Cd-163	WTB250-2R1641	6044684
200 mm ... 1,000 mm	Ø 35 mm (1,000 mm)	Relay	Light switching	Cable, 5-wire, 2 m, PVC	Cd-163	WTB250-2R1551	6044693
				Cable, 5-wire, 5 m, PVC	Cd-163	WTB250-2R1651	6044694

[1] Object with 90 % reflectance (referred to standard white, DIN 5033)
[2] Provide suitable spark suppression for inductive or capacitive loads.

WL250-2, AC/DC

- **Sensor principle:** photoelectric retro-reflective sensor

Sensing range max.	Light spot size (distance)	Output type	Switching mode [2]	Connection	Connection diagram	Model name	Part no.
0.01 m ... 15 m [1] 0.01 m ... 12 m [2]	Ø 260 mm (8 m)	Relay	Light switching	Cable, 5-wire, 2 m, PVC	Cd-229	WL250-2R1531	6044700
				Cable, 5-wire, 5 m, PVC	Cd-229	WL250-2R1631	6044701

[1] PL80A.
[2] P250.
[2] Provide suitable spark suppression for inductive or capacitive loads.

WSE250-2, AC/DC

- **Sensor principle:** through-beam photoelectric sensor

Sensing range max.	Light spot size (distance)	Output type	Switching mode [2]	Connection	Connection diagram	Model name	Part no.
0 m ... 50 m	Ø 0.6 m (20 m)	Relay	Light switching	Cable, 5-wire, 2 m, PVC	Cd-228	WSE250-2R1531	6044707
				Cable, 5-wire, 5 m, PVC	Cd-228	WSE250-2R1631	6044708

[2] Provide suitable spark suppression for inductive or capacitive loads.

Dimensional drawings

Dimensions in mm (inch)

WTB250-2, DC, cable

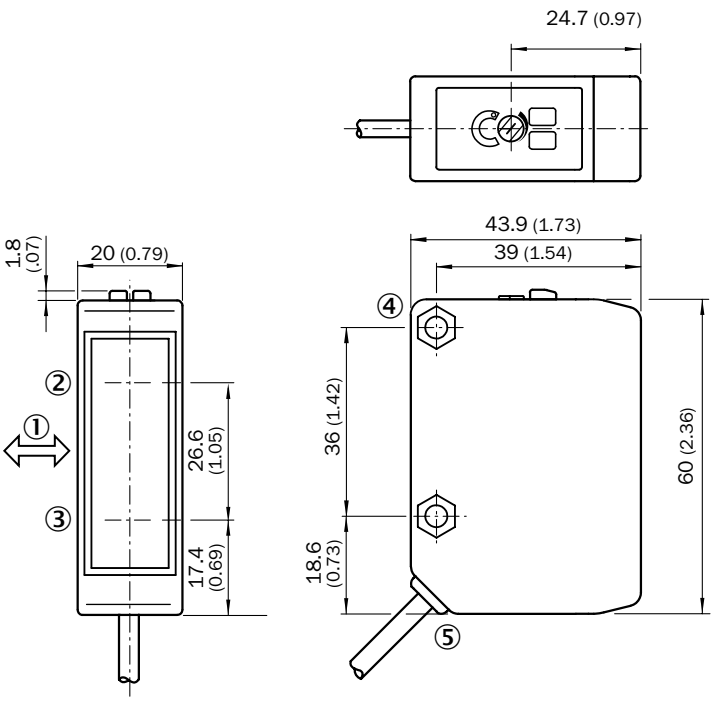

① Standard direction of the material being detected
② Axis of sender
③ Axis of receiver
④ Mounting hole ø 4.2 mm, for M4 hexagon nut on both sides
⑤ Connection cable

H

WTB250-2, DC, connector

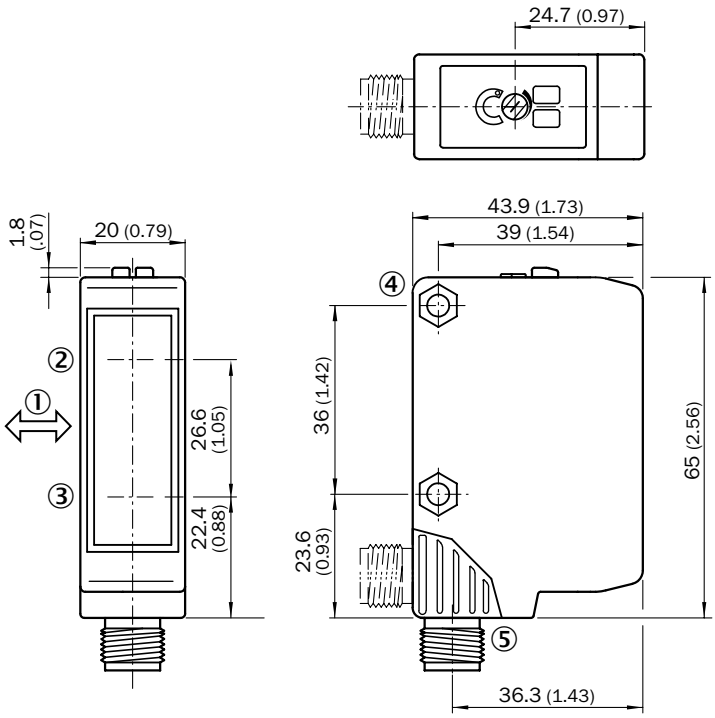

① Standard direction of the material being detected
② Axis of sender
③ Axis of receiver
④ Mounting hole ø 4.2 mm, for M4 hexagon nut on both sides
⑤ Connector M12, 4-pin: Connector position rotatable by 90° (V>H); V: Vertical final position; H: Horizontal final position, can be locked with slider

WL250-2, DC, cable

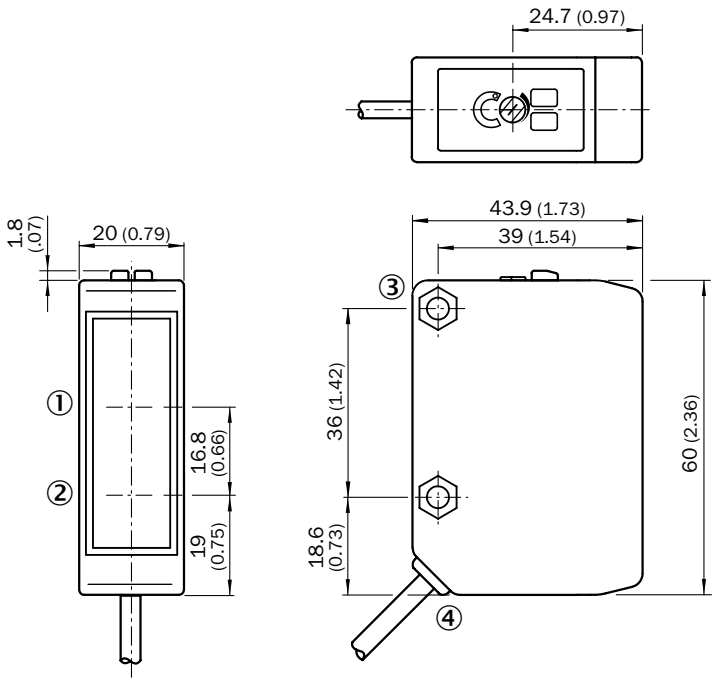

① Reception axis
② Axis of sender
③ Mounting hole ø 4.2 mm, for M4 hexagon nut on both sides
④ Connection cable

H

WL250-2, DC, connector

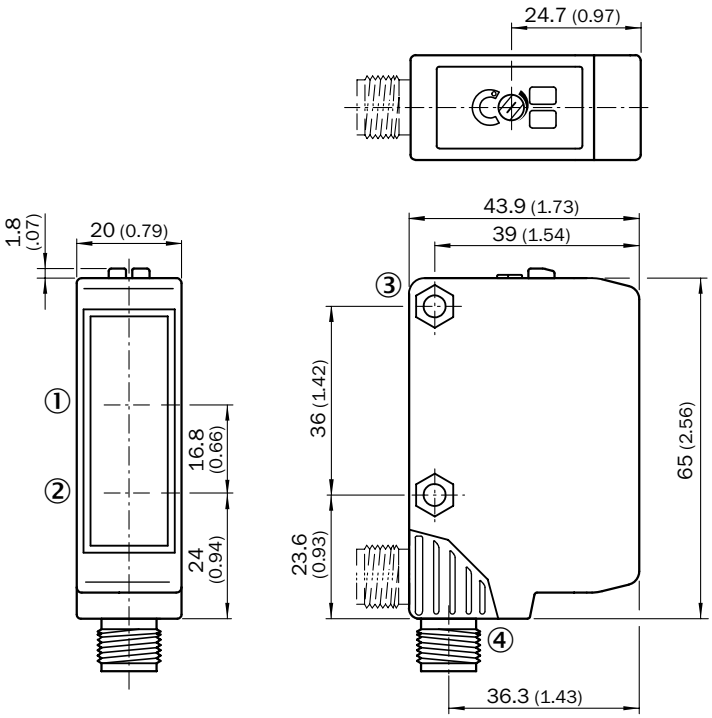

① Reception axis
② Axis of sender
③ Mounting hole ø 4.2 mm, for M4 hexagon nut on both sides
④ Connector M12, 4-pin: Connector position rotatable by 90° (V>H); V: Vertical final position; H: Horizontal final position, can be locked with slider

WSE250-2, DC, cable

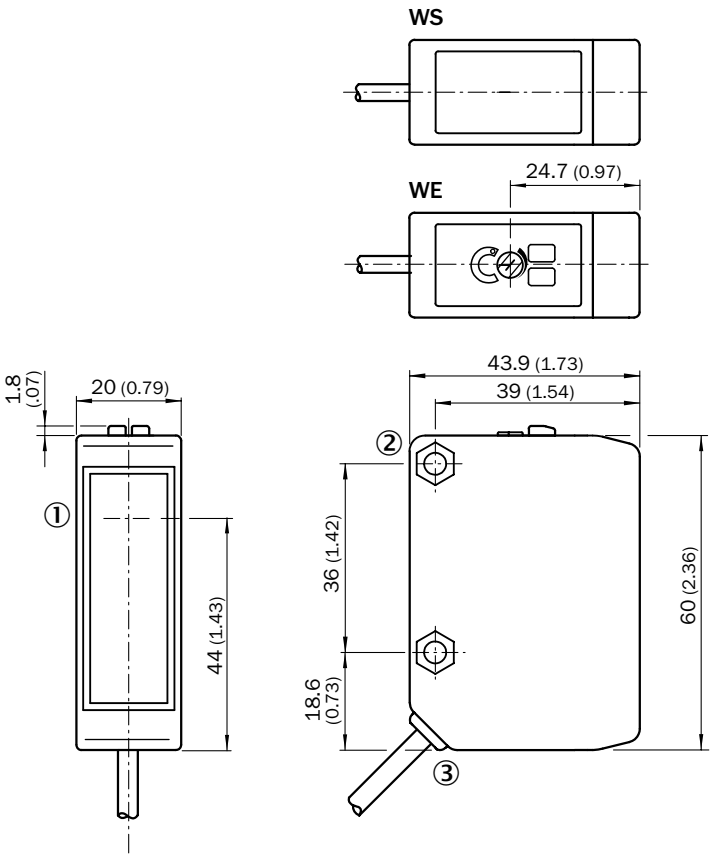

① Center of the optical axis, sender (WS 250), receiver (WE 250)
② Mounting hole ø 4.2 mm, for M4 hexagon nut on both sides
③ Connection cable

H

WSE250-2, DC, connector

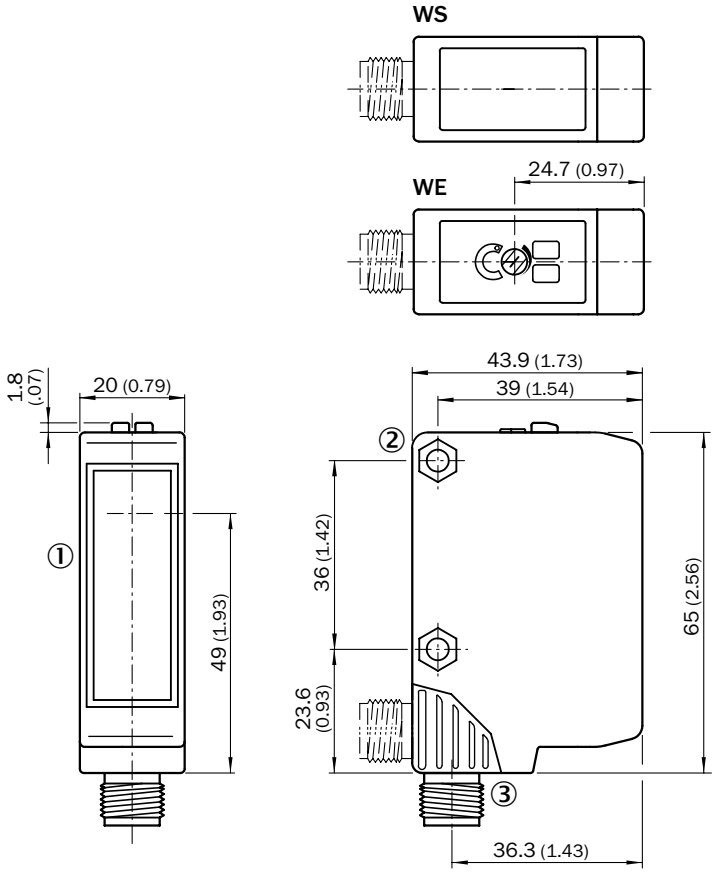

① Center of the optical axis, sender (WS 250), receiver (WE 250)
② Mounting hole ø 4.2 mm, for M4 hexagon nut on both sides
③ Connector M12, 4-pin: Connector position rotatable by 90° (V>H); V: Vertical final position; H: Horizontal final position, can be locked with slider

WTB250-2, AC/DC, cable

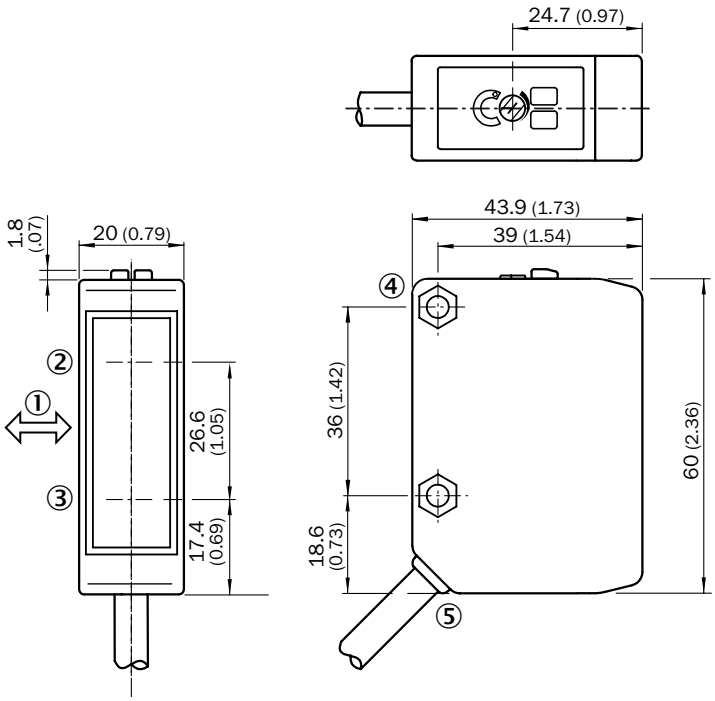

① Standard direction of the material being detected
② Axis of sender
③ Axis of receiver
④ Mounting hole ø 4.2 mm, for M4 hexagon nut on both sides
⑤ Connection cable

H

WL250-2, AC/DC, cable

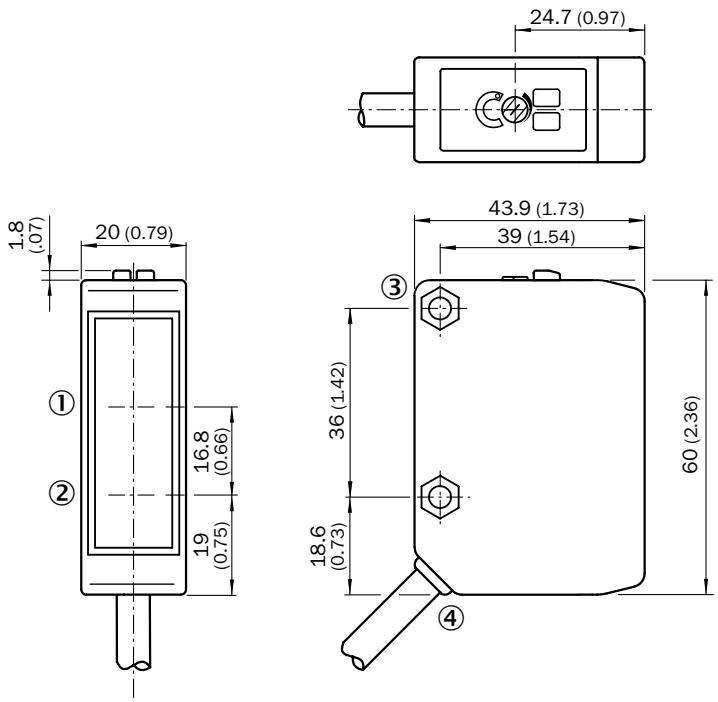

① Reception axis
② Axis of sender
③ Mounting hole ø 4.2 mm, for M4 hexagon nut on both sides
④ Connection cable

WSE250-2, AC/DC, cable

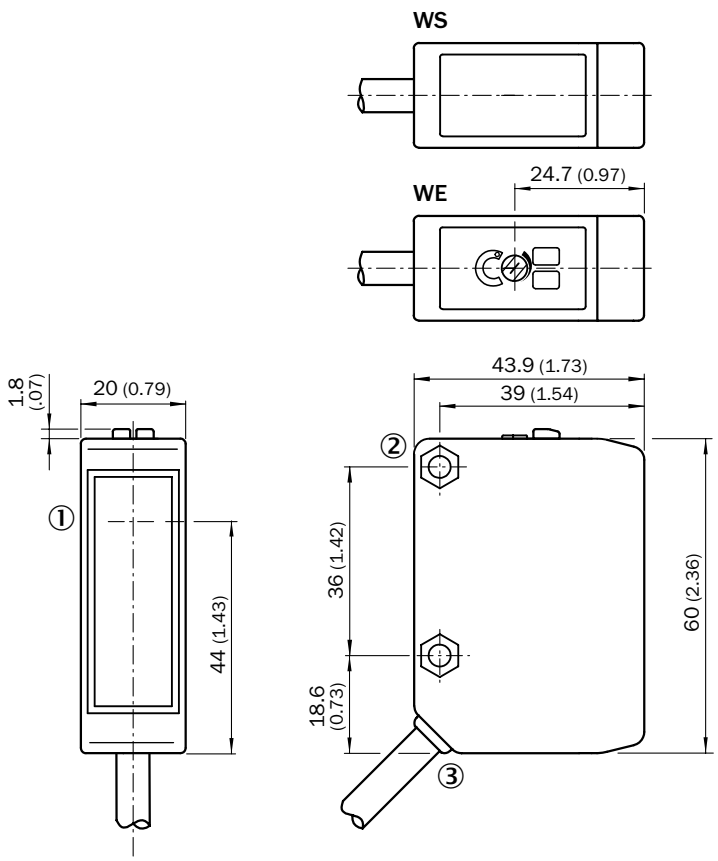

① Center of the optical axis, sender (WS 250), receiver (WE 250)
② Mounting hole ø 4.2 mm, for M4 hexagon nut on both sides
③ Connection cable

H

Adjustments

WTB250-2

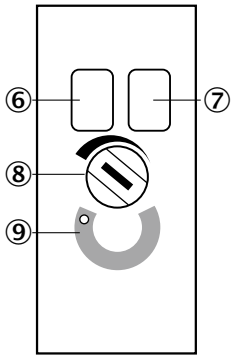

⑥ LED indicator green: Stability indicator
⑦ Status indicator LED, yellow:
Status of received light beam
⑧ Sensing range adjustment: potentiometer
⑨ Position indicator for sensitivity setting (270°)

WL250-2, WSE250-2, Sender

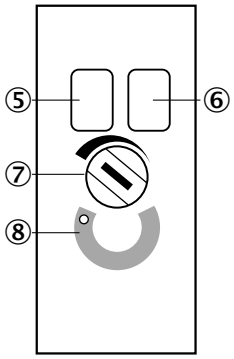

⑤ LED indicator green: Stability indicator
⑥ Status indicator LED, yellow:
Status of received light beam
⑦ Sensitivity adjustment: potentiometer
⑧ Position indicator for sensitivity setting (270°)

Characteristic curves

Black-white shift

WTB250-2, 300 mm

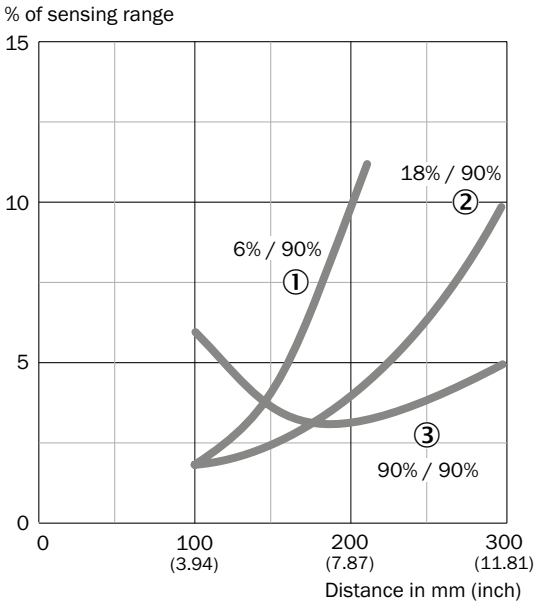

① Sensing range on black, background white
② Sensing range on gray, background white
③ Sensing range on white, background white

WTB250-2, 500 mm

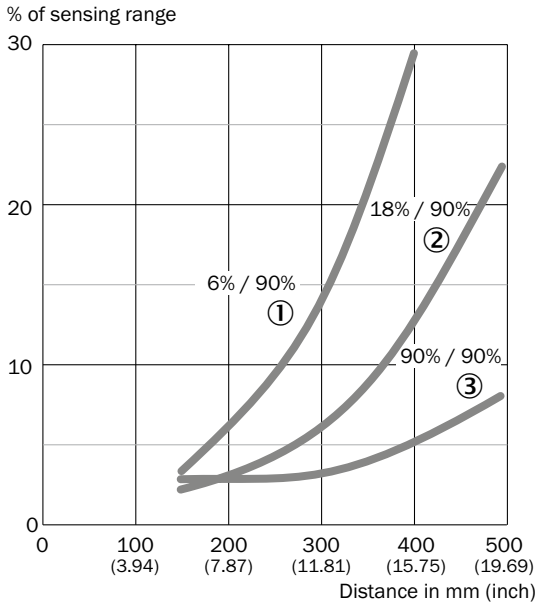

① Sensing range on black, background white
② Sensing range on gray, background white
③ Sensing range on white, background white

H

WTB250-2, 1000 mm

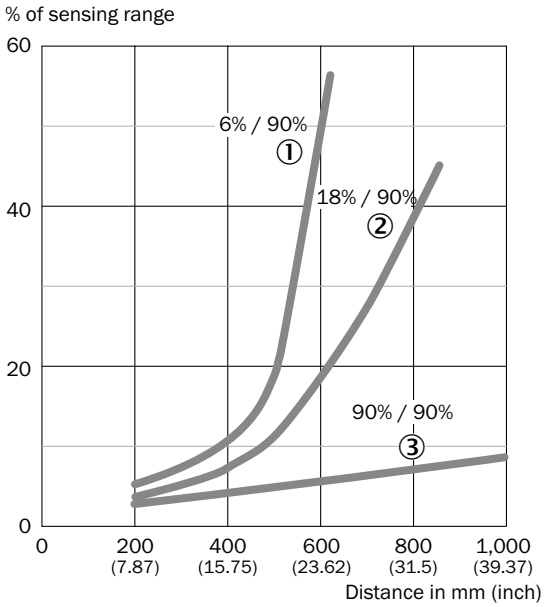

① Sensing range on black, background white
② Sensing range on gray, background white
③ Sensing range on white, background white

Operating reserve

WL250-2

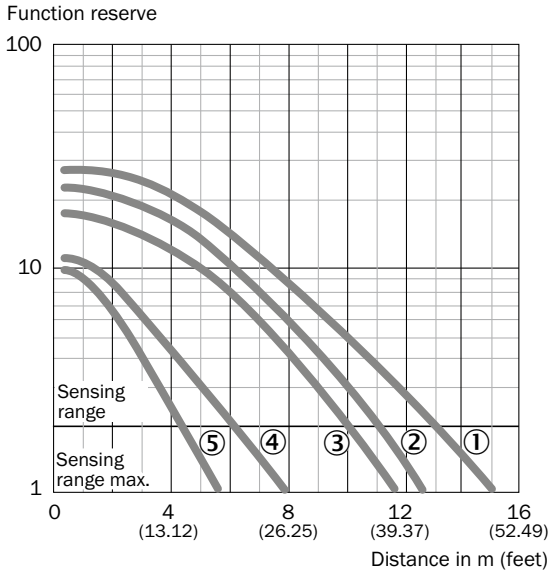

WSE250-2

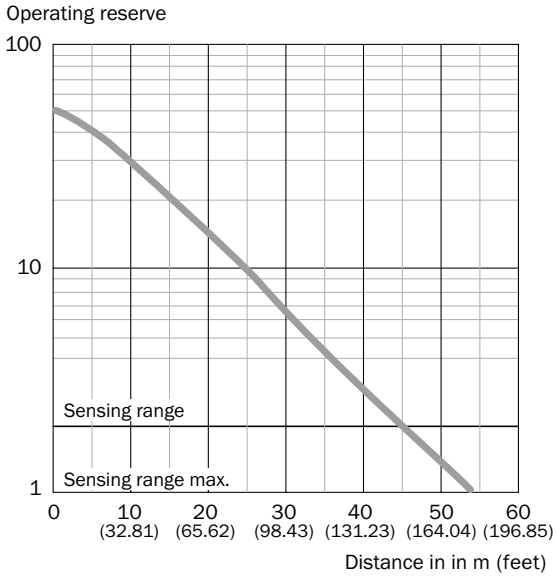

① Reflector type PL80A, C110A
② Reflector type P205
③ Reflector type PL50A, PL40A, PL30A, PL31A
④ Reflector type PL20A
⑤ Reflective tape Diamond Grade (100 mm x 100 mm/3.94 inch x 3.94 inch)

H

Bar diagrams

WTB250-2, 300 mm

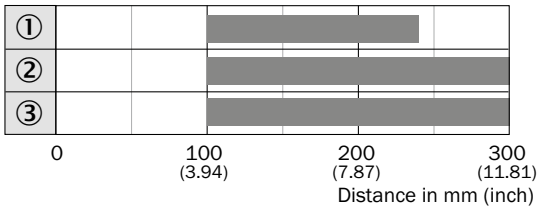

Sensing range

① Sensing range on black, background white
② Sensing range on gray, background white
③ Sensing range on white, background white

WTB250-2, 500 mm

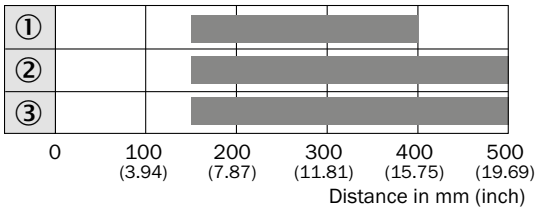

Sensing range

① Sensing range on black, background white
② Sensing range on gray, background white
③ Sensing range on white, background white

WTB250-2, 1000 mm

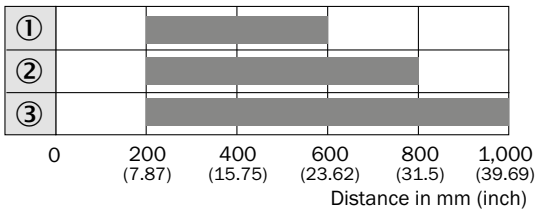

Sensing range

① Sensing range on black, background white
② Sensing range on gray, background white
③ Sensing range on white, background white

WL250-2

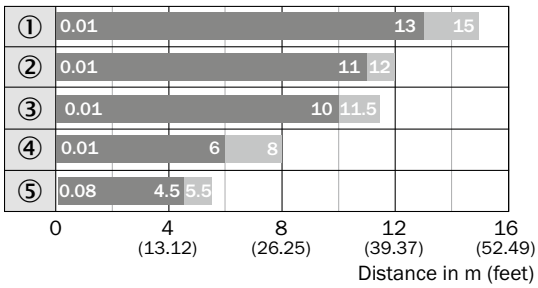

Sensing range Sensing range max.

① Reflector type PL80A, C110A
② Reflector type P205
③ Reflector type PL50A, PL40A, PL30A, PL31A
④ Reflector type PL20A
⑤ Reflective tape Diamond Grade (100 mm x 100 mm/3.94 inch x 3.94 inch)

WSE250-2

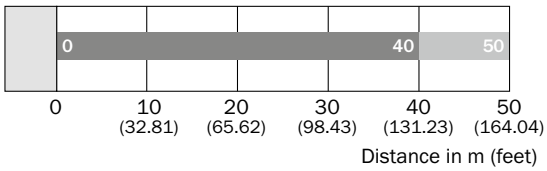

Sensing range Sensing range max.

Connection diagram

Cd-058

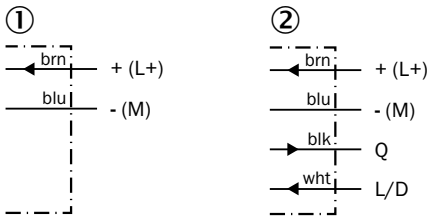

① Sender
② Receiver

Cd-060

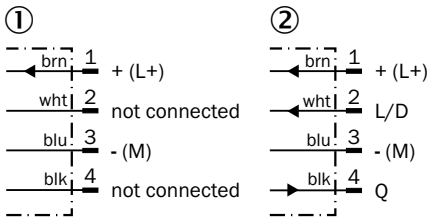

① Sender
② Receiver

H

Cd-066

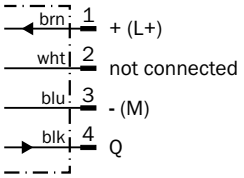

Cd-067

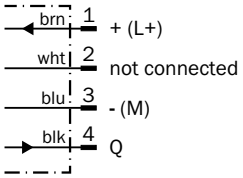

Cd-071

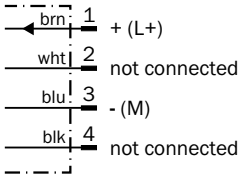

Cd-087

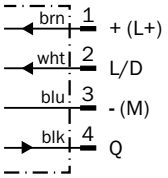

Cd-089

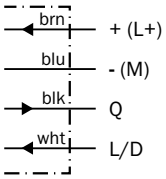

Cd-163

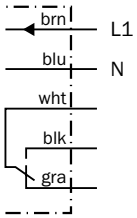

Cd-228

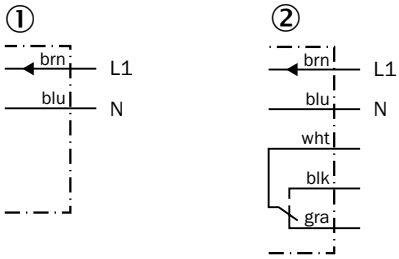

① Sender
② Receiver

Cd-229

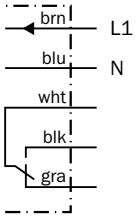

Recommended accessories

H

Mounting brackets/plates

Mounting brackets

Figure	Material	Description	Model name	Part no.
	Steel, zinc coated	Mounting bracket	BEF-W250	5305850

Plug connectors and cables

Connecting cable (female connector-open)

- **Cable material:** PVC

Figure	Connection type head A	Connection type head B	Connecting cable	Enclosure rating	Model name	Part no.
	Female connector, M12, 4-pin, straight	Cable, open conductor heads	2 m, 4-wire	IP 67	DOL-1204-G02M	6009382
			5 m, 4-wire	IP 67	DOL-1204-G05M	6009866
			10 m, 4-wire	IP 67	DOL-1204-G10M	6010543
	Female connector, M12, 4-pin, angled	Cable, open conductor heads	2 m, 4-wire	IP 67	DOL-1204-W02M	6009383
			5 m, 4-wire	IP 67	DOL-1204-W05M	6009867
			10 m, 4-wire	IP 67	DOL-1204-W10M	6010541

Female connector (ready to assemble)

Figure	Connection type head A	Connection type head B	Connector material	Enclosure rating	Model name	Part no.
	Female connector, M12, 4-pin, straight	Screw-type terminals	PBT	IP 67	DOS-1204-G	6007302
	Female connector, M12, 4-pin, angled	Screw-type terminals	PBT	IP 67	DOS-1204-W	6007303

Universal bar clamp systems

Figure	Material	Description	Model name	Part no.
	Zinc plated steel (sheet), Diecast zinc (clamp)	Plate N02 for universal clamp bracket	BEF-KHS-N02	2051608

Reflectors

Angular

Figure	Material	Description	Model name	Part no.
	PMMA/ABS	Rectangular, screw connection, 47 mm x 47 mm	P250	5304812
		Rectangular, screw connection, 38 mm x 15 mm	PL20A	1012719
		Rectangular, screw connection, 56 mm x 28 mm	PL30A	1002314
		Rectangular, screw connection, 37 mm x 56 mm	PL40A	1012720
		Rectangular, screw connection, 80 mm x 80 mm	PL80A	1003865

Reflective tape

Figure	Description	Model name	Part no.
	Self-adhesive, 50 mm x 60 mm	REF-IRF-56	5314244

Round

Figure	Material	Description	Model name	Part no.
	PMMA/ABS	Round, screw connection	C110A	5304549

→ **For additional accessories, please see page L-861**

H

Sensor kit with mounting bracket and reflector

AC/DC

Product description

The W280-2 consists of three high-performance sensor types – energetic photoelectric proximity sensor, photoelectric retro-reflective sensor and through-beam photoelectric sensor. The AC/DC devices (-2Hxxxx) are compliant with EN 61000-6-3 (electromagnetic interference for “residential, commercial and light-industrial environments”) which makes the sensor especially suitable for door and gates areas. In other branches the fast install kit provides a rotatable M12 connector, cable or screw terminal connection which offer a quick and easy setup even in space-restricted conditions. Devices with potentiometer and light/dark switching provide application flexibility. In addition, these sensors are available in DC and AC/DC versions.

At a glance

- Highly visible red light spot thanks to the BrightLight LED
- Potentiometer for adjusting sensing range
- Light/dark switching (DC devices only)
- Rotatable connector, cable connection or terminal chamber
- Versions for 10 – 30 V DC or 24 – 240 V DC/AC voltage supply
- AC/DC (-2Hxxxx) devices are compliant with EN61000-6-3 (electromagnetic interference for “residential, commercial and light-industrial environments”)
- Stainless steel mounting bracket and P250 reflector (for WL280 only) are included in delivery

Your benefits

- Simple and fast commissioning with the highly visible light spot of the BrightLight LED
- Simple operation via potentiometer
- Light/dark switching provides application flexibility
- All necessary mounting and operating accessories are included in delivery, enabling quick and easy setup: since mounting bracket (stainless steel 1.4301) is included in delivery scope
- DC devices and AC/DC devices available in the same housing, allowing electrical flexibility
- Less contamination due to high operating reserves, reducing downtime

Additional information

→ **www.mysick.com/en/W280-2**

For more information, just enter the link or scan the QR code and get direct access to technical data, CAD design models, operating instructions, software, application examples and much more.

H

Detailed technical data

Features

	DC			AC/DC		
	WTE280-2	WL280-2	WSE280-2	WTE280-2	WL280-2	WSE280-2
Sensor principle	Photoelectric proximity sensor	Photoelectric retro-reflective sensor	Through-beam photoelectric sensor	Photoelectric proximity sensor	Photoelectric retro-reflective sensor	Through-beam photoelectric sensor
Detection principle	Energetic	Standard optics	–	Energetic	Standard optics	–
Dimensions (W x H x D)	23.5 mm x 74.5 mm x 63 mm					
Housing design (light emission)	Rectangular					
Sensing range max.	10 mm ... 2,000 mm [1]	0.01 m ... 15 m [2]	0 m ... 60 m	10 mm ... 2,000 mm [1]	0.01 m ... 15 m [2]	0 m ... 60 m
Sensing range	10 mm ... 1,500 mm	0.01 m ... 13 m [2]	0 m ... 50 m	10 mm ... 1,500 mm	0.01 m ... 13 m [2]	0 m ... 50 m
Type of light	Visible red light					
Light source [3]	BrightLight LED					
Adjustment	Potentiometer					

[1] Object with 90 % reflectance (referred to standard white, DIN 5033)

[2] PL80A.

[3] Average service life of 100,000 h at T_A = +25 °C.

Mechanics/electronics

	DC			AC/DC		
	WTE280-2	WL280-2	WSE280-2	WTE280-2	WL280-2	WSE280-2
Supply voltage	10 V DC ... 30 V DC [1]			24 V DC ... 240 V DC [2] 24 V AC ... 240 V AC [2]		
Ripple [3]	≤ 5 V_{pp}		≤ 5 V_{pp}	–		
Current consumption	≤ 20 mA		–			
Current consumption, sender	–		≤ 20 mA	–		
Current consumption, receiver	–		≤ 20 mA [4]	–		
Power consumption	–			≤ 5 VA		–
Power consumption, sender	–					≤ 3,5 VA
Power consumption, receiver	–					≤ 3,5 VA
Output type	PNP, open collector/NPN, open collector (depending on type)			Relay, electrically isolated [5]		
Output function	–			Change-over contacts		
Switching mode	Light/dark-switching (selectable via light/dark rotary switch)			Light switching [5]		
Output current $I_{max.}$	100 mA			–		
Switching current (switching voltage)	–			3 A (240 V AC)/3 A (30 V DC)		
Response time	≤ 0.5 ms [6]			≤ 15 ms		
Switching frequency [7]	1,000 Hz			33 Hz		
Connection type	Cable [8]/Cable gland (depending on type)					
Circuit protection	A [9], B [10], C [11], D [12]			A [9], C [11]		
Protection class	III					II [13]
Overvoltage category	–			2/3 (depending on type)		
Weight	150 g		300 g	150 g		300 g
Polarisation filter	–	✔	–		✔	–
Interference emission	–			EN 61000-6-3 (only –2Hxxxx) [14]		
Housing material	ABS					

H

	DC			AC/DC		
	WTE280-2	WL280-2	WSE280-2	WTE280-2	WL280-2	WSE280-2
Optics material	PMMA					
Enclosure rating	IP 66, IP 67					
Items supplied	Mounting bracket BEF-W280	Mounting bracket BEF-W280, Reflector P250	Mounting bracket BEF-W280		Mounting bracket BEF-W280, Reflector P250	Mounting bracket BEF-W280
Usage category	–			AC-15, DC-13, according to EN 60947-1		
EMC [15]	EN 60947-5-2					
Ambient operating temperature	–25 °C ... +55 °C					
Ambient storage temperature	–40 °C ... +70 °C					

[1] Limit values, operation in short-circuit protected network max. 8 A.
[2] ±10 %.
[3] May not exceed or fall short of V_S tolerances.
[4] Without load.
[5] Provide suitable spark suppression for inductive or capacitive loads.
[6] Signal transit time with resistive load.
[7] With light/dark ratio 1:1.
[8] Do not bend below 0 °C.
[9] A = V_S connections reverse-polarity protected.
[10] B = inputs and output reverse-polarity protected.
[11] C = interference suppression.
[12] D = outputs overcurrent and short-circuit protected.
[13] Rated voltage: 250 V AC/DC.
[14] In the case of a DC supply (relating to EN 61000-6-3) the length of cable between the supply source and the sensor must be < 30 m.
[15] The AC/DC devices meet the interference suppression requirements for industrial use (interference suppression class A). When used in residential areas it can cause interference.

Ordering information

Other models available at www.mysick.com/en/W280-2

WTE280-2, DC

- **Sensor principle:** photoelectric proximity sensor
- **Switching mode:** light/dark-switching

Sensing range max. [1]	Light spot size (distance)	Output type	Connection	Connection diagram	Model name	Part no.
10 mm ... 2,000 mm	Ø 45 mm (1,500 mm)	PNP	Cable, 3-wire, 2 m	Cd-043	WTE280-2P1131	6044726
			Connector M12, 4-pin	Cd-068	WTE280-2P2431	6044728
			Cable gland	Cd-207	WTE280-2P4331	6044724
		NPN	Cable, 3-wire, 2 m	Cd-043	WTE280-2N1131	6044727
			Connector M12, 4-pin	Cd-068	WTE280-2N2431	6044729
			Cable gland	Cd-207	WTE280-2N4331	6044725

[1] Object with 90 % reflectance (referred to standard white, DIN 5033)

WL280-2, DC

- **Sensor principle:** photoelectric retro-reflective sensor
- **Switching mode:** light/dark-switching

Sensing range max.	Light spot size (distance)	Output type	Connection	Connection diagram	Model name	Part no.
0.01 m ... 15 m [1] 0.01 m ... 12 m [2]	Ø 260 mm (8 m)	PNP	Cable, 3-wire, 2 m	Cd-043	WL280-2P1131	6044734
			Connector M12, 4-pin	Cd-068	WL280-2P2431	6044736
			Cable gland	Cd-207	WL280-2P4331	6044732
		NPN	Cable, 3-wire, 2 m	Cd-043	WL280-2N1131	6044735
			Connector M12, 4-pin	Cd-068	WL280-2N2431	6044737
			Cable gland	Cd-207	WL280-2N4331	6044733

[1] PL80A.
[2] P250.

WSE280-2, DC

- **Sensor principle:** through-beam photoelectric sensor
- **Switching mode:** light/dark-switching

Sensing range max.	Light spot size (distance)	Output type	Connection	Connection diagram	Model name	Part no.
0 m ... 60 m	Ø 0.6 mm (20 m)	PNP	Cable, 3-wire, 2 m	Cd-049	WSE280-2P1131	6044743
			Connector M12, 4-pin	Cd-187	WSE280-2P2431	6044745
			Cable gland	Cd-190	WSE280-2P4331	6044741
		NPN	Cable, 3-wire, 2 m	Cd-049	WSE280-2N1131	6044744
			Connector M12, 4-pin	Cd-187	WSE280-2N2431	6044746
			Cable gland	Cd-190	WSE280-2N4331	6044742

WTE280-2, AC

- **Sensor principle:** photoelectric proximity sensor
- **Switching mode:** light switching (provide suitable spark suppression for inductive or capacitive loads.)

Sensing range max. [1]	Light spot size (distance)	Output type	Connection	Overvoltage category	Connection diagram	Model name	Part no.
10 mm ... 2,000 mm	Ø 45 mm (1,500 mm)	Relay	Cable, 5-wire, 2 m	2	Cd-229	WTE280-2H1531	6044731
				3	Cd-163	WTE280-2R1531	6044759
			Cable gland	2	Cd-169	WTE280-2H4331	6044730
				3	Cd-169	WTE280-2R4331	6044758

[1] Object with 90 % reflectance (referred to standard white, DIN 5033)

WL280-2, AC

- **Sensor principle:** photoelectric retro-reflective sensor
- **Switching mode:** light switching (provide suitable spark suppression for inductive or capacitive loads.)

Sensing range max. [1]	Light spot size (distance)	Output type	Connection	Overvoltage category	Connection diagram	Model name	Part no.
0.01 m ... 15 m	Ø 260 mm (8 m)	Relay	Cable, 5-wire, 2 m	2	Cd-229	WL280-2H1531	6044739
				3	Cd-163	WL280-2R1531	6044761
			Cable, 5-wire, 5 m	2	Cd-229	WL280-2H1631	6044740
			Cable gland	2	Cd-169	WL280-2H4331	6044738
				3	Cd-169	WL280-2R4331	6044760

[1] PL80A.

WSE280-2, AC

- **Sensor principle:** through-beam photoelectric sensor
- **Switching mode:** light switching (provide suitable spark suppression for inductive or capacitive loads.)

Sensing range max.	Light spot size (distance)	Output type	Connection	Overvoltage category	Connection diagram	Model name	Part no.
0 m ... 60 m	Ø 0.6 mm (20 m)	Relay	Cable, 5-wire, 2 m	2	Cd-228	WSE280-2H1531	6044748
				3	Cd-228	WSE280-2R1531	6044763
			Cable, 5-wire, 5 m	2	Cd-228	WSE280-2H1631	6044749
			Cable gland	2	Cd-227	WSE280-2H4331	6044747
				3	Cd-227	WSE280-2R4331	6044762

Dimensional drawings

Dimensions in mm (inch)

WTE280-2, WL280-2, DC

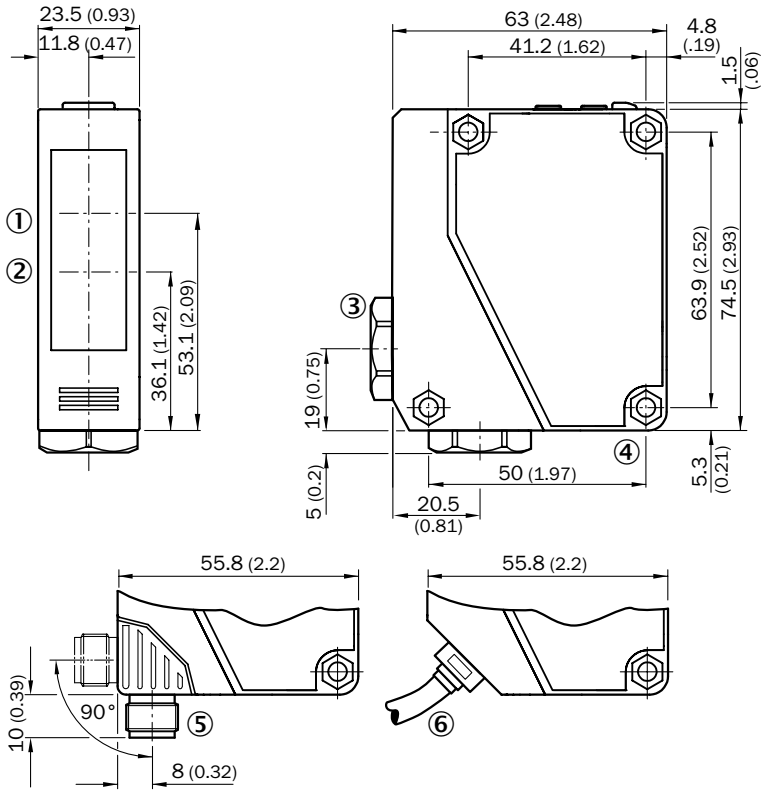

① Center of optical axis, receiver
② Center of optical axis, sender
③ Cable entry gland 3/8" for cable diameter 6 to 8 mm
④ Mounting hole, Ø 4.3 mm
⑤ Connector M12, 4-pin, 90° rotatable, can be locked with slider
⑥ Cable, 2 m, 3-pin, Ø 3,8 mm

WSE280-2, DC

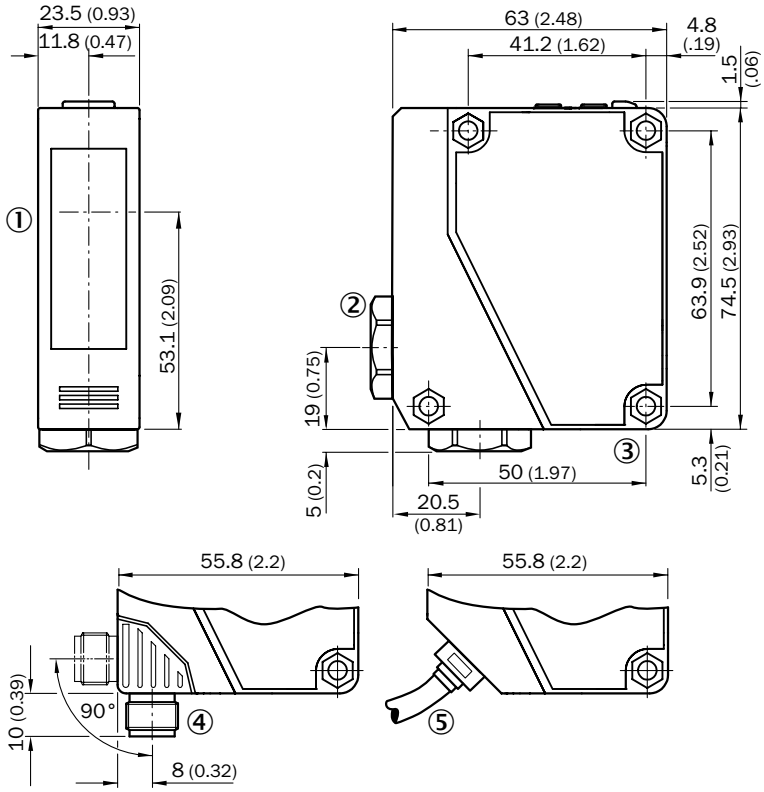

① Centre of optical axis, sender and receiver
② Cable entry gland 3/8" for cable diameter 6 to 8 mm
③ Mounting hole, Ø 4.3 mm
④ Connector M12, 4-pin, 90° rotatable, can be locked with slider
⑤ Cable, 2 m, 3-pin, Ø 3,8 mm

H

WTE280-2, WL280-2, AC/DC

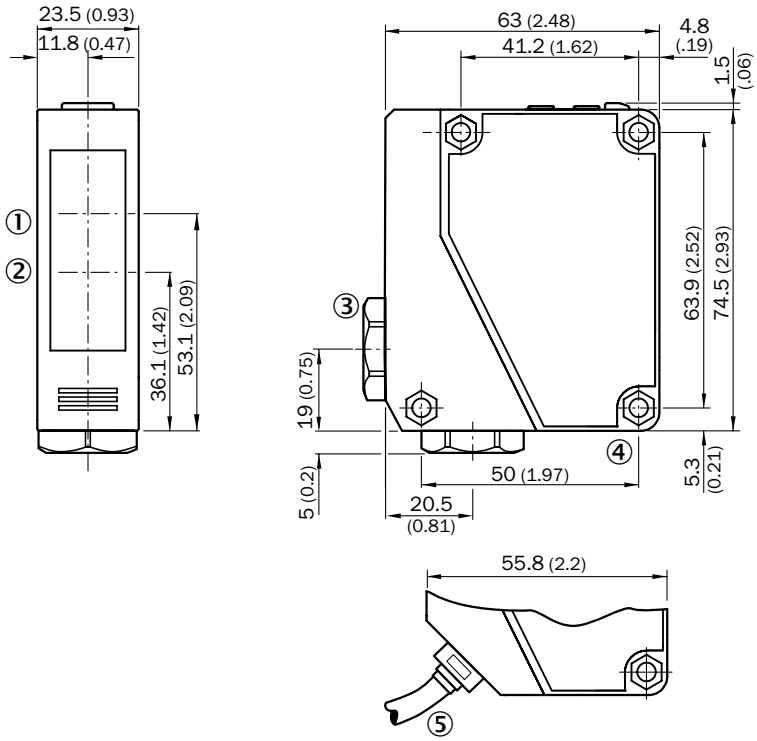

① Center of optical axis, receiver
② Center of optical axis, sender
③ Cable entry gland 3/8" for cable diameter 6 to 8 mm
④ Mounting hole, Ø 4.3 mm
⑤ Cable, 2 m, 5-wire, Ø 6,3 mm

WSE280-2, AC/DC

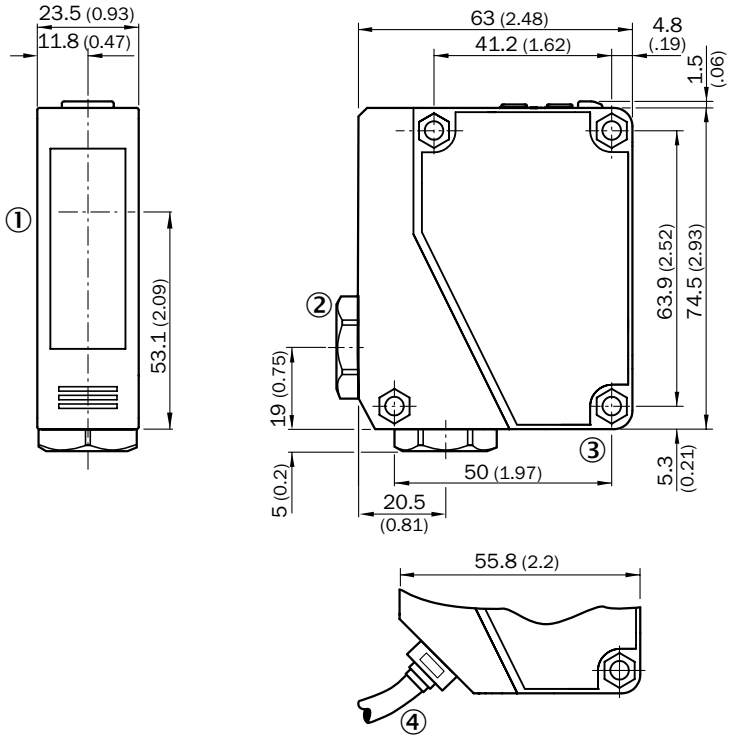

① Centre of optical axis, sender and receiver
② Cable entry gland 3/8" for cable diameter 6 to 8 mm
③ Mounting hole, Ø 4.3 mm
④ Cable, 2 m, 5-wire, Ø 6,3 mm

H

Adjustments

WTE280-2P/-2N, DC, WSE280-2P/-2N, DC

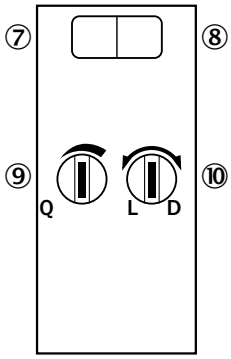

⑦ LED indicator green: Stability indicator
⑧ Status indicator LED, yellow: Status of received light beam
⑨ Sensing range/Sensitivity adjustment: potentiometer
⑩ Light/dark selector

WTE280-2, AC/DC, WL280-2H/-2R, WSE280-2H/-2R

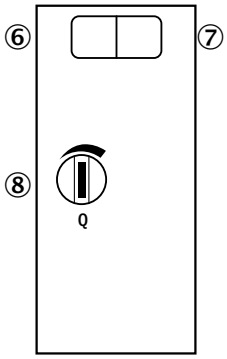

⑥ LED indicator green: Stability indicator
⑦ Status indicator LED, yellow: Status of received light beam
⑧ Sensing range/Sensitivity adjustment: potentiometer

Characteristic curves

Black-white shift

WTE280-2

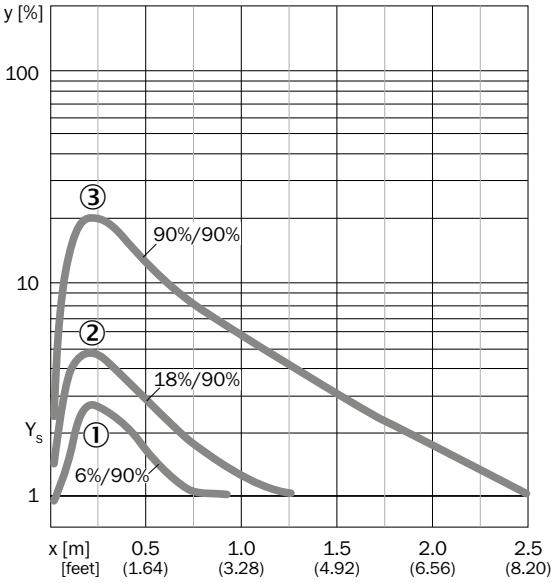

① Sensing range on black, 6 % remission
② Sensing range on gray, 18 % remission
③ Sensing range on white, 90 % remission

H

Operating reserve

WL280-2

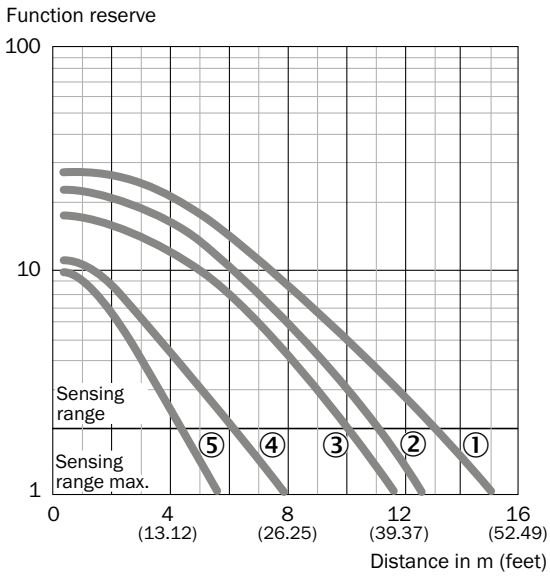

① Reflector type PL80A, C110A
② Reflector type P205
③ Reflector type PL50A, PL40A, PL30A, PL31A
④ Reflector type PL20A
⑤ Reflective tape Diamond Grade (100 mm x 100 mm/3.94 inch x 3.94 inch)

WSE280-2

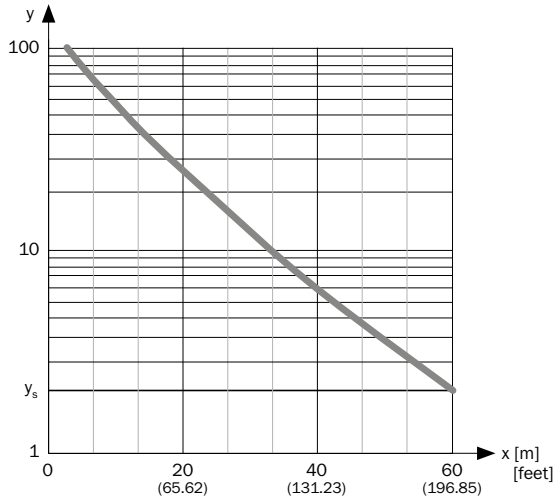

Bar diagrams

WTE280-2

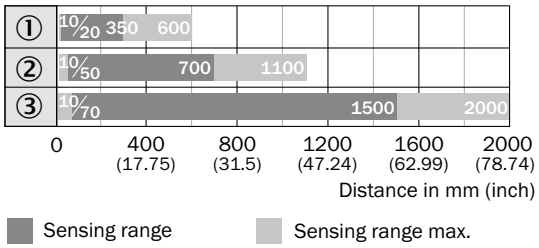

① Sensing range on black, 6 % remission
② Sensing range on gray, 18 % remission
③ Sensing range on white, 90 % remission

WL280-2

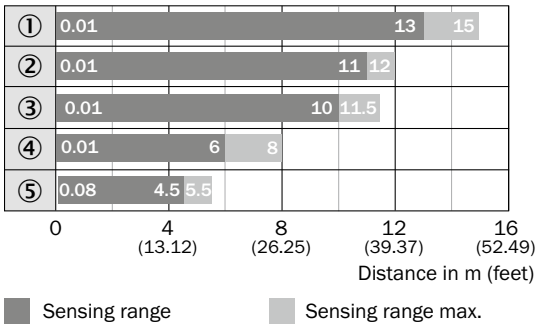

① Reflector type PL80A, C110A
② Reflector type P205
③ Reflector type PL50A, PL40A, PL30A, PL31A
④ Reflector type PL20A
⑤ Reflective tape Diamond Grade (100 mm x 100 mm/3.94 inch x 3.94 inch)

WSE280-2

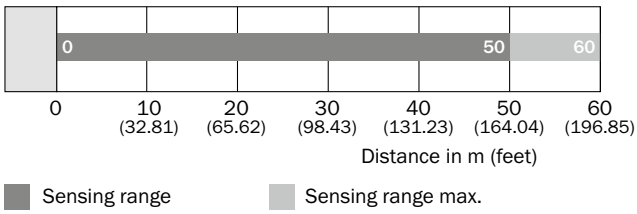

H

Connection diagram

Cd-043

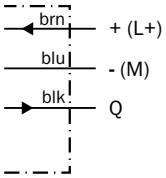

Cd-049

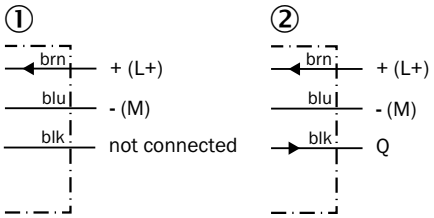

① Sender
② Receiver

Cd-068

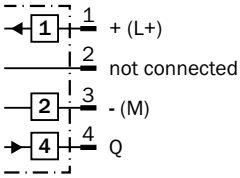

Cd-163

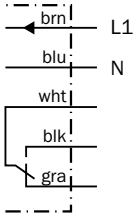

Cd-169

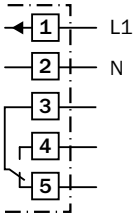

Cd-187

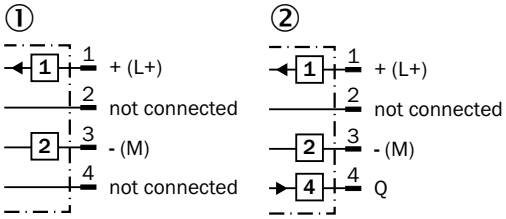

① Sender
② Receiver

Cd-190

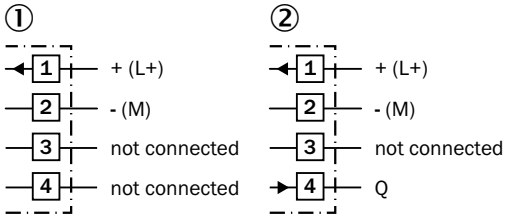

① Sender
② Receiver

H

Cd-207

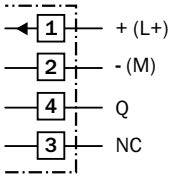

Cd-227

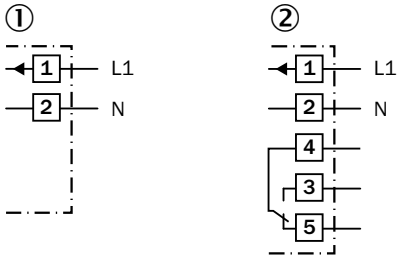

① Sender
② Receiver

Cd-228

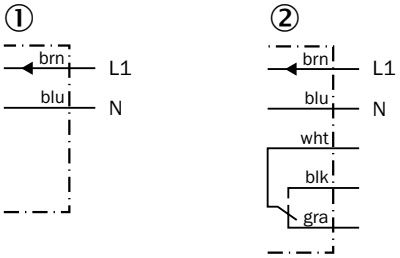

① Sender
② Receiver

Cd-229

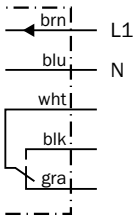

Recommended accessories

Mounting brackets/plates

Mounting brackets

Figure	Material	Description	Model name	Part no.
	Stainless steel V2A (1.4301)	Mounting bracket	BEF-W280	5313885

Plug connectors and cables

Connecting cable (female connector-open)

- **Connector material:** TPU

Figure	Connection type head A	Connection type head B	Connecting cable	Cable material	Enclosure rating	Model name	Part no.
	Female connector, M12, 4-pin, straight	Cable, open conductor heads	2 m, 4-wire	PVC	IP 67	DOL-1204-G02M	6009382
			5 m, 4-wire	PVC	IP 67	DOL-1204-G05M	6009866
			2 m, 4-wire	PUR, halogen-free	IP 65, IP 68, IP 69K	DOL-1204-G02MC	6025900
			5 m, 4-wire	PUR, halogen-free	IP 65, IP 68, IP 69K	DOL-1204-G05MC	6025901
	Female connector, M12, 4-pin, angled	Cable, open conductor heads	2 m, 4-wire	PVC	IP 67	DOL-1204-W02M	6009383
			5 m, 4-wire	PVC	IP 67	DOL-1204-W05M	6009867
			2 m, 4-wire	PUR, halogen-free	IP 65, IP 68, IP 69K	DOL-1204-W02MC	6025903
			5 m, 4-wire	PUR, halogen-free	IP 65, IP 68, IP 69K	DOL-1204-W05MC	6025904

Female connector (ready to assemble)

Figure	Connection type head A	Connection type head B	Connector material	Enclosure rating	Model name	Part no.
	Female connector, M12, 4-pin, straight	Screw-type terminals	PBT	IP 67	DOS-1204-G	6007302
	Female connector, M12, 4-pin, angled	Screw-type terminals	PBT	IP 67	DOS-1204-W	6007303

H

Male connector (ready to assemble)

Figure	Connection type head A	Connection type head B	Connector material	Enclosure rating	Model name	Part no.
	Male connector, M12, 4-pin, straight	Screw-type terminals	PBT	IP 67	STE-1204-G	6009932
	Male connector, M12, 4-pin, angled	Screw-type terminals	PBT	IP 67	STE-1204-W	6022084

Universal bar clamp systems

Figure	Material	Description	Model name	Part no.
	Zinc plated steel (sheet), Diecast zinc (clamp)	Plate N04 for universal clamp bracket	BEF-KHS-N04	2051610

Reflectors

Angular

Figure	Material	Description	Model name	Part no.
	PMMA/ABS	Rectangular, screw connection, 47 mm x 47 mm	P250	5304812
		Rectangular, screw connection, 38 mm x 15 mm	PL20A	1012719
		Rectangular, screw connection, 56 mm x 28 mm	PL30A	1002314
		Rectangular, screw connection, 37 mm x 56 mm	PL40A	1012720
		Rectangular, screw connection, 80 mm x 80 mm	PL80A	1003865

Reflective tape

Figure	Description	Model name	Part no.
	Self-adhesive, 50 mm x 60 mm	REF-IRF-56	5314244

Round

Figure	Material	Description	Model name	Part no.
	PMMA/ABS	Round, screw connection	C110A	5304549

→ **For additional accessories, please see page L-861**

H

Laser class 1 photoelectric proximity sensors – great performance, simple operation

H

Product description

The powerful photoelectric proximity sensor W280L-2 Long Range is characterized by its maximum sensing range of up to 4 m combined with extremely simple operation. The sensing range can be further extended to 18 m with the WLT280L-2 Long Range reflector version. The option of 2 independant switching outputs allows feedback of low and high detection points. Setup is easy through an intuitive sensing range adjustment potentiometer and indicator LED for each switching output. A visible red class 1 laser light ensures that the alignment is quick and precise. An integrated protective system in the W280L-2 Long Range prevents adverse effects caused by reflections in the background, for example, resulting from reflective metal surfaces, windows and warning vests. Additionally, the W280L-2 Long Range ignores cross-talk from an adjacent sensor.

At a glance

- WTT280L-2: sensing range up to 4 m
- WLT280L-2: sensing range up to 18 m
- Complete background suppression: very small black/white shift, insensitive against reflections from the background (e.g. shiny metal, window, safety vest)
- Visible red class 1 laser light
- Version 1: with 1 x switching output and light/dark switch, version 2: with 2 x switching outputs and light/dark switch
- Disable laser by wire
- Reliable detection also in very fast production processes thanks to the switching frequency of 1000 Hz

Your benefits

- Reliable target detection with difficult target colors, angles and color transitions (black/white shift)
- One sensor with two outputs and two status LEDs improves application flexibility and reduces the number of sensors needed
- Quick and easy comissioning with sensing range adjustment potentiometers and status LED – one for each output
- Quick and easy alignment with a red class 1 laser light
- Rotatable connector and light/dark switch for mounting and installation flexibility

Additional information

→ **www.mysick.com/en/W280L-2_Long_Range**

For more information, just enter the link or scan the QR code and get direct access to technical data, CAD design models, operating instructions, software, application examples and much more.

Detailed technical data

Features

	WTT280L-2 Long Range	WLT280L-2 Long Range
Sensor principle	Photoelectric proximity sensor	
Detection principle	Background suppression	
Dimensions (W x H x D)	23.5 mm x 76 mm x 55.8 mm	
Housing design (light emission)	Rectangular	
Sensing range max.	200 mm ... 4,000 mm [1] 200 mm ... 3,000 mm [2]	200 mm ... 18,000 mm [3]
Sensing range	–	200 mm ... 18,000 mm
Type of light	Visible red light	
Light source [4]	Laser	
Light spot size (distance)	Ø 12 mm (3 m)	Ø 50 mm (18 m)
Laser class	1 (EN 60825-1:2008-5, IEC 60825-1:2007-03)	
Adjustment	Potentiometer	

[1] Object with 90 % reflectance (referred to standard white, DIN 5033)
[2] Objects to be sensed with 6 % reflectivity (based on black)
[3] Reflector P250, PL80A.
[4] Average service life of 100,000 h at T_A = +25 °C.

Mechanics/electronics

	WTT280L-2 Long Range	WLT280L-2 Long Range
Supply voltage [1]	10 V DC ... 30 V DC	
Ripple [2]	≤ 3 V_{pp}	
Power consumption [3]	≤ 70 mA	
Output type	PNP, open collector/NPN, open collector 2 x PNP, open collector/ 2 x NPN, open collector (depending on type)	2 x PNP, open collector 2 x NPN, open collector (depending on type)
Switching mode	Light/dark-switching (selectable via light/dark rotary switch)	
Output current $I_{max.}$	≤ 100 mA	
Response time [4]	≤ 0.5 ms	≤ 2 ms
Switching frequency [5]	1,000 Hz	± 250 Hz
Connection type	Cable, 2 m [6]/Male connector (depending on type)	
Circuit protection	A [7], B [8], C [9], D [10]	
Protection class	III	
Weight	120 g	
Housing material	ABS	
Optics material	PMMA	
Enclosure rating	IP 67	
Items supplied	Mounting bracket BEF-W280	
EMC [11]	EN 60947-5-2	
Ambient operating temperature	–10 °C ... +50 °C	
Ambient storage temperature	–40 °C ... +70 °C	

[1] Limit values, operation in short-circuit protected network max. 8 A.
[2] May not exceed or fall short of V_S tolerances.
[3] Without load.
[4] Signal transit time with resistive load.
[5] With light/dark ratio 1:1.
[6] Do not bend below 0 °C.
[7] A = V_S connections reverse-polarity protected.
[8] B = output reverse-polarity protected.
[9] C = interference suppression.
[10] D = outputs overcurrent and short-circuit protected.
[11] The devices meet the interference suppression requirements for industrial use (interference suppression class A). When used in residential areas it can cause interference.

H

Ordering information

Other models available at www.mysick.com/en/W280L-2_Long_Range

WTT280L-2 Long Range

- **Sensor principle:** photoelectric proximity sensor
- **Voltage type:** DC
- **Switching mode:** light/dark-switching

Sensing range max.	Light spot size (distance)	Output type	Connection	Connection diagram	Model name	Part no.
200 mm ... 4,000 mm [1] 200 mm ... 3,000 mm [2]	Ø 12 mm (3 m)	PNP	Cable, 5-wire, 2 m, PVC	Cd-209	WTT280L-2P1531	6048065
			Connector M12, 5-pin	Cd-210	WTT280L-2P2531	6048061
		NPN	Cable, 5-wire, 2 m, PVC	Cd-209	WTT280L-2N1531	6048067
			Connector M12, 5-pin	Cd-210	WTT280L-2N2531	6048063
		2 x PNP	Cable, 5-wire, 2 m, PVC	Cd-208	WTT280L-2P1536	6048066
			Connector M12, 5-pin	Cd-211	WTT280L-2P2536	6048062
		2 x NPN	Cable, 5-wire, 2 m, PVC	Cd-208	WTT280L-2N1536	6048068
			Connector M12, 5-pin	Cd-211	WTT280L-2N2536	6048064

[1] Object with 90 % reflectance (referred to standard white, DIN 5033)

[2] Objects to be sensed with 6 % reflectivity (based on black)

WLT280L-2 Long Range

- **Sensor principle:** photoelectric proximity sensor
- **Voltage type:** DC
- **Switching mode:** light/dark-switching

Sensing range max. [1]	Light spot size (distance)	Output type	Connection	Connection diagram	Model name	Part no.
200 mm ... 18,000 mm	Ø 50 mm (18 m)	2 x PNP	Cable, 5-wire, 2 m, PVC	Cd-208	WLT280L-2P1536	6048071
			Connector M12, 5-pin	Cd-211	WLT280L-2P2536	6048069
		2 x NPN	Cable, 5-wire, 2 m, PVC	Cd-208	WLT280L-2N1536	6048072
			Connector M12, 5-pin	Cd-211	WLT280L-2N2536	6048070

[1] Reflector P250, PL80A.

Dimensional drawing

Dimensions in mm (inch)

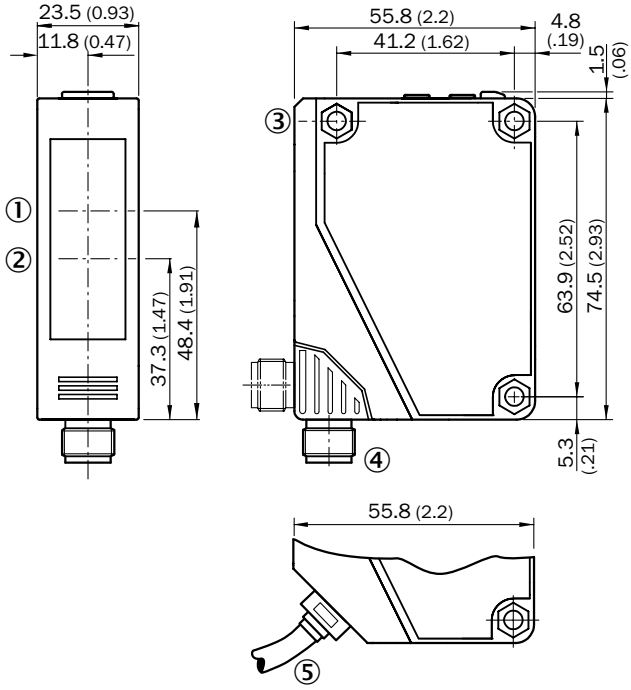

① Center of optical axis, receiver
② Center of optical axis, sender
③ Mounting hole, Ø 4.3 mm
④ Connector M12, 5-pin, rotatable by 90°
⑤ Cable, 2 m, 5-wire, Ø 3.8 mm

Adjustments

WTT280L-2xxxx1

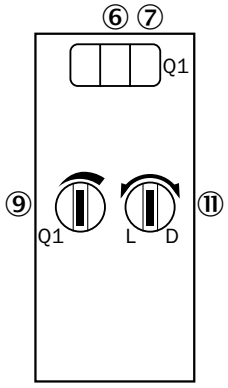

⑥ LED indicator green: Stability indicator
⑦ Status indicator LED, yellow: Status of received light beam
⑨ Sensing range adjustment: potentiometer
⑪ Light/dark selector

WxT280L-2xxxx6

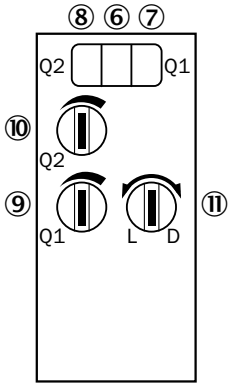

⑥ LED indicator green: Stability indicator
⑦ Status indicator LED, yellow: Status of received light beam (switching output 1)
⑧ Status indicator LED, yellow: Status of received light beam (switching output 2)
⑨ Sensing range adjustment: potentiometer for switching output 1
⑩ Sensing range adjustment: potentiometer for switching output 2
⑪ Light/dark selector

Bar diagrams

Bar diagram photoelectric proximity sensors

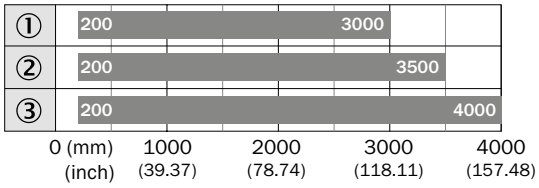

Sensing range max.

① Sensing range on black, 6 % remission
② Sensing range on gray, 18 % remission
③ Sensing range on white, 90 % remission

H

Connection diagram

Cd-208

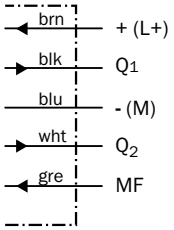

Cd-209

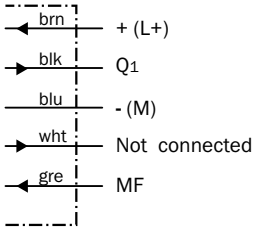

Cd-210

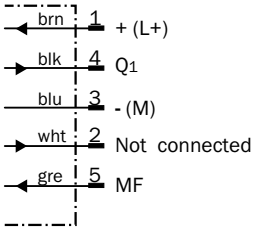

Cd-211

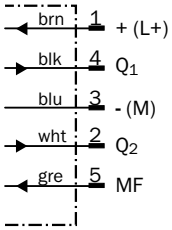

Recommended accessories

Mounting brackets/plates

Mounting brackets

Figure	Material	Description	Model name	Part no.
	Stainless steel V2A (1.4301)	Mounting bracket	BEF-W280	5313885

Plug connectors and cables

Connecting cable (female connector-open)

- **Cable material:** PVC
- **Connector material:** TPU

Figure	Connection type head A	Connection type head B	Connecting cable	Enclosure rating	Model name	Part no.
	Female connector, M12, 5-pin, straight	Cable, open conductor heads	2 m, 5-wire	IP 67	DOL-1205-G02M	6008899
			5 m, 5-wire	IP 67	DOL-1205-G05M	6009868

H

Universal bar clamp systems

Figure	Material	Description	Model name	Part no.
	Zinc plated steel (sheet), Diecast zinc (clamp)	Plate N04 for universal clamp bracket	BEF-KHS-N04	2051610

Reflectors

Angular

Figure	Material	Description	Model name	Part no.
	PMMA/ABS	Rectangular, screw connection, 47 mm x 47 mm	P250	5304812
		Rectangular, screw connection, 80 mm x 80 mm	PL80A	1003865

Fine triple reflectors

Figure	Material	Description	Model name	Part no.
	PMMA/ABS	Fine triple, screw connection, suitable for laser sensors, 47 mm x 47 mm	P250F	5308843
		Fine triple, self-adhesive, suitable for laser sensors, Ø 23 mm	P25F-1	5319385
		Reflector with microprismatic reflex tape REF-AC1000, suitable for laser sensors, see alignment note, 23 mm x 23 mm	P41F	5315128
		Fine triple, screw connection, suitable for laser sensors, 18 mm x 18 mm	PL10F	5311210
		Fine triple, screw connection, suitable for laser sensors, 38 mm x 16 mm	PL20F	5308844
		Fine triple, screw connection, suitable for laser sensors, 56 mm x 28 mm	PL30F	5326523
		Fine triple, screw connection, suitable for laser sensors, 76 mm x 45 mm	PL81-1F	5325060

Reflective tape

Figure	Description	Model name	Part no.
	Suitable for laser sensors, self-adhesive, cut, see alignment note, 56.3 mm x 56.3 mm	REF-AC1000-56	4063030

→ **For additional accessories, please see page L-861**

H

Power, flexibility and reliability for long-range applications

AC/DC

H

Product description

The W2000 sensor family offers advanced features with application flexibility and long sensing ranges. Designed with an IP 67-rated housing and a watertight front window, the W2000 is ideal for harsh duty applications. The gasketed top cover can be easily opened to provide access to timing functions, sensitivity adjustments, and a light/dark switching mode. The W2000 family also features SICK's custom Application-Specific Integrated Circuit (ASIC). This superior technology eliminates crosstalk interference and provides immunity to ambient lighting. Three LED indicators provide easily identifiable power, signal and status information from any angle. The W2000 through-beam, retro-reflective and energetic proximity variants enable users to chose the version suited for their application needs.

At a glance

- Rugged, plastic housing
- Crosstalk and ambient light immunity
- Adjustable sensing range
- Signal strength indicator
- IP 67/NEMA 6 enclosure rating

Your benefits

- Application-Specific Integrated Circuit (ASIC) technology eliminates crosstalk interference and provides ambient light immunity, which reduces false detection of unwanted targets
- Rugged IP-67 rated housing withstands harsh duty applications, increasing the sensor lifetime
- Three LED indicators make it easy to install and troubleshoot
- Versatile mounting brackets and cable options simplify installation

Additional information

→ **www.mysick.com/en/W2000**

For more information, just enter the link or scan the QR code and get direct access to technical data, CAD design models, operating instructions, software, application examples and much more.

Detailed technical data

Features

	DC			AC/DC		
	WT2000	WL2000	WS/WE2000	WT2000	WL2000	WS/WE2000
Sensor principle	Photoelectric proximity sensor	Photoelectric retro-reflective sensor	Through-beam photoelectric sensor	Photoelectric proximity sensor	Photoelectric retro-reflective sensor	Through-beam photoelectric sensor
Dimensions (W x H x D)	45 mm x 73.7 mm x 48.6 mm					
Housing design (light emission)	Rectangular					
Sensing range max.	0 m ... 3.5 m [1]	0 m ... 15 m [2]	0 m ... 50 m	0 m ... 3.5 m [1]	0 m ... 15 m [2]	0 m ... 50 m
Sensing range	0 m ... 3.5 m [1]	0 m ... 15 m [2]	0 m ... 50 m	0 m ... 3.5 m [1]	0 m ... 15 m [2]	0 m ... 50 m
Type of light	Infrared light	Visible red light	Infrared light		Visible red light	Infrared light
Light source [3]	LED					
Light spot size (distance)	Ø 55 mm (2.5 m)	Ø 320 mm (14 m)		Ø 55 mm (2.5 m)	Ø 320 mm (14 m)	
Angle of dispersion	Approx. 1.3°		1.3°	Approx. 1.3°		1.3°
Wave length						
Infrared light	880 nm					
Visible red light	660 nm					
Time type	Time delay off [4], Switch on delay [5]					

[1] Object with 90 % reflectance (referred to standard white, DIN 5033)
[2] PL80A.
[3] Average service life of 100,000 h at T_A = +25 °C.
[4] Adjustable via Off delay selector switch.
[5] Adjustable via On delay selector switch.

Mechanics/electronics

	DC			AC/DC		
	WT2000	WL2000	WS/WE2000	WT2000	WL2000	WS/WE2000
Supply voltage [1]	10 V DC ... 30 V DC			24 V AC/DC ... 240 V AC/DC		
Ripple [2]	≤ 5 V			–		
Power consumption [3]	≤ 80 mA			≤ 6 W		
Output type	PNP, NPN			Relay, electrically isolated		
Output function	Complementary, complementary			Change-over contacts		
Switching mode	Light/dark-switching (selectable via light/dark selector)					
Signal voltage PNP HIGH/LOW	Approx. VS – 2.0 V / 0 V			–		
Output current $I_{max.}$	100 mA			–		
Switching current (switching voltage)	–			3 A (265 V)		
Response time [4]	≤ 1 ms			≤ 10 ms		
Switching frequency	500 Hz			10 Hz		
Connection type	Cable, 2 m [5] / Male connector (depending on type)					
Circuit protection	A [6], C [7], D [8]			–		
Protection class [9]	II					
Weight	5.3 oz, 150 g					
Polarisation filter	–	✔	–		✔	–
Alarm output	PNP			–		

H

	DC			AC/DC		
	WT2000	WL2000	WS/WE2000	WT2000	WL2000	WS/WE2000
Housing material	Glassfibre reinforced plastic					
Enclosure rating	IP 67, NEMA 6					
Ambient operating temperature	–13 °F ... 104 °F / –25 °C ... +40 °C					
Ambient storage temperature	–40 °F ... 158 °F / –40 °C ... +70 °C					

[1] Limit values.
[2] May not exceed or fall short of V_S tolerances.
[3] Without load.
[4] Signal transit time with resistive load.
[5] Do not bend below 0 °C.
[6] A = V_S connections reverse-polarity protected.
[7] C = interference suppression.
[8] D = outputs overcurrent and short-circuit protected.
[9] Reference voltage: 50 V DC.

Ordering information

Other models available at www.mysick.com/en/W2000

WT2000, DC

- **Sensor principle:** Photoelectric proximity sensor
- **Type of light:** Infrared light
- **Light spot size (distance):** Ø 2.2 in (8.2 ft) / Ø 55 mm (2.5 m)
- **Output type:** PNP, NPN
- **Switching mode:** Light/dark-switching
- **Alarm output:** PNP

Sensing range max. [1]	Time functions	Connection	Connection diagram	Model name	Part no.
0 ft ... 11.5 ft 0 m ... 3.5 m	–	Cable, 5-wire, 2 m, PVC	Cd-142	WT2000-B1102	7023056
		Connector M12, 4-pin	Cd-086	WT2000-B4100	7024001
		Connector M12, 5-pin	Cd-154	WT2000-B5100	7023059
	Time delay off [2] Switch on delay [3]	Cable, 5-wire, 2 m, PVC	Cd-142	WT2000-B1122	7023058
		Connector M12, 5-pin	Cd-154	WT2000-B5120	7023061

[1] Object with 90 % reflectance (referred to standard white, DIN 5033)
[2] Adjustable via Off delay selector switch.
[3] Adjustable via On delay selector switch.

H

WL2000, DC

- **Sensor principle:** Photoelectric retro-reflective sensor
- **Type of light:** visible red light
- **Light spot size (distance):** Ø 12.5 in (45.9 ft) / Ø 320 mm (14 m)
- **Output type:** PNP, NPN
- **Switching mode:** Light/dark-switching
- **Alarm output:** PNP

Sensing range max. [1]	Time functions	Connection	Connection diagram	Model name	Part no.
0 ft ... 49 ft 0 m ... 15 m	–	Cable, 5-wire, 2 m, PVC	Cd-142	WL2000-B1302	7023044
		Connector M12, 4-pin	Cd-086	WL2000-B4300	7024002
		Connector M12, 5-pin	Cd-154	WL2000-B5300	7023047
	Time delay off [2] Switch on delay [3]	Cable, 5-wire, 2 m, PVC	Cd-142	WL2000-B1322	7023046
		Connector M12, 5-pin	Cd-154	WL2000-B5320	7023049

[1] PL80A.
[2] Adjustable via Off delay selector switch.
[3] Adjustable via On delay selector switch.

WS/WE2000, DC

- **Sensor principle:** Through-beam photoelectric sensor
- **Type of light:** Infrared light
- **Light spot size (distance):** 12.5 in (45.9 ft) / Ø 320 mm (14 m)
- **Output type:** PNP, NPN
- **Switching mode:** Light/dark-switching
- **Alarm output:** PNP

Sensing range max.	Time functions	Connection	Connection diagram	Model name	Part no.
0 ft ... 164 ft 0 m ... 50 m	–	Cable, 5-wire, 2 m, PVC	Cd-206	WS/WE2000-B1102	7025964
		Connector M12, 4-pin	Cd-215	WS/WE2000-B4100	7028604
		Connector M12, 5-pin	Cd-155	WS/WE2000-B5100	7025965
	Time delay off [1] Switch on delay [2]	Cable, 5-wire, 2 m, PVC	Cd-206	WS/WE2000-B1122	7025966
		Connector M12, 5-pin	Cd-155	WS/WE2000-B5120	7025967

[1] Adjustable via Off delay selector switch.
[2] Adjustable via On delay selector switch.

WT2000, AC/DC

- **Sensor principle:** Photoelectric proximity sensor
- **Type of light:** Infrared light
- **Light spot size (distance):** Ø 2.2 in (8.2 ft) / Ø 55 mm (2.5 m)
- **Output type:** relay
- **Switching mode:** Light/dark-switching

Sensing range max. [1]	Time functions	Connection	Connection diagram	Model name	Part no.
0 ft ... 11.5 ft 0 m ... 3.5 m	–	Cable, 5-wire, 2 m, PVC	Cd-165	WT2000-R1102	7023062
		Mini connector, 5-pin	Cd-171	WT2000-R5100	7023065
	Time delay off [2] Switch on delay [3]	Cable, 5-wire, 2 m, PVC	Cd-165	WT2000-R1122	7023064
		Mini connector, 5-pin	Cd-171	WT2000-R5120	7023067

[1] Object with 90 % reflectance (referred to standard white, DIN 5033)
[2] Adjustable via Off delay selector switch.
[3] Adjustable via On delay selector switch.

WL2000, AC/DC

- **Sensor principle:** Photoelectric retro-reflective sensor
- **Type of light:** visible red light
- **Light spot size (distance):** Ø 12.5 in (45.9 ft) / Ø 320 mm (14 m)
- **Output type:** relay
- **Switching mode:** Light/dark-switching

Sensing range max. [1]	Time functions	Connection	Connection diagram	Model name	Part no.
0 ft ... 49 ft 0 m ... 15 m	–	Cable, 5-wire, 2 m, PVC	Cd-165	WL2000-R1302	7023050
		Mini connector, 5-pin	Cd-171	WL2000-R5300	7023053
	Time delay off [2] Switch on delay [3]	Cable, 5-wire, 2 m, PVC	Cd-165	WL2000-R1322	7023052
		Mini connector, 5-pin	Cd-171	WL2000-R5320	7023055

[1] PL80A.
[2] Adjustable via Off delay selector switch.
[3] Adjustable via On delay selector switch.

WS/WE2000, AC/DC

- **Sensor principle:** Through-beam photoelectric sensor
- **Type of light:** Infrared light
- **Light spot size (distance):** 12.5 in (45.9 ft) / Ø 320 mm (14 m)
- **Output type:** relay
- **Switching mode:** Light/dark-switching

Sensing range max.	Time functions	Connection	Connection diagram	Model name	Part no.
0 ft ... 164 ft 0 m ... 50 m	–	Cable, 5-wire, 2 m, PVC	Cd-046	WS/WE2000-R1102	7025968
		Mini connector, 5-pin	Cd-172	WS/WE2000-R5100	7025969
	Time delay off [1] Switch on delay [2]	Cable, 5-wire, 2 m, PVC	Cd-046	WS/WE2000-R1122	7025970
		Mini connector, 5-pin	Cd-172	WS/WE2000-R5120	7025971

[1] Adjustable via Off delay selector switch.
[2] Adjustable via On delay selector switch.

Dimensional drawing

Dimensions in mm (inch)

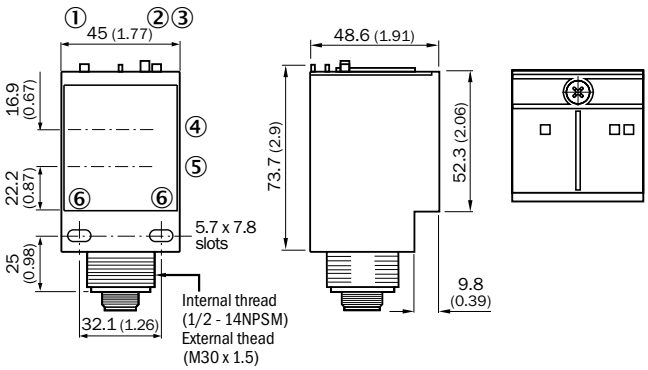

① Status indicator LED green: power on
② Status indicator LED red: signal strength
③ Status indicator LED, yellow: Output active
④ Center of emitter optical axis
⑤ Center of receiver optical axis
⑥ Mounting hole ø 0.2 mm x 0.8 mm

Adjustments

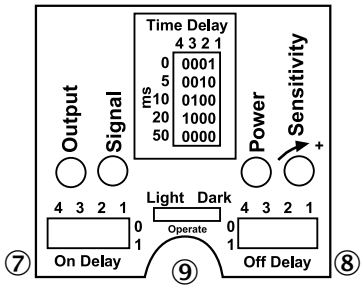

⑦ ON delay selector
⑧ ON delay selector
⑨ Light/dark selector

H

Characteristic curves

Black-white shift

WT2000

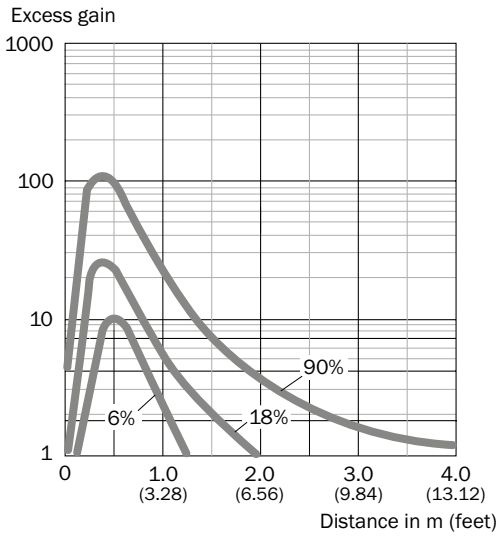

Operating range

WL2000

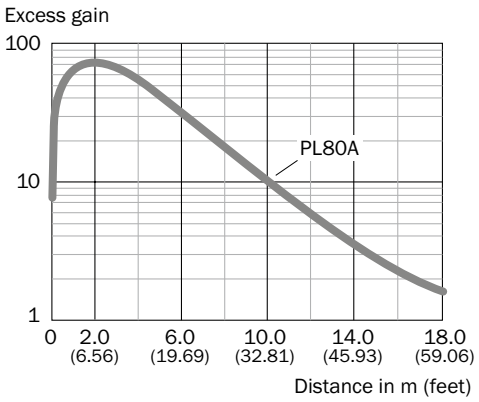

WS/WE2000

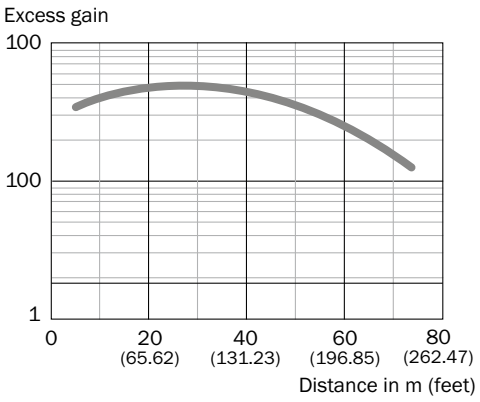

H

Bar diagrams

WT2000

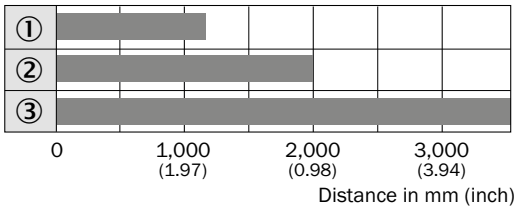

Sensing range

① Sensing range on black, 6 % remission
② Sensing range on gray, 18 % remission
③ Sensing range on white, 90 % remission

WL2000

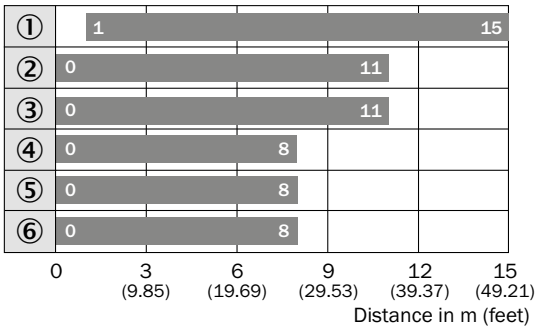

Sensing range

① PL80A
② PL50A
③ PL40A
④ PL30A
⑤ PL20A
⑥ Reflective tape Diamond Grade

WS/WE2000

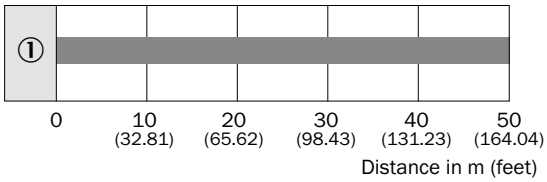

Sensing range

Connection diagram

Cd-046

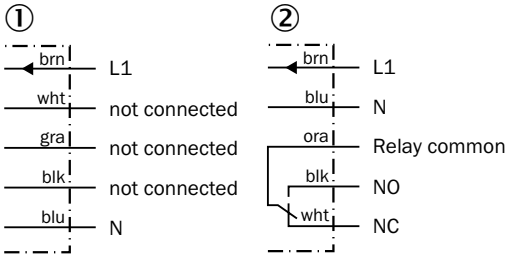

① Sender
② Receiver

Cd-086

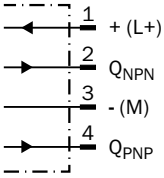

Cd-142

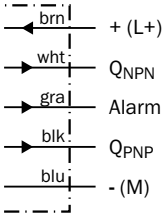

Cd-154

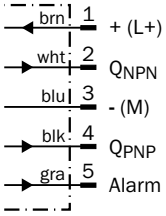

Cd-155

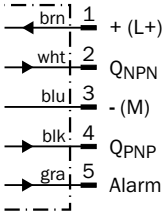

Cd-165

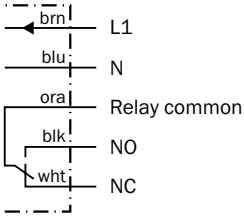

Cd-171

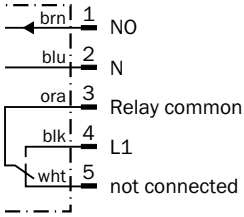

Cd-172

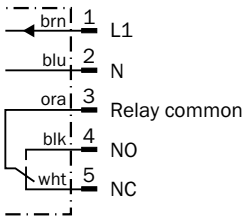

Cd-206

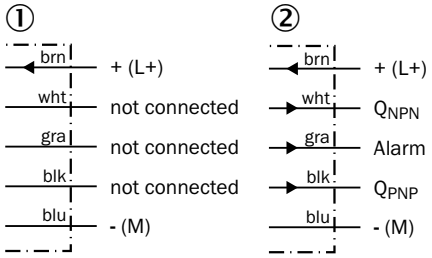

① Sender
② Receiver

Cd-215

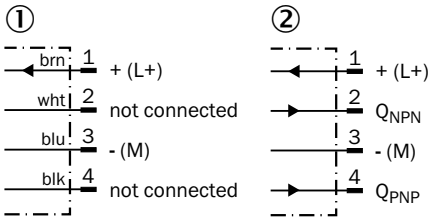

① Sender
② Receiver

Recommended accessories

Plug connectors and cables

Connecting cable (female connector-open)

- **Enclosure rating:** IP 67

Figure	Connection type head A	Connection type head B	Cable length	Model name	Part no.
	Female connector, M12, 4-pin, straight	Cable	2 m	DOL-1204-G02M	6009382
			5 m	DOL-1204-G05M	6009866
	Female connector, M12, 4-pin, angled	Cable	2 m	DOL-1204-W02M	6009383
			5 m	DOL-1204-W05M	6009867

H

Reflectors

Angular

- **Description:** Rectangular, screw connection

Figure	Material	Dimensions	Model name	Part no.
	PMMA/ABS	47 mm x 47 mm	P250	5304812
		38 mm x 15 mm	PL20A	1012719
		56 mm x 28 mm	PL30A	1002314
		37 mm x 56 mm	PL40A	1012720
		80 mm x 80 mm	PL80A	1003865

Reflective tape

Figure	Description	Dimensions	Model name	Part no.
	Self-adhesive	50 mm x 60 mm	REF-IRF-56	5314244

Round

Figure	Description	Material	Diameter	Model name	Part no.
	Round, screw connection	PMMA/ABS	80 mm	C110A	5304549

→ **For additional accessories, please see page L-861**

H

H

A well-rounded package

No tools required: cylindrical sensors are easy to install and ready for operation in no time. With the broadest portfolio on the market, this sensor family offers total versatility. They are equipped with an innovative mounting system, short-body or standard housings in metal, INOX stainless steel, or plastic, in versions suitable for food and beverage, or with high-precision laser technology. The comprehensive range covers the entire application spectrum of modern photoelectric sensor technology. SICK's cylindrical sensors are simply designed for every area of application.

Your benefits

- The solution for economical challenges thanks to simple mounting, standardized connection technology and universal use
- Compatible due to standardized design in cylindrical housing, standardized connection system and electrical interfaces
- High operating reserves and access to new solutions due to large sensing ranges and similar system specifications for all variants
- Standard housing made of plastic, metal or stainless steel ensures durability in rough environmental conditions

8015327/2014-02-08

Cylindrical photoelectric sensors

Cylindrical photoelectric sensors from SICK: Versatile designs for a wide range of applications

Short

M18 short housing designs – ideal for universal space-saving solutions

The extremely short design is a feature of sensors from the GR18S product family and the MH15V stainless steel variant. The right-angle versions, in particular, require very little space and are therefore the ideal solution for tight installation spaces.

Standard

Top performance standard design for universal applications – a cost-effective and well-rounded solution

Adapted to the key requirements of the market, the sensors from the V180-2, V18V, and V18 Laser product families are an extremely cost-effective solution thanks to their standard M18 housing. In addition to plastic and metal housings, a rugged stainless steel variant is also available for use in hygiene and washdown zones.

Hybrid

Flexible and versatile – SICK's hybrid designs combine state-of-the-art industrial design with SICK technology to produce an optimum application solution

Cylindrical photoelectric sensors from the ELF, Z-Sensor and W15 product families are highly versatile thanks a wide range of special housing options. The Z1 and Z2 sensors have an integrated M18 male thread and additional mounting holes. The Z3 sensor can be infinitely aligned in any direction, just like the human eye. The hybrid design of the W15 product family impresses with the flexibility of its mounting options.

Flexible mounting and application options thanks to a universal and simple M18 mounting hole

In addition to the simple mounting hole of the standard M18 housings, the special “fully flush” mounting allows cylindrical photoelectric sensors to be used in even more areas. These flush-mount housing variants provide superior solutions for all tasks where it is essential that sensor and mounting does not interfere with the target.

Thanks to the short housing designs and "fully flush" mounting, GR18S cylindrical photoelectric sensors can be flush-mounted practically anywhere.

The "fully flush" metal variant was designed specially for the harsh environment of storage and conveyor systems.

Short housings and right-angle designs allow for a high level of installation flexibility, particularly when space is restricted.

The stainless steel variants of the MH15V and V18V cylindrical photoelectric sensors can handle even the most adverse conditions.

Flexible and flush mounting with the flush variant and snap ring allows the sensor to be positioned at the heart of the process and ensures very short mounting times.

The hybrid design of the Z3 cylindrical photoelectric sensor can be infinitely rotated and aligned in any direction.

Overview of cylindrical photoelectric sensors

Cylindrical photoelectric sensors	Housing									Sensor principle						
	Material			Enclosure rating			Housing design									
	Stainless steel	Plastic	Metal	IP 67	IP 68	IP 69K	Cylindrical, axial	Cylindrical, radial	Hybrid	Photoelectric proximity sensor	Energetic	Background suppression	Photoelectric retro-reflective sensor	Dual lens	Through-beam photoelectric sensor	
ELF																
ELF3		■		■					■	■	■		■	■		
GR18																
GR18S NEW		■	■	■			■	■		■	■		■	■	■	
MH15																
MH15V	■			■	■	■	■			■	■	■	■	■	■	
V18																
V18 Laser			■	■			■	■		■	■		■	■	■	
V18V	■			■	■	■	■			■	■	■	■	■	■	
V180																
V180-2		■	■	■			■	■		■	■	■	■	■	■	
W15																
W15		■		■					■	■	■	■	■	■	■	
Z-Sensor																
Z-Sensor		■		■					■	■	■	■	■	■		

	Optics/Technology					Special applications				Page
	Type of light/Light sender				Technology					
	LED infrared light	LED red light	★ Red laser light	★ PinPoint LED red light	SIRIC®	Hygienic and washdown zones	Detecting transparent objects	Detecting small objects	Detecting objects wrapped in film	
	■	■						■		I-692
		■		■			■	■		I-698
	■	■		■		■				I-714
		■	■					■		I-724
	■	■				■	■	■		I-732
		■						■		I-742
	■	■		■	■				■	I-766
	■	■								I-776

Photoelectric proximity sensors

	Maximum sensing range	Dimensions (W x H x D)/ Housing length	Page
ELF	0 mm ... 155 mm	23.8 mm x 45.4 mm x 33.6 mm	I-692
Z-Sensor	0 mm ... 155 mm	13.6 mm x 45.2 mm x 31.7 mm	I-776
MH15V	10 mm ... 350 mm	52.9 mm	I-714
W15	4 mm ... 350 mm	16.2 mm x 48.5 mm x 31.9 mm	I-766
V18 Laser	0 mm ... 400 mm	97.7 mm ... 107.7 mm	I-724
GR18S	3 mm ... 550 mm	36.1 mm ... 53.7 mm	I-698
V18V	0 mm ... 900 mm	83 mm	I-732
V180-2	1 mm ... 1,100 mm	62.5 mm ... 84.2 mm	I-742

Photoelectric retro-reflective sensors

	Maximum sensing range	Dimensions (W x H x D)/ Housing length	Page
ELF	0.1 m ... 4.8 m	23.8 mm x 45.4 mm x 33.6 mm	I-692
Z-Sensor	0.1 m ... 4.8 m	13.6 mm x 45.2 mm x 31.7 mm	I-776
MH15V	0.035 m ... 5 m	52.9 mm	I-714
V18V	0.035 m ... 5 m	83 mm	I-732
W15	0.035 m ... 5 m	16.2 mm x 48.5 mm x 31.9 mm	I-766
V180-2	0.05 m ... 7 m	62.5 mm ... 84.2 mm	I-742
GR18S	0.03 m ... 7.2 m	36.1 mm ... 53.7 mm	I-698
V18 Laser	0.1 m ... 35 m	97.7 mm ... 107.7 mm	I-724

Through-beam photoelectric sensors

	Maximum sensing range	Dimensions (W x H x D)/ Housing length	Page
MH15V	0 m ... 5 m	52.9 mm	I-714
W15	0 m ... 5 m	16.2 mm x 48.5 mm x 31.9 mm	I-766
GR18S	0 m ... 15 m	36.1 mm ... 53.7 mm	I-698
V18V	0 m ... 20 m	83 mm	I-732
V180-2	0 m ... 28 m	62.5 mm ... 84.2 mm	I-742
V18 Laser	0 m ... 60 m	97.7 mm ... 107.7 mm	I-724

Product family overview

	ELF3	GR18S	MH15V	V18 Laser
				
	Hybrid sensor with integrated M18 threads for front and base mounting	Round, short and economically unbeatable	Space-saving photoelectric sensors designed for wash down applications	Low-cost cylindrical M18 Laser photoelectric sensor
Technical data overview				
Optical axis		Axial/Axial, fully flush Radial/Radial, fully flush	Axial	Axial / radial
Dimensions (W x H x D)	23.8 mm x 45.4 mm x 33.6 mm	–	–	–
Sensing range max.				
Photoelectric proximity sensor	0 mm ... 155 mm	3 mm ... 550 mm	3 mm ... 350 mm	0 mm ... 400 mm
Photoelectric retro-reflective sensor	0.1 m ... 4.8 m	0.03 m ... 7.2 m	0.035 m ... 5 m	0.1 m ... 35 m
Through-beam photoelectric sensor		0 m ... 15 m	0 m ... 5 m	0 m ... 60 m
Light source	LED	PinPoint LED	PinPoint LED / LED	Laser
Type of light	Visible red light / Infrared light	Visible red light	Visible red light / Infrared light	Visible red light
Enclosure rating	IP 67	IP 67	IP 67, IP 68, IP 69K	IP 67
Housing material	Plastic	Metal/Plastic	Stainless steel	Metal
At a glance				
	• Flush red lens • Polarization filter • Clear back cover for highly visible status indication • 18 mm front and base mount • Power and status indicator	• Low-cost cylindrical M18 sensor with extra short housing • Potentiometer for adjustment of switching threshold • Five different housing styles • Variety of plastic and metal housing styles, with straight or right angle optics • Bright and highly visible PinPoint-LED • Special flush type, one-piece metal housing • Highly visible signal indicator LED • IP 67 rating	• Field-tested resistance to acidic and alkaline cleaning and disinfecting agents • Corrosion-resistant stainless steel housing 316L, certified by ECOLAB and JohnsonDiversey • IP 69K-rated housing is resistant to wash down environments • Available as complete family including proximity, BGS, retro-reflective and through-beam • 3 mm chemical resistant sensor lens	• Laser emitter LED enclosed in a cylindrical M18 housing • Laser class 1 • Fast response time • Straight or right-angle housing • Durable metal housing • IP 67 • Small visible light spot to detect small objects
Detailed information	➜ I-692	➜ I-698	➜ I-714	➜ I-724

	V18V	V180-2	W15	Z-Sensor
				
	Cylindrical photoelectric sensors with foolproof touch-teach for washdown areas	Lowest-cost cylindrical photoelectric sensor on the market!	Improve performance and reduce downtime with W15 sensors	Flexible, low-cost presence detection solutions with clear housings
	Axial / radial	Axial / radial	–	–
	–	16.2 mm x 48.5 mm x 31.9 mm	13.6 mm x 45.2 mm x 31.7 mm	
	0 mm ... 900 mm	1 mm ... 1.100 mm	4 mm ... 350 mm	0 mm ... 155 mm
	0,035 m ... 5 m	0,05 m ... 7 m	0,035 m ... 5 m	0,1 m ... 4,8 m
	0 m ... 20 m	0 m ... 28 m	0 m ... 5 m	–
	LED	LED	PinPoint LED / LED	LED
	Visible red light	Visible red light	Visible red light / Infrared light	Infrared light / visible red light
	IP 67	IP 67	IP 66, IP 67, IP 67	IP 67
	Metal/Plastic	Metal/Plastic	Plastic	Plastic
	• IP 69K-rated cylindrical photoelectric sensors in M18 stainless steel housing • Resistant to all common cleaning agents and certified by independent institutes • Extended temperature range: +85° C (long-term), +100°C / 15 min. (short-term) • Touch (smart) teach-in adjustment • All sensor materials, including the housing, LED and lens are resistant to chemicals • IP 69K and IP 68 according to DIN 40050 • Laser-etched part numbers • Ecolab & JohnsonDiversey certified for chemical resistance	• Low-cost M18 housing sensor on the market • Long sensing distances: 100 mm, 400 mm, 800 mm (proximity sensor), 300 mm (proximity sensor with BGS), 6 m (retro-reflective sensor) and 20 m (through-beam sensor) • Bright power and signal LEDs with 360° visibility • Wide product portfolio solves a broad range of applications • High switching frequencies up to 1000 Hz • Available in a metal housing for applications in harsh environments • Optical axis selectively axial or radial (90°)	• M18 front mount using plastic nut or snap ring, side assembly with 24.1 mm through holes • Flush mounting possible using the snap ring • Transparent back cover • Best-in-class background suppression and red PinPoint LED • High immunity to ambient light • Highly visible LED indicators	• Economical design with background suppression, retro-reflective or energetic variants available; non-adjustable • Compact, transparent housing with 360° status indication • M18 front mount and 24-25.4 mm slotted side through holes compatible with competitor devices • Spherical eyeball-style housing with 24 mm ball mount allows for infinite adjustability (depending on type) • Connection system: straight or angled cable outlet (60°) or M12 or M8 connector outlet • IP 67 enclosure rating for harsh environments
	➜ I-732	➜ I-742	➜ I-766	➜ I-776

Hybrid sensor with integrated M18 threads for front and base mounting

Product description

The industry-proven ELF-3 family of hybrid photoelectric sensors offers basic functions for presence detection applications. These low-cost sensors provide a variety of features that can be optimized for customers to reduce installation and procurement costs. They are ideal for standard, short-range applications, such as conveyor systems, vending machines, packaging lines, or other simple on/off applications. ASIC (application-specific integrated circuit) technology, which is proprietary to SICK, guarantees the best optical performance. ELF-3 sensors are available in background suppression, energetic and retro-reflective variants. The background suppression variant offers a 50 mm fixed sensing distance. The energetic variant has a 155 mm sensing range and the retro-reflective variant has a 5 m sensing range. A clear back cover provides highly visible power and status indication. These multi-functional sensors are able to integrate optical and electronic elements into different housings. The ELF-3 comes with integrated M18 threads for front and base mounting.

At a glance

- Flush red lens
- Polarization filter
- Clear back cover for highly visible status indication
- 18 mm front and base mount
- Power and status indicator

Your benefits

- A wide range of customizable options reduces material and labor costs
- Flush red lens provides an increased sensing range for a broader range of application possibilities
- IP 67-rated housing has a longer service life that stands up to harsh environments, reducing maintenance time and costs
- Highly visible status/power indicator provides quick and easy troubleshooting from a distance
- M18 front and base mounting ensures quick and easy installation
- Small sensor footprint easily fits into applications with limited space

Additional information

→ **www.mysick.com/en/ELF3**

For more information, just enter the link or scan the QR code and get direct access to technical data, CAD design models, operating instructions, software, application examples and much more.

Detailed technical data

Features

	ET3	EL3	EL4
Sensor principle	Photoelectric proximity sensor	Photoelectric retro-reflective sensor	
Detection principle	Background suppression / energetic (depending on type)	–	
Dimensions (W x H x D)	23.8 mm x 45.4 mm x 33.6 mm		
Housing design (light emission)	Hybrid		
Thread diameter (housing)	M18		
Sensing range max.	0 mm ... 155 mm [1] (depending on type)	0.1 m ... 4.8 m [2]	
Sensing range	0 mm ... 155 mm [1] (depending on type)	0.1 m ... 3 m [2]	
Type of light	Infrared light / visible red light (depending on type)	Visible red light	
Light source [3]	LED		
Wave length			
Infrared light	880 nm	–	
Visible red light	660 nm		
Special feature	Focused optics	–	

[1] Object with 90 % reflectance (referred to standard white, DIN 5033)
[2] PL80A.
[3] Average service life of 100,000 h at T_A = +25 °C.

Mechanics/electronics

	ET3	EL3	EL4
Supply voltage [1]	10 V DC ... 30 V DC		
Ripple [2]	< 5 V_{pp}		
Power consumption [3]	< 20 mA		
Output type	PNP		
Switching mode	Light switching / Dark-switching (depending on type)		
Output current $I_{max.}$	50 mA		
Switching frequency [4]	200 Hz	400 Hz	
Connection type [5]	Cable, 2 m		
Circuit protection	A [6], D [7]		
Protection class [8]	III		
Weight	0.036 kg, 0.08 lbs		
Polarisation filter	–	✔	
Housing material	Glass fiber reinforced ABS plastic		
Enclosure rating	IP 67		
Ambient operating temperature	–25 °C ... +50 °C		
Ambient storage temperature	–40 °C ... +70 °C		

[1] Limit values.
[2] May not exceed or fall short of V_S tolerances.
[3] Without load.
[4] With light/dark ratio 1:1.
[5] Do not bend below 0 °C.
[6] A = V_S connections reverse-polarity protected.
[7] D = outputs overcurrent and short-circuit protected.
[8] Reference voltage: 50 V DC.

Ordering information

Other models available at www.mysick.com/en/ELF3

ET3

- **Sensor principle:** photoelectric proximity sensor
- **Output type:** PNP
- **Connection:** cable, 3-wire, 2 m, PVC

Detection principle	Type of light	Sensing range max. [1]	Light spot size (distance)	Switching mode	Connection diagram	Model name	Part no.
Background suppression	Infrared light	0 mm ... 50 mm	10.5 mm x 10.5 mm (50 mm)	Light switching	Cd-043	ET3-P3215	1045187
				Dark-switching	Cd-043	ET3-F3215	1045189
Energetic	Visible red light	5 mm ... 60 mm	8 mm x 8 mm (60 mm)	Light switching	Cd-043	ET3-P2215	1045195
				Dark-switching	Cd-043	ET3-F2215	1045196
	Infrared light	1 mm ... 100 mm	20 mm x 20 mm (100 mm)	Light switching	Cd-043	ET3-P4215	1045191
				Dark-switching	Cd-043	ET3-F4215	1045193
		5 mm ... 155 mm	31 mm x 31 mm (150 mm)	Light switching	Cd-043	ET3-P5215	1045199
				Dark-switching	Cd-043	ET3-F5215	1045200

[1] Object with 90 % reflectance (referred to standard white, DIN 5033)

EL3

- **Sensor principle:** photoelectric retro-reflective sensor
- **Output type:** PNP
- **Connection:** cable, 3-wire, 2 m, PVC

Type of light	Sensing range max. [1]	Light spot size (distance)	Switching mode	Connection diagram	Model name	Part no.
Visible red light	0.1 m ... 4.8 m	125 mm x 125 mm (1 m)	Light switching	Cd-043	EL3-P2415	1043960
			Dark-switching	Cd-043	EL3-F2415	1043961

[1] PL80A.

EL4

- **Sensor principle:** photoelectric retro-reflective sensor
- **Output type:** PNP
- **Connection:** cable, 3-wire, 2 m, PVC

Type of light	Sensing range max. [1]	Light spot size (distance)	Switching mode	Connection diagram	Model name	Part no.
Visible red light	0.1 m ... 4.8 m	125 mm x 125 mm (1 m)	Light switching	Cd-043	EL4-P2415	1044683
			Dark-switching	Cd-043	EL4-F2415	1044684

[1] PL80A.

Dimensional drawings

Dimensions in mm (inch)

ET3, EL3

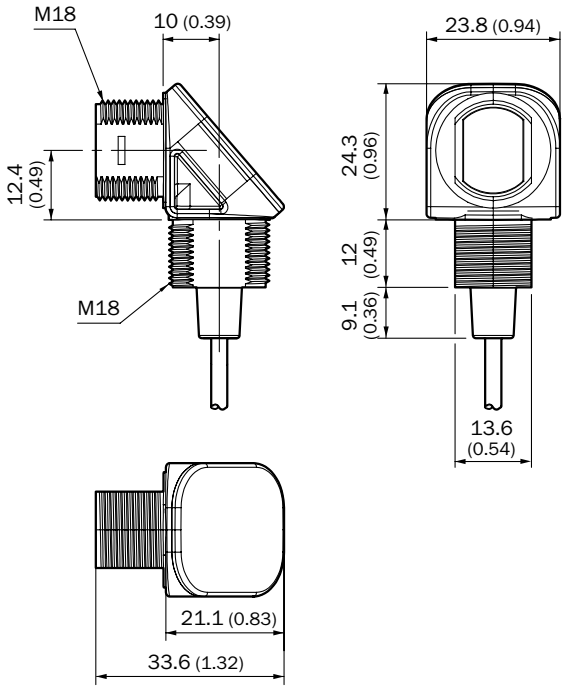

EL4

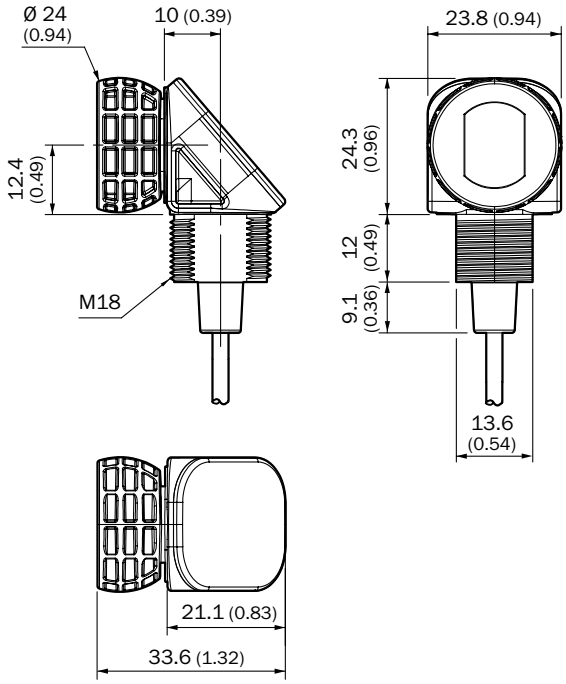

Characteristic curves

EL3

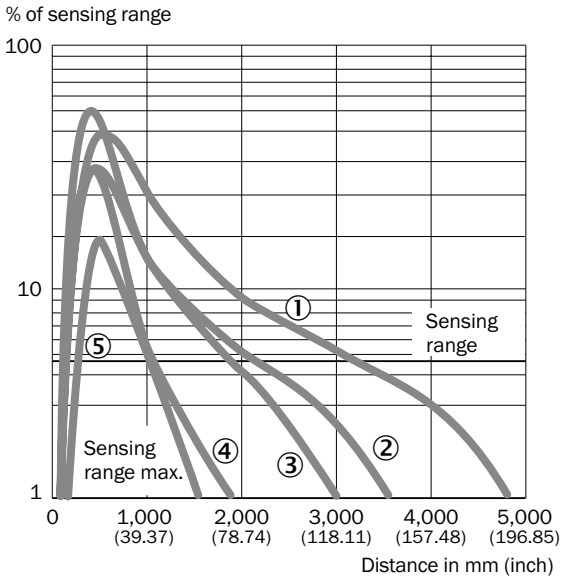

① PL80A
② P250
③ PL40A
④ PL20A
⑤ Reflective tape REF-Plus

Bar diagrams

ET3, 50 mm

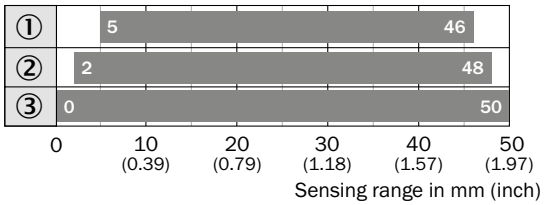

① Sensing range on black, 6 % remission
② Sensing range on gray, 18 % remission
③ Sensing range on white, 90 % remission

ET3, 60 mm

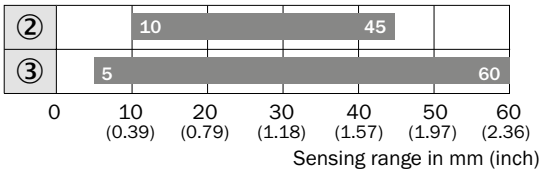

② Sensing range on gray, 18 % remission
③ Sensing range on white, 90 % remission

ET3, ET4, 100 mm

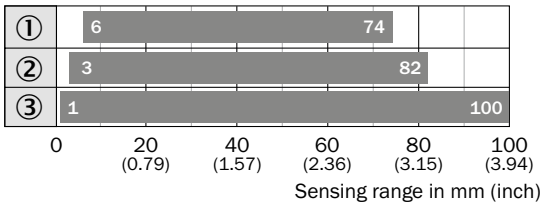

① Sensing range on black, 6 % remission
② Sensing range on gray, 18 % remission
③ Sensing range on white, 90 % remission

ET3, 150 mm

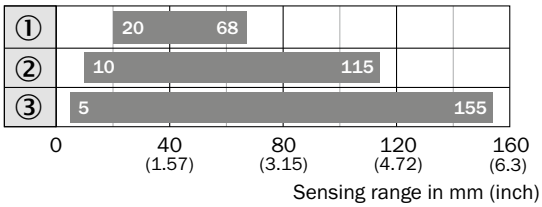

① Sensing range on black, 6 % remission
② Sensing range on gray, 18 % remission
③ Sensing range on white, 90 % remission

EL3, EL4

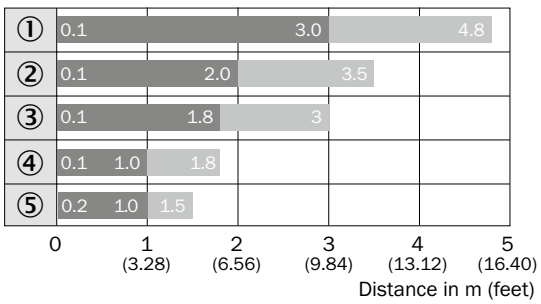

① PL80A
② P250
③ PL40A
④ PL20A
⑤ Reflective tape REF-Plus

Connection diagram

Cd-043

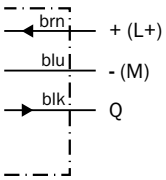

Recommended accessories

Reflectors

Angular

- **Description:** Rectangular, screw connection

Figure	Material	Dimensions	Model name	Part no.
	PMMA/ABS	47 mm x 47 mm	P250	5304812
		38 mm x 15 mm	PL20A	1012719
		56 mm x 28 mm	PL30A	1002314
		37 mm x 56 mm	PL40A	1012720
		80 mm x 80 mm	PL80A	1003865

Reflective tape

Figure	Description	Dimensions	Model name	Part no.
	Self-adhesive	50 mm x 60 mm	REF-IRF-56	5314244

Round

Figure	Description	Material	Diameter	Model name	Part no.
	Round, screw connection	PMMA/ABS	80 mm	C110A	5304549

→ **For additional accessories, please see page L-861**

Round, short and economically unbeatable

PinPoint by SICK

Additional information

Product description

The GR18S family of photoelectric sensors in cylindrical M18-housings has a special shortened design and offers an optimal price/performance ratio. It can be used universally in many applications thanks to five different housing designs. PinPoint LEDs, plastic and metal housing versions as well as status indicators that are easily visible from all angles round off the sensor family's features. One highlight is the fully-flush metal variant, which has been especially designed for use in harsh industrial environments found in handling and warehousing systems.

At a glance

- Low-cost cylindrical M18 sensor with extra short housing
- Potentiometer for adjustment of switching threshold
- Five different housing styles
- Variety of plastic and metal housing styles, with straight or right angle optics
- Bright and highly visible PinPoint-LED
- Special flush type, one-piece metal housing
- Highly visible signal indicator LED
- IP 67 rating

Your benefits

- Space-saving solution due to short housing
- Flexible mounting options due to versatile housing styles
- Potentiometer for adjustment of switching threshold allows detection of transparent objects.
- Easy installation and precise detection due to PinPoint LED
- Reduced maintenance costs due to high tightening torque of single piece flush metal housing
- Rugged and reliable with proven SICK technology
- Highly visible signal indicator LED saves maintenance and commissioning time

→ **www.mysick.com/en/GR18S**

For more information, just enter the link or scan the QR code and get direct access to technical data, CAD design models, operating instructions, software, application examples and much more.

Detailed technical data

Features

	GRTE18S	GRL18S	GRL18SG	GRSE18S
Sensor principle	Photoelectric proximity sensor	Photoelectric retro-reflective sensor		Through-beam photoelectric sensor
Detection principle	Energetic	Standard optics		–
Housing design (light emission)	Cylindrical, straight / cylindrical, straight, fully flush; Cylindrical, angled / cylindrical, angled, fully flush (depending on type)			
Sensing range max.	3 mm ... 550 mm [1] (depending on type)	0.03 m ... 7.2 m [2]		0 m ... 15 m
Sensing range	5 mm ... 400 mm [1] (depending on type)	0.06 m ... 6 m [2]		0 m ... 10 m
Type of light	Visible red light			
Light source [3]	PinPoint LED			
Wave length	650 nm			
Adjustment	Potentiometer, 270 °	–	Potentiometer, 270 °	–
Special feature	–		Detection of transparent objects	–

[1] Object with 90 % reflectance (referred to standard white, DIN 5033)
[2] PL80A.
[3] Average service life of 100,000 h at T_A = +25 °C.

Mechanics/electronics

	GRTE18S	GRL18S	GRL18SG	GRSE18S
Supply voltage [1]	10 V DC ... 30 V DC			
Ripple [2]	± 5 V_{pp}			
Power consumption	≤ 30 mA			
Output type	PNP/NPN (depending on type)			
Switching mode	Light switching/dark-switching (depending on type)			
Output current $I_{max.}$ [3]	100 mA			
Response time [4]	< 1,000 µs	< 500 µs		
Switching frequency	500 Hz	1,000 Hz		
Connection type	Male connector, M12/Cable, 2 m [5] (depending on type)			
Circuit protection	A [6], B [7], D [8]			
Protection class	III			
Polarisation filter	–	✔		–
Enclosure rating	IP 67			
Ambient operating temperature [9]	–25 °C ... +55 °C		–25 °C ... +55 °C [10]	–25 °C ... +55 °C
Ambient storage temperature	–40 °C ... +70 °C			

[1] Limit values, operation in short-circuit protected network max. 8 A.
[2] May not exceed or fall short of V_S tolerances.
[3] At Vs > 24 V or ambient temperature > 49 °C, I_A max = 50 mA.
[4] Signal transit time with resistive load.
[5] Do not bend below 0 °C.
[6] A = V_S connections reverse-polarity protected.
[7] B = inputs and output reverse-polarity protected.
[8] D = outputs overcurrent and short-circuit protected.
[9] At U_v <=24V and I_A<50mA.
[10] Temperature stability after adjustment +/-10°C.

Ordering information

Other models available at www.mysick.com/en/GR18S

GRTE18S, metal

- **Sensor principle:** photoelectric proximity sensor
- **Detection principle:** energetic
- **Adjustment:** potentiometer, 270 °

Housing design	Sensing range max. [1]	Light spot size (distance)	Output type	Switching mode	Connection	Connection diagram	Model name	Part no.
Axial	3 mm ... 115 mm	Ø 8 mm (100 mm)	PNP	Light switching	Connector M12, 3-pin	Cd-045	GRTE18S-P2312	1058204
					Cable, 3-wire, 2 m, PVC	Cd-044	GRTE18S-P1312	1058203
			NPN	Light switching	Connector M12, 3-pin	Cd-045	GRTE18S-N2312	1059408
					Cable, 3-wire, 2 m, PVC	Cd-044	GRTE18S-N1312	1058201
	5 mm ... 550 mm	Ø 9 mm (400 mm)	PNP	Light switching	Cable, 3-wire, 2 m, PVC	Cd-044	GRTE18S-P1342	1058205
					Connector M12, 3-pin	Cd-045	GRTE18S-P2342	1058200
			NPN	Light switching	Cable, 3-wire, 2 m, PVC	Cd-044	GRTE18S-N1342	1058202
					Connector M12, 3-pin	Cd-045	GRTE18S-N2342	1059482
Axial, fully flush	3 mm ... 115 mm	Ø 8 mm (100 mm)	PNP	Light switching	Connector M12, 3-pin	Cd-045	GRTE18S-P231Z	1059436
				Dark-switching	Connector M12, 3-pin	Cd-045	GRTE18S-F231Z	1059435
			NPN	Light switching	Connector M12, 3-pin	Cd-045	GRTE18S-N231Z	1059432
				Dark-switching	Connector M12, 3-pin	Cd-045	GRTE18S-E231Z	1059409
	5 mm ... 550 mm	Ø 9 mm (400 mm)	PNP	Light switching	Connector M12, 3-pin	Cd-045	GRTE18S-P234Z	1059487
				Dark-switching	Connector M12, 3-pin	Cd-045	GRTE18S-F234Z	1059486
			NPN	Light switching	Connector M12, 3-pin	Cd-045	GRTE18S-N234Z	1059484
				Dark-switching	Connector M12, 3-pin	Cd-045	GRTE18S-E234Z	1059483
Radial, fully flush	3 mm ... 115 mm	Ø 8 mm (100 mm)	PNP	Light switching	Connector M12, 3-pin	Cd-045	GRTE18S-P231X	1059440
				Dark-switching	Connector M12, 3-pin	Cd-045	GRTE18S-F231X	1059438
	5 mm ... 550 mm	Ø 9 mm (400 mm)	PNP	Light switching	Connector M12, 3-pin	Cd-045	GRTE18S-P234X	1059489
				Dark-switching	Connector M12, 3-pin	Cd-045	GRTE18S-F234X	1059488

[1] Object with 90 % reflectance (referred to standard white, DIN 5033).

GRTE18S, plastic

- **Sensor principle:** photoelectric proximity sensor
- **Detection principle:** energetic
- **Adjustment:** potentiometer, 270 °

Housing design	Sensing range max. [1]	Light spot size (distance)	Output type	Switching mode	Connection	Connection diagram	Model name	Part no.
Axial	3 mm ... 115 mm	Ø 8 mm (100 mm)	PNP	Light switching	Cable, 3-wire, 2 m, PVC	Cd-044	GRTE18S-P1317	1058195
					Connector M12, 3-pin	Cd-045	GRTE18S-P2317	1058196
			NPN	Light switching	Cable, 3-wire, 2 m, PVC	Cd-044	GRTE18S-N1317	1058194
					Connector M12, 3-pin	Cd-045	GRTE18S-N2317	1059378
	5 mm ... 550 mm	Ø 9 mm (400 mm)	PNP	Light switching	Cable, 3-wire, 2 m, PVC	Cd-044	GRTE18S-P1347	1058197
					Connector M12, 3-pin	Cd-045	GRTE18S-P2347	1058193
			NPN	Light switching	Cable, 3-wire, 2 m, PVC	Cd-044	GRTE18S-N1347	1058393
					Connector M12, 3-pin	Cd-045	GRTE18S-N2347	1059441
Radial	3 mm ... 115 mm	Ø 8 mm (100 mm)	PNP	Light switching	Connector M12, 3-pin	Cd-045	GRTE18S-P2319	1059407
				Dark-switching	Connector M12, 3-pin	Cd-045	GRTE18S-F2319	1059406
	5 mm ... 550 mm	Ø 9 mm (400 mm)	PNP	Light switching	Connector M12, 3-pin	Cd-045	GRTE18S-P2349	1059481
				Dark-switching	Connector M12, 3-pin	Cd-045	GRTE18S-F2349	1059480

[1] Object with 90 % reflectance (referred to standard white, DIN 5033).

GRL18S, metal

- **Sensor principle:** photoelectric retro-reflective sensor
- **Detection principle:** standard optics

Housing design	Sensing range max. [1]	Light spot size (distance)	Output type	Switching mode	Connection	Connection diagram	Model name	Part no.
Axial	0.03 m ... 7.2 m	Ø 175 mm (7 m)	PNP	Light switching	Cable, 3-wire, 2 m, PVC	Cd-044	GRL18S-P1331	1059542
					Connector M12, 3-pin	Cd-045	GRL18S-P2331	1058199
				Dark-switching	Cable, 3-wire, 2 m, PVC	Cd-044	GRL18S-F1331	1059541
					Connector M12, 3-pin	Cd-045	GRL18S-F2331	1058198
			NPN	Light switching	Cable, 3-wire, 2 m, PVC	Cd-044	GRL18S-N1331	1059538
				Dark-switching	Cable, 3-wire, 2 m, PVC	Cd-044	GRL18S-E1331	1059537
Axial, fully flush	0.03 m ... 7.2 m	Ø 175 mm (7 m)	PNP	Light switching	Connector M12, 3-pin	Cd-045	GRL18S-P233Y	1058207
				Dark-switching	Connector M12, 3-pin	Cd-045	GRL18S-F233Y	1058206
Radial, fully flush	0.03 m ... 7.2 m	Ø 175 mm (7 m)	PNP	Light switching	Connector M12, 3-pin	Cd-045	GRL18S-P233W	1058210
				Dark-switching	Connector M12, 3-pin	Cd-045	GRL18S-F233W	1058209

[1] PL80A.

GRL18S, plastic

- **Sensor principle:** photoelectric retro-reflective sensor
- **Detection principle:** standard optics

Housing design	Sensing range max. [1]	Light spot size (distance)	Output type	Switching mode	Connection	Connection diagram	Model name	Part no.
Axial	0.03 m ... 7.2 m	Ø 175 mm (7 m)	PNP	Light switching	Cable, 3-wire, 2 m, PVC	Cd-044	GRL18S-P1336	1059534
					Connector M12, 3-pin	Cd-045	GRL18S-P2336	1058192
				Dark-switching	Cable, 3-wire, 2 m, PVC	Cd-044	GRL18S-F1336	1059532
					Connector M12, 3-pin	Cd-045	GRL18S-F2336	1059533
			NPN	Dark-switching	Cable, 3-wire, 2 m, PVC	Cd-044	GRL18S-E1336	1059530
				Light switching	Cable, 3-wire, 2 m, PVC	Cd-044	GRL18S-N1336	1059531
Radial	0.03 m ... 7.2 m	Ø 175 mm (7 m)	PNP	Light switching	Cable, 3-wire, 2 m, PVC	Cd-044	GRL18S-P1338	1059536
					Connector M12, 3-pin	Cd-045	GRL18S-P2338	1058212
				Dark-switching	Cable, 3-wire, 2 m, PVC	Cd-044	GRL18S-F1338	1059535
					Connector M12, 3-pin	Cd-045	GRL18S-F2338	1058211

[1] PL80A.

GRL18SG, metal, clear material detection

- **Sensor principle:** photoelectric retro-reflective sensor
- **Detection principle:** standard optics
- **Adjustment:** potentiometer, 270 °

Housing design	Sensing range max. [1]	Light spot size (distance)	Output type	Switching mode	Connection	Connection diagram	Model name	Part no.
Axial	0.03 m ... 7.2 m	Ø 175 mm (7 m)	PNP	Dark-switching	Connector M12, 3-pin	Cd-045	GRL18SG-F2332	1059555
Axial, fully flush	0.03 m ... 7.2 m	Ø 175 mm (7 m)	PNP	Dark-switching	Connector M12, 3-pin	Cd-045	GRL18SG-F233Z	1059556
Radial, fully flush	0.03 m ... 7.2 m	Ø 175 mm (7 m)	PNP	Dark-switching	Connector M12, 3-pin	Cd-045	GRL18SG-F233X	1059557

[1] PL80A.

GRL18SG, plastic, clear material detection

- **Sensor principle:** photoelectric retro-reflective sensor
- **Detection principle:** standard optics
- **Adjustment:** potentiometer, 270 °

Housing design	Sensing range max. [1]	Light spot size (distance)	Output type	Switching mode	Connection	Connection diagram	Model name	Part no.
Axial	0.03 m ... 7.2 m	Ø 175 mm (7 m)	PNP	Dark-switching	Connector M12, 3-pin	Cd-045	GRL18SG-F2337	1059553
		Ø 175 mm (7 m)	PNP	Dark-switching	Cable, 3-wire, 2 m	Cd-045	GRL18SG-F1337	1062231
Radial	0.03 m ... 7.2 m	Ø 175 mm (7 m)	PNP	Dark-switching	Connector M12, 3-pin	Cd-045	GRL18SG-F2339	1059554

[1] PL80A.

GRSE18S, metal

- **Sensor principle:** through-beam photoelectric sensor

Housing design	Sensing range max.	Light spot size (distance)	Output type	Switching mode	Connection	Connection diagram	Model name	Part no.
Axial	0 m ... 15 m	Ø 250 mm (10 m)	PNP	Light switching	Connector M12, 3-pin	Cd-051	GRSE18S-P2331	1059550
				Dark-switching	Connector M12, 3-pin	Cd-051	GRSE18S-F2331	1059549
			NPN	Dark-switching	Cable, 3-wire, 2 m, PVC	Cd-049	GRSE18S-E1331	1059548
Radial, fully flush	0 m ... 15 m	Ø 250 mm (10 m)	PNP	Light switching	Connector M12, 3-pin	Cd-051	GRSE18S-P233W	1059552
				Dark-switching	Connector M12, 3-pin	Cd-051	GRSE18S-F233W	1059551

GRSE18S, plastic

- **Sensor principle:** through-beam photoelectric sensor

Housing design	Sensing range max.	Light spot size (distance)	Output type	Switching mode	Connection	Connection diagram	Model name	Part no.
Axial	0 m ... 15 m	Ø 250 mm (10 m)	PNP	Light switching	Cable, 3-wire, 2 m, PVC	Cd-049	GRSE18S-P1336	1059545
					Connector M12, 3-pin	Cd-051	GRSE18S-P2336	1058215
				Dark-switching	Cable, 3-wire, 2 m, PVC	Cd-049	GRSE18S-F1336	1059544
					Connector M12, 3-pin	Cd-051	GRSE18S-F2336	1058214
			NPN	Dark-switching	Cable, 3-wire, 2 m, PVC	Cd-049	GRSE18S-E1336	1059543
Radial	0 m ... 15 m	Ø 250 mm (10 m)	PNP	Light switching	Connector M12, 3-pin	Cd-051	GRSE18S-P2338	1059547
				Dark-switching	Connector M12, 3-pin	Cd-051	GRSE18S-F2338	1059546

Dimensional drawings

Dimensions in mm (inch)

GRTE18S, metal, connector, axial

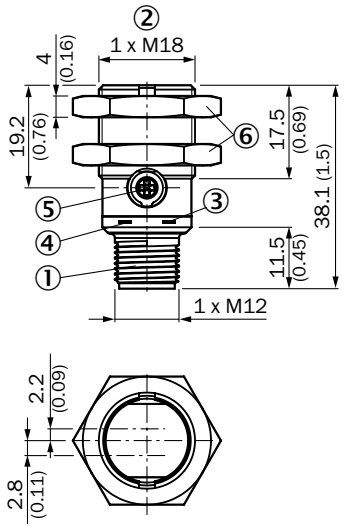

① Connector M12, 3-pin
② Threaded mounting hole M18 x 1
③ LED indicator yellow
④ LED indicator green
⑤ Sensitivity control; Potentiometer 270°
⑥ Fastening nuts (2 x); 24 mm hex, metal

GRTE18S, metal, cable, axial

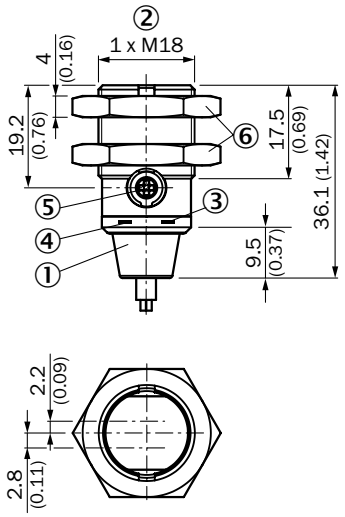

① Connection cable 2 m
② Threaded mounting hole M18 x 1
③ LED indicator yellow
④ LED indicator green
⑤ Sensitivity control; Potentiometer 270°
⑥ Fastening nuts (2 x); 24 mm hex, metal

GRTE18S, metal, connector, axial, fully flush

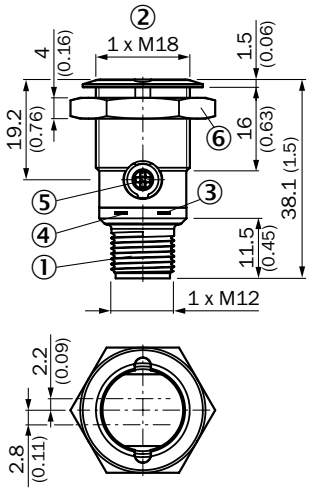

① Connector M12, 3-pin
② Threaded mounting hole M18 x 1
③ LED indicator yellow
④ LED indicator green
⑤ Sensitivity control; Potentiometer 270°
⑥ Fastening nut; 24 mm hex, metal

GRTE18S, metal, connector, radial, fully flush

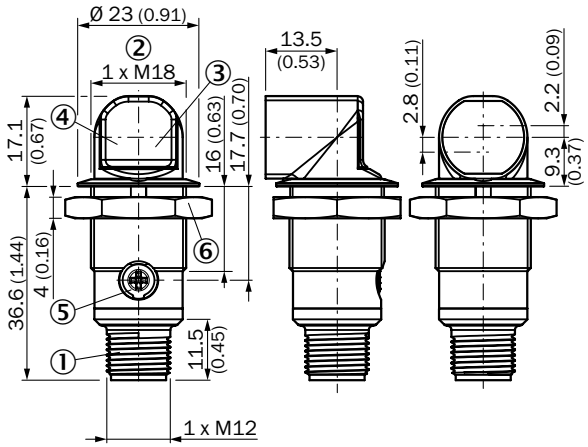

① Connector M12, 3-pin
② Threaded mounting hole M18 x 1
③ LED indicator yellow
④ LED indicator green
⑤ Sensitivity control; Potentiometer 270°
⑥ Fastening nut; 22 mm hex, plastic

GRTE18S, plastic, cable, axial

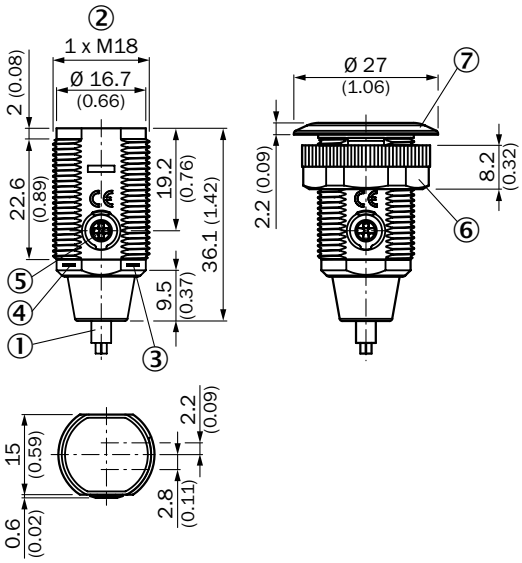

① Connection cable 2 m
② Threaded mounting hole M18 x 1
③ LED indicator yellow
④ LED indicator green
⑤ Sensitivity control; Potentiometer 270°
⑥ Fastening nut; 22 mm hex, plastic
⑦ Mounting ring

GRTE18S, plastic, connector, axial

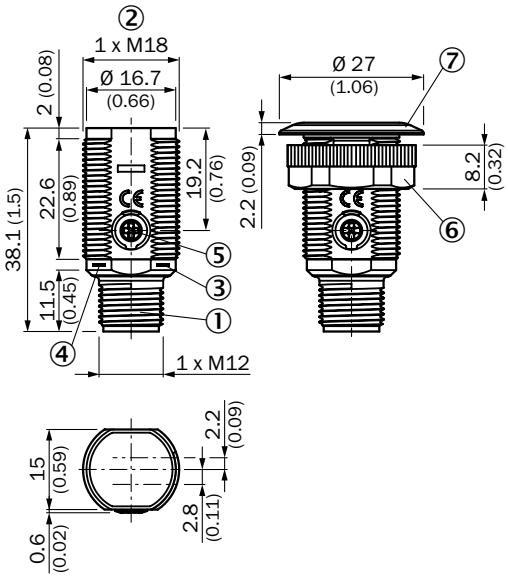

① Connector M12, 3-pin
② Threaded mounting hole M18 x 1
③ LED indicator yellow
④ LED indicator green
⑤ Sensitivity control; Potentiometer 270°
⑥ Fastening nut; 22 mm hex, plastic
⑦ Mounting ring

GRTE18S, plastic, connector, radial

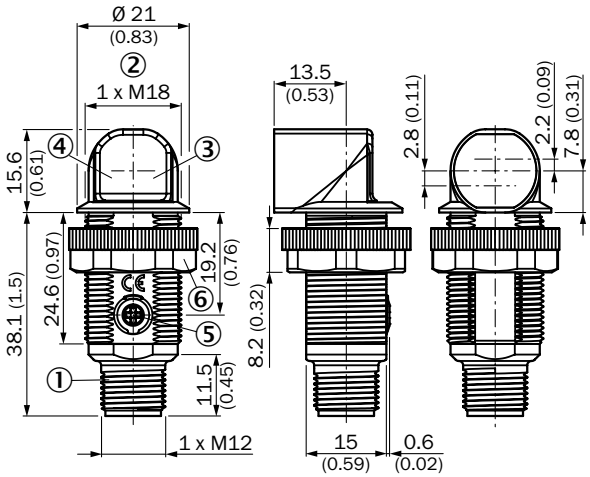

① Connector M12, 3-pin
② Threaded mounting hole M18 x 1
③ LED indicator yellow
④ LED indicator green
⑤ Sensitivity control; Potentiometer 270°
⑥ Fastening nut; 22 mm hex, plastic

GRL18S, GRSE18S, metal, cable, axial

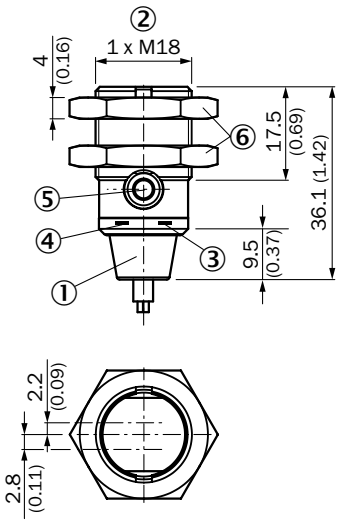

① Connection cable 2 m
② Threaded mounting hole M18 x 1
③ LED indicator yellow
④ LED indicator green
⑤ Dummy plug
⑥ Fastening nuts (2 x); 24 mm hex, metal

GRL18S, GRSE18S, metal, connector, axial

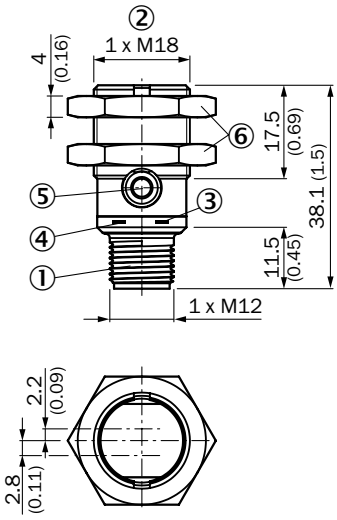

① Connector M12, 3-pin
② Threaded mounting hole M18 x 1
③ LED indicator yellow
④ LED indicator green
⑤ Dummy plug
⑥ Fastening nuts (2 x); 24 mm hex, metal

GRL18S, GRSE18S, metal, connector, axial, fully flush

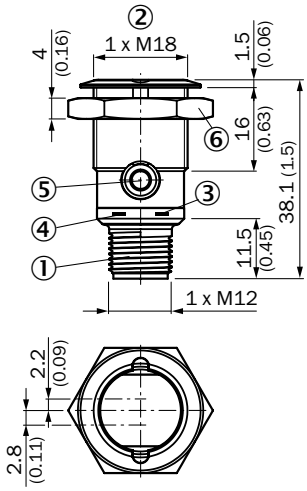

① Connector M12, 3-pin
② Threaded mounting hole M18 x 1
③ LED indicator yellow
④ LED indicator green
⑤ Dummy plug
⑥ Fastening nut; 24 mm hex, metal

GRL18S, GRSE18S, metal, connector, radial, fully flush

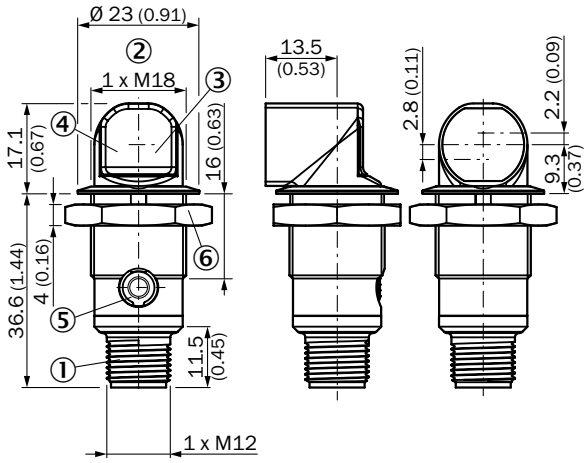

① Connector M12, 3-pin
② Threaded mounting hole M18 x 1
③ LED indicator yellow
④ LED indicator green
⑤ Dummy plug
⑥ Fastening nut; 24 mm hex, metal

GRL18S, GRSE18S, plastic, cable, axial

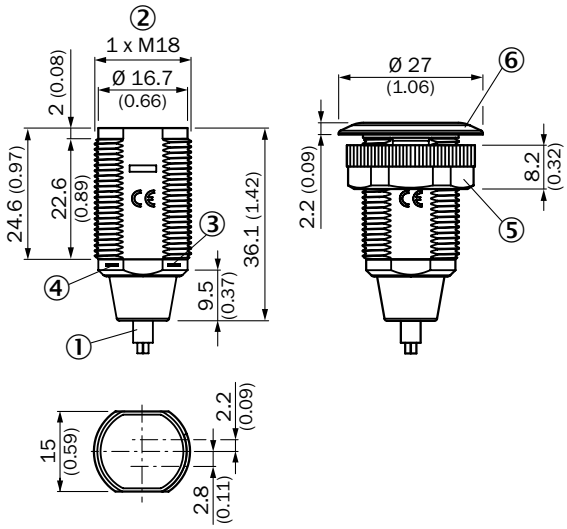

① Connection cable 2 m
② Threaded mounting hole M18 x 1
③ LED indicator yellow
④ LED indicator green
⑤ Fastening nut; 22 mm hex, plastic
⑥ Mounting ring

GRL18S, GRSE18S, plastic, connector, axial

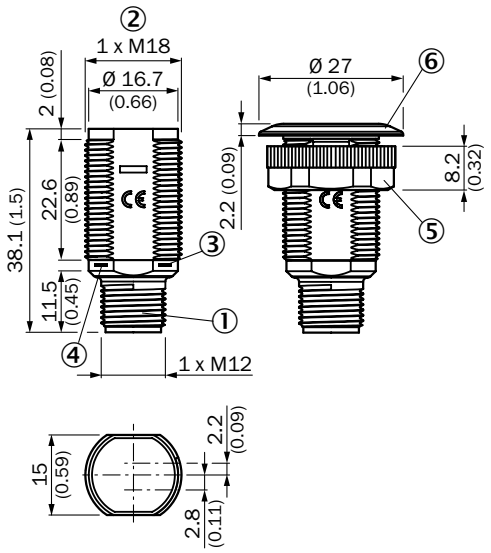

① Connector M12, 3-pin
② Threaded mounting hole M18 x 1
③ LED indicator yellow
④ LED indicator green
⑤ Fastening nut; 22 mm hex, plastic
⑥ Mounting ring

GRL18S, GRSE18S, plastic, cable, radial

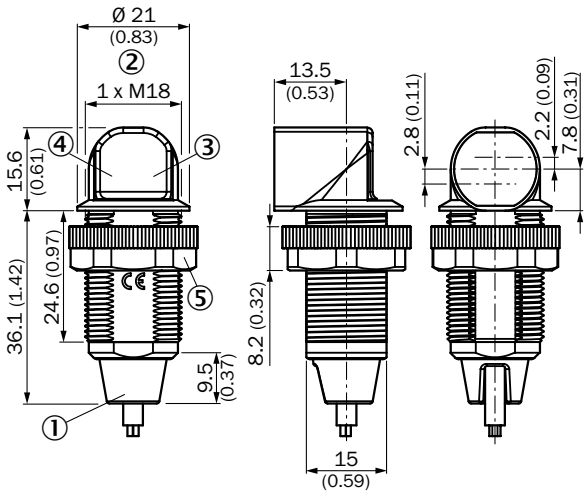

① Connection cable 2 m
② Threaded mounting hole M18 x 1
③ LED indicator yellow
④ LED indicator green
⑤ Fastening nut; 22 mm hex, plastic

GRL18S, GRSE18S, plastic, connector, radial

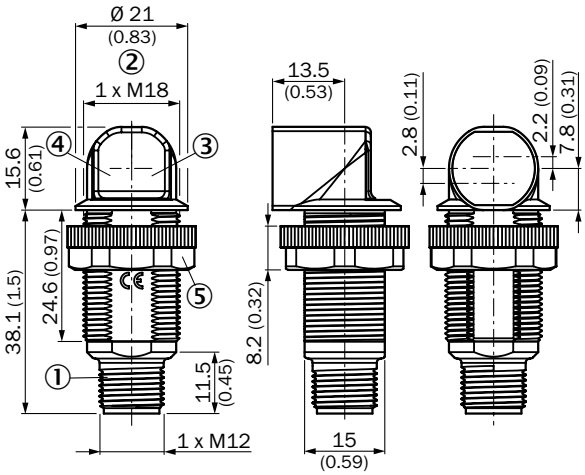

① Connector M12, 3-pin
② Threaded mounting hole M18 x 1
③ LED indicator yellow
④ LED indicator green
⑤ Fastening nut; 22 mm hex, plastic

Characteristic curves

Black-white shift

GRTE18S, 115 mm

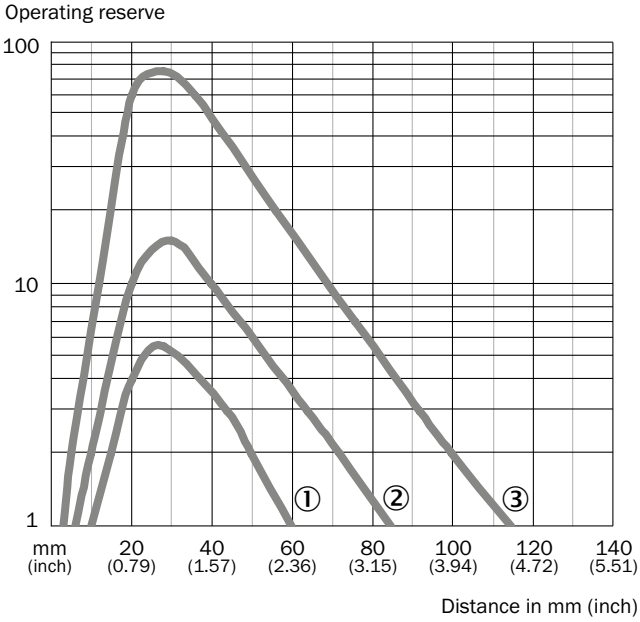

① Sensing range on black, 6 % remission
② Sensing range on gray, 20 % remission
③ Sensing range on white, 90 % remission

GRTE18S, 550 mm

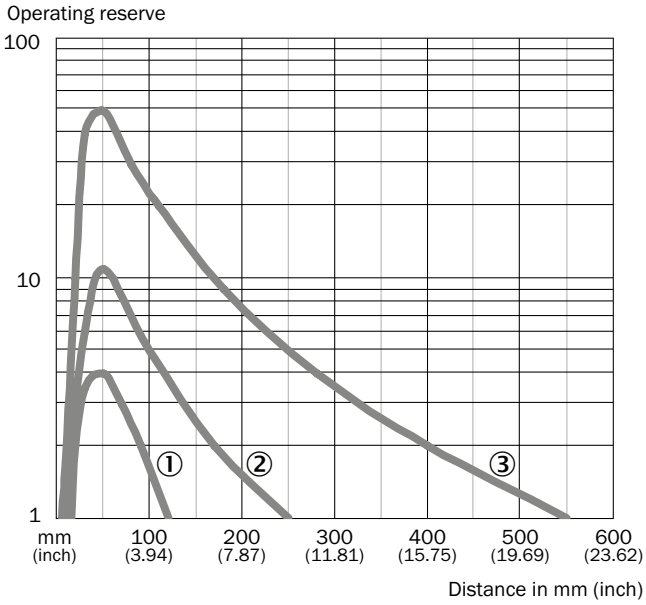

① Sensing range on black, 6 % remission
② Sensing range on gray, 20 % remission
③ Sensing range on white, 90 % remission

Operating reserve

GRL18S

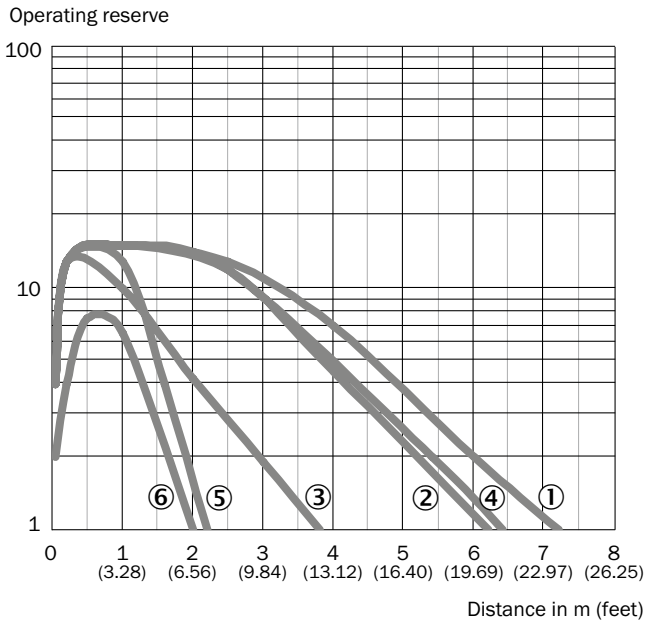

① Reflector type PL80A
② Reflector type PL40A
③ Reflector type PL20A
④ Reflector type P205
⑤ Reflector type PL22-2
⑥ Reflective tape REF-Plus 3436

GRSE18S

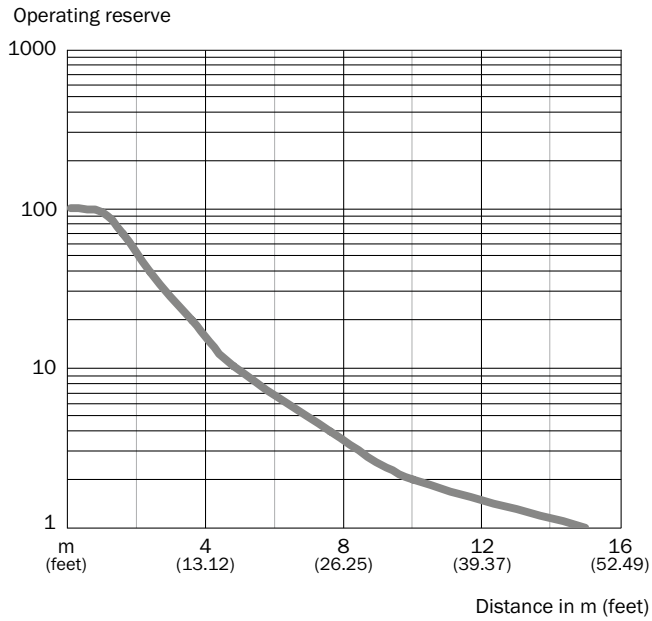

Bar diagrams

GRTE18S, 115 mm

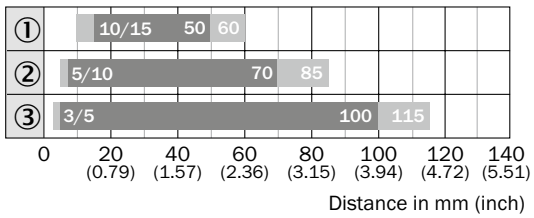

Sensing range Sensing range max.

① Sensing range on black, 6 % remission
② Sensing range on gray, 20 % remission
③ Sensing range on white, 90 % remission

GRTE18S, 550 mm

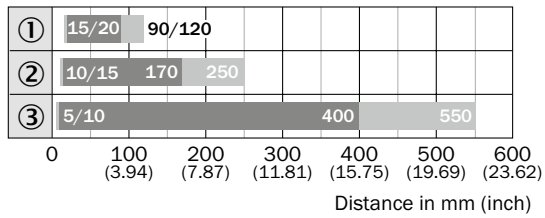

Sensing range Sensing range max.

① Sensing range on black, 6 % remission
② Sensing range on gray, 20 % remission
③ Sensing range on white, 90 % remission

GRL18S

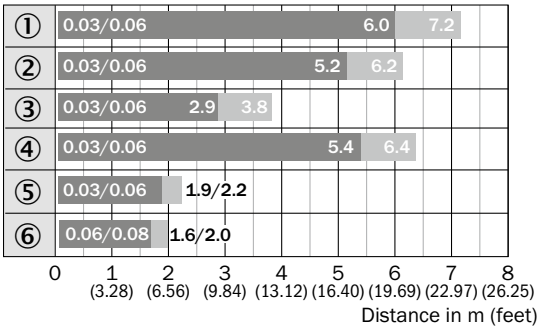

Sensing range Sensing range max.

① Reflector type PL80A
② Reflector type PL40A
③ Reflector type PL20A
④ Reflector type P205
⑤ Reflector type PL22-2
⑥ Reflective tape REF-Plus 3436

GRSE18S

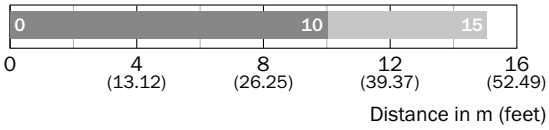

Operating range Sensing range typ. max.

Light spot diameter

GRTE18S, 115 mm

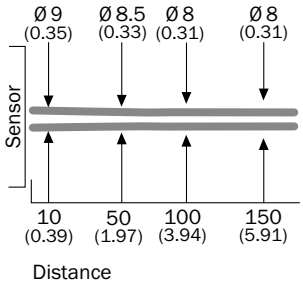

GRTE18S, 550 mm

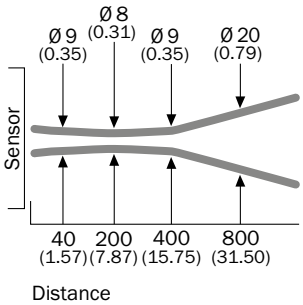

GRL18S

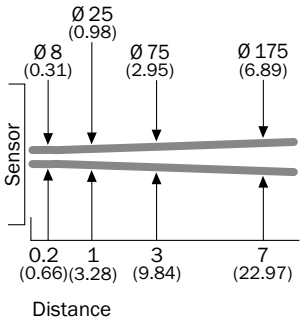

GRSE18S

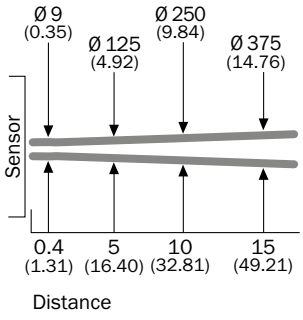

Response curve

GRTE18S, 115 mm

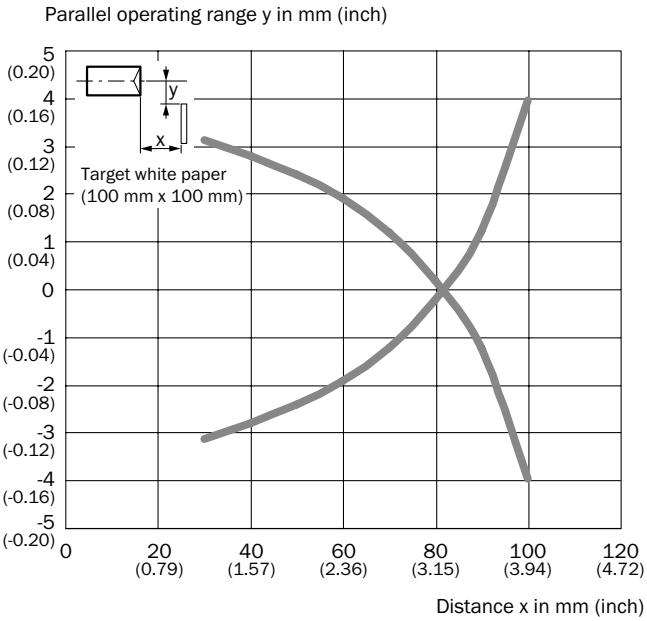

GRTE18S, 550 mm

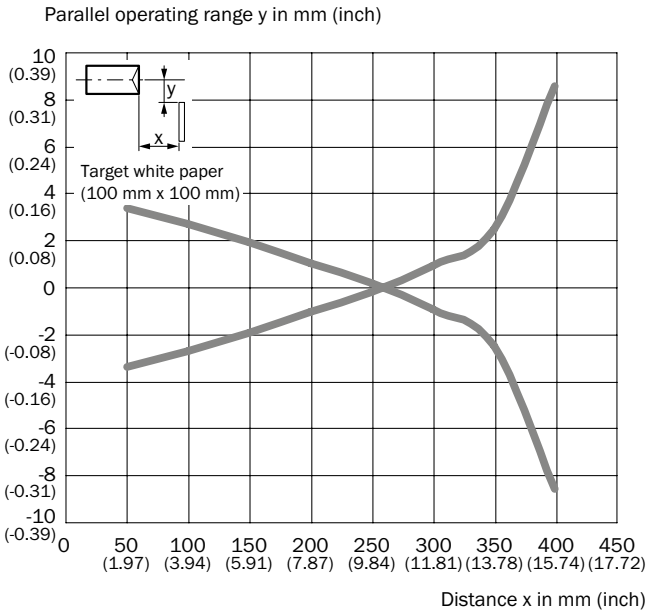

GRL18S

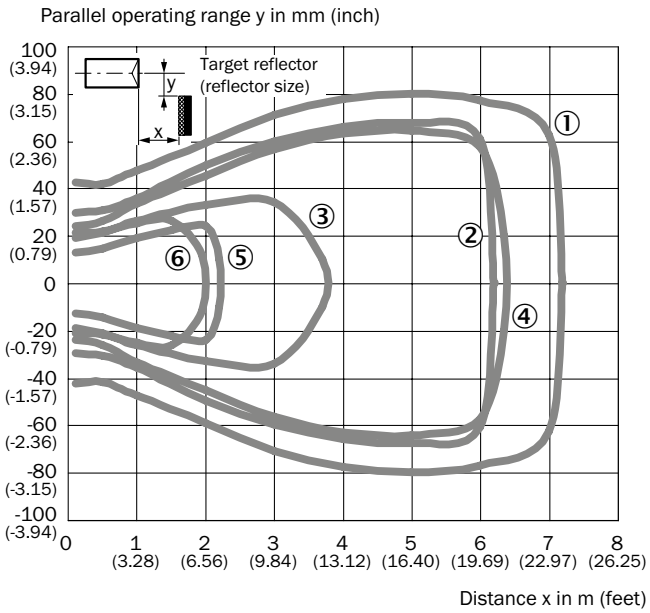

GRSE18S

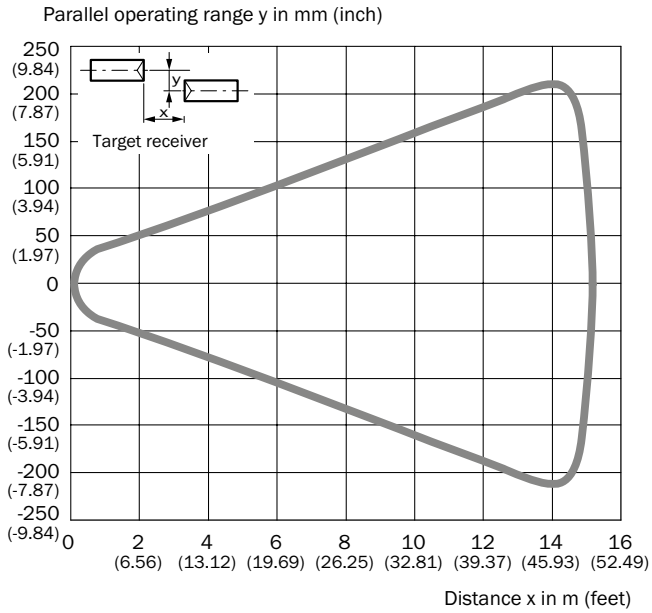

① Reflector type PL80A
② Reflector type PL40A
③ Reflector type PL20A
④ Reflector type P205
⑤ Reflector type PL22-2
⑥ Reflective tape REF-Plus 3436

Connection diagram

Cd-044

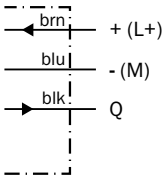

Cd-045

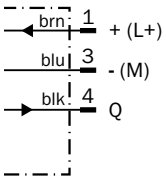

Cd-049

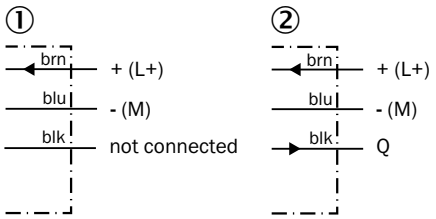

① Sender
② Receiver

Cd-051

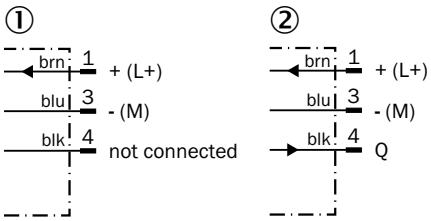

① Sender
② Receiver

Recommended accessories

Plug connectors and cables

Connecting cable (female connector-open)

- **Cable material:** PVC
- **Connector material:** TPU

Figure	Connection type head A	Connection type head B	Connecting cable	Enclosure rating	Model name	Part no.
	Female connector, M12, 4-pin, straight	Cable, open conductor heads	2 m, 4-wire	IP 67	DOL-1204-G02M	6009382
			5 m, 4-wire	IP 67	DOL-1204-G05M	6009866
			10 m, 4-wire	IP 67	DOL-1204-G10M	6010543
	Female connector, M12, 4-pin, angled	Cable, open conductor heads	2 m, 4-wire	IP 67	DOL-1204-W02M	6009383
			5 m, 4-wire	IP 67	DOL-1204-W05M	6009867
			10 m, 4-wire	IP 67	DOL-1204-W10M	6010541

Female connector (ready to assemble)

Figure	Connection type head A	Connection type head B	Connector material	Enclosure rating	Model name	Part no.
	Female connector, M12, 4-pin, straight	Screw-type terminals	PBT	IP 67	DOS-1204-G	6007302
	Female connector, M12, 4-pin, angled	Screw-type terminals	PBT	IP 67	DOS-1204-W	6007303

Male connector (ready to assemble)

Figure	Connection type head A	Connection type head B	Connector material	Enclosure rating	Model name	Part no.
	Male connector, M12, 4-pin, straight	Screw-type terminals	PBT	IP 67	STE-1204-G	6009932
	Male connector, M12, 4-pin, angled	Screw-type terminals	PBT	IP 67	STE-1204-W	6022084

Mounting brackets/plates

Mounting brackets

Figure	Material	Description	Model name	Part no.	GR18S	GR18SG
	Steel, zinc coated	Mounting plate for M18 sensors	BEF-WG-M18	5321870	●	●
		Mounting bracket, M18 thread	BEF-WN-M18	5308446	●	●

Universal bar clamp systems

Figure	Material	Description	Model name	Part no.	GR18S	GR18SG
	Zinc plated steel (sheet), Diecast zinc (clamp)	Plate N06 for universal clamp bracket	BEF-KHS-N06	2051612	●	●

Other mounting accessories

Others

Figure	Description	Model name	Part no.	GR18S	GR18SG
	Mounting tool for “fully flush” variants	BEF-TO-GR18S	4072132	●	●

Reflectors

Angular

Figure	Material	Description	Model name	Part no.	GR18S	GR18SG
	PMMA/ABS	Rectangular, screw connection, 47 mm x 47 mm	P250	5304812	●	●
		Rectangular, screw connection, 38 mm x 15 mm	PL20A	1012719	●	●
		Rectangular, screw connection, 56 mm x 28 mm	PL30A	1002314	●	●
		Rectangular, screw connection, 37 mm x 56 mm	PL40A	1012720	●	●
		Rectangular, screw connection, 80 mm x 80 mm	PL80A	1003865	●	●

Fine triple reflectors

Figure	Material	Description	Model name	Part no.	GR18S	GR18SG
	PMMA/ABS	Fine triple, screw connection, suitable for laser sensors, 47 mm x 47 mm	P250F	5308843	–	●
		Fine triple, screw connection, suitable for laser sensors, 18 mm x 18 mm	PL10F	5311210	–	●
	Plastic	Fine triple, chemically resistant, screw connection, 18 mm x 18 mm	PL10F CHEM	5321636	–	●
	PMMA/ABS	Fine triple, screw connection, suitable for laser sensors, 38 mm x 16 mm	PL20F	5308844	–	●
	Plastic	Fine triple, chemically resistant, screw connection, suitable for laser sensors, 16 mm x 38 mm	PL20F-CHEM	5326089	–	●
	PMMA/ABS	Fine triple, screw connection, suitable for laser sensors, 56 mm x 28 mm	PL30F	5326523	–	●
		Fine triple, screw connection, suitable for laser sensors, 76 mm x 45 mm	PL81-1F	5325060	–	●

Reflective tape

Figure	Description	Model name	Part no.	GR18S	GR18SG
	Suitable for laser sensors, self-adhesive, cut, see alignment note, 56.3 mm x 56.3 mm	REF-AC1000-56	4063030	–	●
	Self-adhesive, 50 mm x 60 mm	REF-IRF-56	5314244	●	●

Round

Figure	Material	Description	Model name	Part no.	GR18S	GR18SG
	PMMA/ABS	Round, screw connection	C110A	5304549	●	●

Special reflectors

Figure	Material	Description	Model name	Part no.	GR18S	GR18SG
	Stainless steel V4A (1.4404, 316L)	Stainless steel reflector, hygienic design, chemically resistant, Enclosure rating IP 69K, D12-adapter shaft, 25 mm x 25 mm	PLH25-D12	2063404	–	●
		Stainless steel reflector, hygienic design, chemically resistant, Enclosure rating IP 69K, M12-adapter thread, 25 mm x 25 mm	PLH25-M12	2063403	–	●
		Stainless steel reflector, wash-down design, chemically resistant, Enclosure rating IP 69K, screw connection, 14 mm x 14 mm	PLV14-A	2063405	–	●

Terminal and alignment brackets

Alignment brackets

Figure	Material	Description	Model name	Part no.	GR18S	GR18SG
	Plastic	Mounting bracket with ball-and-socket	BEF-WN-M18-ST02	5312973	●	●

Terminal brackets

Figure	Material	Description	Model name	Part no.	GR18S	GR18SG
	Plastic (PA12), glass-fiber reinforced	Clamping block for round sensors M18, without fixed stop	BEF-KH-M18	2051481	●	●
		Clamping block for round sensors M18, with fixed stop	BEF-KHF-M18	2051482	●	●
	Plastic (PA12)	Integrated adapter	BEF-WN-MH15-1	4039533	●	●
	Stainless steel	Mounting ring	BEF-WN-MH15-2V	4053358	●	●

→ **For additional accessories, please see page L-861**

Space-saving photoelectric sensors designed for wash down applications

STAIN-LESS STEEL

IP 69K

Product description

The stainless steel housing of the MH15V is specifically designed to operate in very harsh environments that use cleaning methods such as HPLV (High Pressure Low Volume), CIP (Clean-In-Place), and SIP (Sterilize-In-Place). Years of research and collaboration with customers in the food and beverage industry perfected the stainless steel housing design of the MH15V. It is designed to withstand chemical cleaning processes, high humidity, and high-pressure cleaning, all in order to reduce downtime caused by failing sensors in harsh wash down environments.

The MHTB15V's superior resistance to acidic and alkaline cleaning and disinfecting agents is field tested and certified in independent tests by ECOLAB and JohnsonDiversey. The 316L stainless steel housing and 3 mm thick flat sensor lens construction also allow for quick and easy, yet thorough, cleaning. This thorough cleaning reduces the risk of dirt build-up, bacteria growth and process contamination.

At a glance

- Field-tested resistance to acidic and alkaline cleaning and disinfecting agents
- Corrosion-resistant stainless steel housing 316L, certified by ECOLAB und JohnsonDiversey
- IP 69K-rated housing is resistant to wash down environments
- Available as complete family including proximity, BGS, retro-reflective and through-beam
- 3 mm chemical resistant sensor lens

Your benefits

- Field-tested, compact, stainless steel IP 69K design of the MH15V reduces downtime and replacement costs
- 3 mm flat, chemically resistant material of the sensor lens offers a long service life, reducing maintenance time and costs
- Reliable object detection, even in difficult environments reduces miscount and increases machine throughput
- Short M18 housing with flush mounting fits in tight areas, which saves machine space
- ECOLAB and JohnsonDiversey certified MH15V are suitable for hygienic environments, reducing maintenance costs
- Innovative stainless steel mounting accessories provide fast and low-cost installation

Class 2
LISTED 87LL

JohnsonDiversey

ECOLAB

Additional information

→ **www.mysick.com/en/MH15V**

For more information, just enter the link or scan the QR code and get direct access to technical data, CAD design models, operating instructions, software, application examples and much more.

Detailed technical data

Features

	MHTB15V	MHT15V	MHL15V	MHSE15V
Sensor principle	Photoelectric proximity sensor		Photoelectric retro-reflective sensor	Through-beam photo-electric sensor
Detection principle	Background suppres-sion	Energetic	Standard optics	–
Housing design (light emission)	Cylindrical, straight			
Housing length	52.9 mm			
Thread diameter (housing)	M18 x 1			
Sensing range max.	3 mm ... 300 mm [1]	10 mm ... 350 mm [1] (depending on type)	0.035 m ... 5 m [2]	0 m ... 5 m
Sensing range	3 mm ... 300 mm	10 mm ... 250 mm (depending on type)	0.035 m ... 3.5 m [2]	0 m ... 3.8 m
Type of light	Visible red light	Infrared light	Visible red light	
Light source [3]	PinPoint LED	LED		
Angle of dispersion	–	Approx. 4.5°	Approx. 1.5°	
Wave length	650 nm	950 nm	650 nm	
Adjustment	Potentiometer, 270 °		–	

[1] Object with 90 % reflectance (referred to standard white, DIN 5033)
[2] PL80A.
[3] Average service life of 100,000 h at T_A = +25 °C.

Mechanics/electronics

	MHTB15V	MHT15V	MHL15V	MHSE15V
Supply voltage [1]	10 V DC ... 30 V DC			
Ripple [2]	≤ 5 V_{pp}			
Power consumption [3]	≤ 30 mA			
Output type	PNP/NPN (depending on type)			
Switching mode	Dark-switching/Light switching (depending on type)			
Signal voltage PNP HIGH/LOW	Uv - (< 2,9 V) / ca. 0 V			
Signal voltage NPN HIGH/LOW	Uv / < 2,9 V			
Output current $I_{max.}$	≤ 100 mA [4]	≤ 100 mA		
Response time [5]	≤ 0.72 ms	≤ 1.25 ms		≤ 1.4 ms
Switching frequency [6]	700 Hz	400 Hz		350 Hz
Connection type [7]	Male connector, M12			
Circuit protection	A [8], C [9], D [10]			
Protection class	III			
Weight	50 g			100 g
Polarisation filter	–	–	✔	–
Housing material	Stainless steel V4A (1.4404, 316L)			
Optics material	PMMA			
Enclosure rating	IP 67, IP 68, IP 69K			
Ambient operating temperature [11][12]	–25 °C ... +55 °C			
Ambient storage temperature	–25 °C ... +70 °C			

[1] Limit values.
[2] May not exceed or fall short of V_S tolerances.
[3] Without load.
[4] Reduced output current at ambient operating temperatures > 50 °C: IAmax = 50 mA.
[5] Signal transit time with resistive load.
[6] With light/dark ratio 1:1.
[7] With gold plated contact pins.
[8] A = V_S connections reverse-polarity protected.
[9] C = interference suppression.
[10] D = outputs overcurrent and short-circuit protected.
[11] Use at higher ambient temperatures reduce the sender LED lifetime .
[12] +100 °C for 15 minutes.

Ordering information

Other models available at www.mysick.com/en/MH15V

MHTB15V

- **Sensor principle:** photoelectric proximity sensor
- **Detection principle:** background suppression
- **Adjustment:** potentiometer, 270 °

Sensing range max. [1]	Light spot size (distance)	Output type	Switching mode	Connection	Connection diagram	Model name	Part no.
3 mm ... 300 mm	Ø 7 mm (100 mm)	PNP	Dark-switching	Connector M12, 4-pin	Cd-066	MHTB15-P3267V	1047160
			Light switching	Connector M12, 4-pin	Cd-066	MHTB15-P3367V	1046537
		NPN	Dark-switching	Connector M12, 4-pin	Cd-066	MHTB15-N3267V	1047159
			Light switching	Connector M12, 4-pin	Cd-066	MHTB15-N3367V	1046536

[1] Object with 90 % reflectance (referred to standard white, DIN 5033)

MHT15V

- **Sensor principle:** photoelectric proximity sensor
- **Detection principle:** energetic
- **Adjustment:** potentiometer, 270 °

Sensing range max. [1]	Light spot size (distance)	Output type	Switching mode	Connection	Connection diagram	Model name	Part no.
10 mm ... 100 mm	Ø 20 mm (100 mm)	PNP	Dark-switching	Connector M12, 4-pin	Cd-066	MHT15-P3217V	1043805
			Light switching	Connector M12, 4-pin	Cd-066	MHT15-P3317V	1043806
		NPN	Dark-switching	Connector M12, 4-pin	Cd-066	MHT15-N3217V	1043803
			Light switching	Connector M12, 4-pin	Cd-066	MHT15-N3317V	1043804
10 mm ... 350 mm	Ø 50 mm (350 mm)	PNP	Dark-switching	Connector M12, 4-pin	Cd-066	MHT15-P3247V	1043810
			Light switching	Connector M12, 4-pin	Cd-066	MHT15-P3347V	1043811
		NPN	Dark-switching	Connector M12, 4-pin	Cd-066	MHT15-N3247V	1043808
			Light switching	Connector M12, 4-pin	Cd-066	MHT15-N3347V	1043809

[1] Object with 90 % reflectance (referred to standard white, DIN 5033)

MHL15V

- **Sensor principle:** photoelectric retro-reflective sensor
- **Detection principle:** standard optics

Sensing range max. [1]	Light spot size (distance)	Output type	Switching mode	Connection	Connection diagram	Model name	Part no.
0.035 m ... 5 m	Ø 80 mm (3.5 m)	PNP	Dark-switching	Connector M12, 4-pin	Cd-066	MHL15-P3236V	1043814
			Light switching	Connector M12, 4-pin	Cd-066	MHL15-P3336V	1043815
		NPN	Dark-switching	Connector M12, 4-pin	Cd-066	MHL15-N3236V	1043812
			Light switching	Connector M12, 4-pin	Cd-066	MHL15-N3336V	1043813

[1] PL80A.

MHSE15V

- **Sensor principle:** through-beam photoelectric sensor

Sensing range max.	Light spot size (distance)	Output type	Switching mode	Connection	Connection diagram	Model name	Part no.
0 m ... 5 m	Ø 65 mm (4 m)	PNP	Dark-switching	Connector M12, 4-pin	Cd-057	MHSE15-P3236V	1043818
			Light switching	Connector M12, 4-pin	Cd-057	MHSE15-P3336V	1043819
		NPN	Dark-switching	Connector M12, 4-pin	Cd-057	MHSE15-N3236V	1043816
			Light switching	Connector M12, 4-pin	Cd-057	MHSE15-N3336V	1043817

Dimensional drawings

Dimensions in mm (inch)

MHTB15V

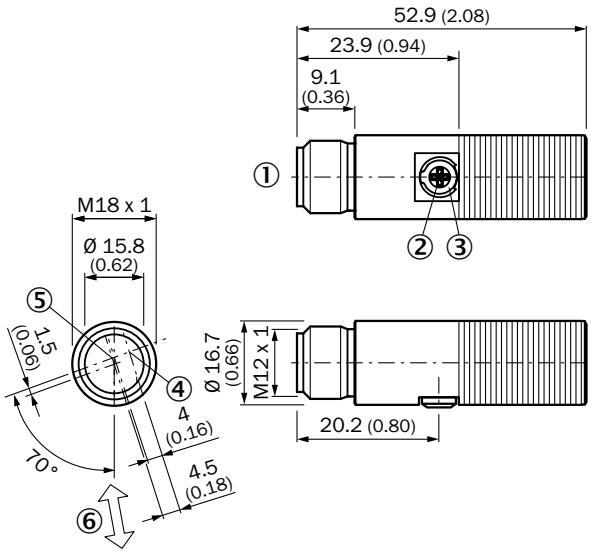

① Connector M12, 4-pin
② Sensing range adjustment: potentiometer, 270°
③ Status indicator LED, yellow: Status of received light beam
④ Optical axis, sender
⑤ Optical axis, receiver
⑥ Standard direction of the material being detected

MHT15V

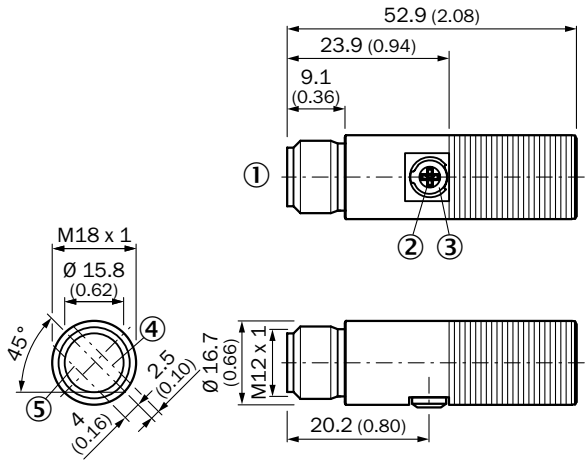

① Connector M12, 4-pin
② Sensitivity adjustment 270°
③ Yellow LED indicator,-lights continuously: Light reception> reserve factor 1.3-blinks: Light reception, reserve factor > 1.0 ... < 1.3
④ Optical axis, sender
⑤ Optical axis, receiver

MHL15V

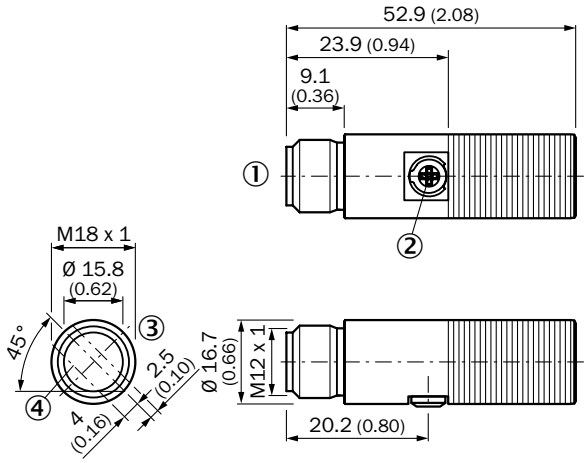

① Connector M12, 4-pin
② Yellow LED indicator,-lights continuously: Light reception> reserve factor 1.5-blinks: Light reception, reserve factor > 1 ... < 1.5
③ Optical axis, sender
④ Optical axis, receiver

MHSE15V

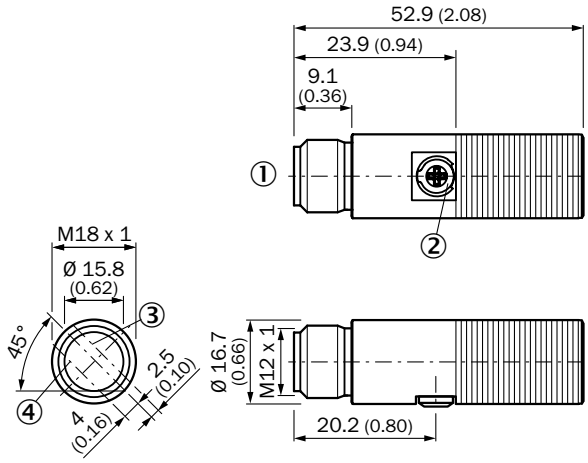

① Connector M12, 4-pin
② Yellow LED indicator– lights continuously: Light reception, Reserve factor > 1
③ Optical axis, sender
④ Optical axis, receiver

Characteristic curves

Black-white shift

MHTB15V

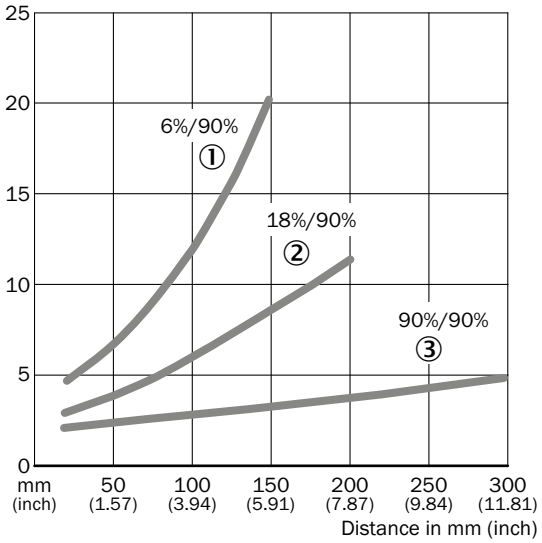

① Sensing range on black, 6 % remission
② Sensing range on gray, 18 % remission
③ Sensing range on white, 90 % remission

MHT15V, 100 mm

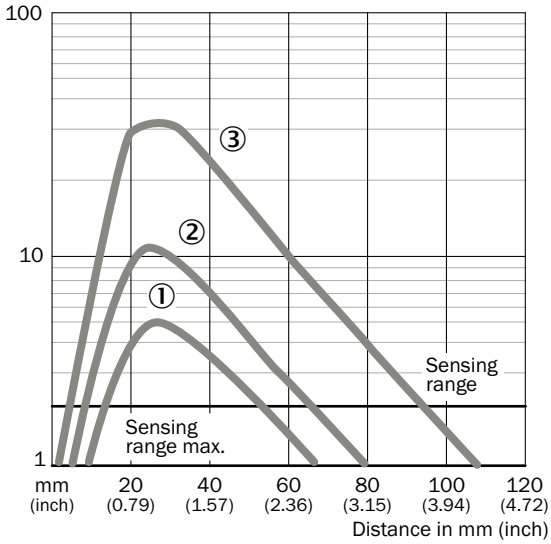

① Sensing range on black, 6 % remission
② Sensing range on gray, 18 % remission
③ Sensing range on white, 90 % remission

MHT15V, 350 mm

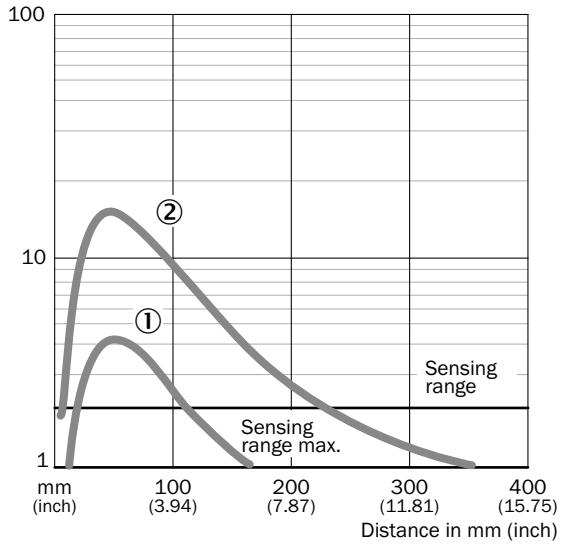

① Sensing range on gray, 18 % remission
② Sensing range on white, 90 % remission

Operating reserve

MHL15V

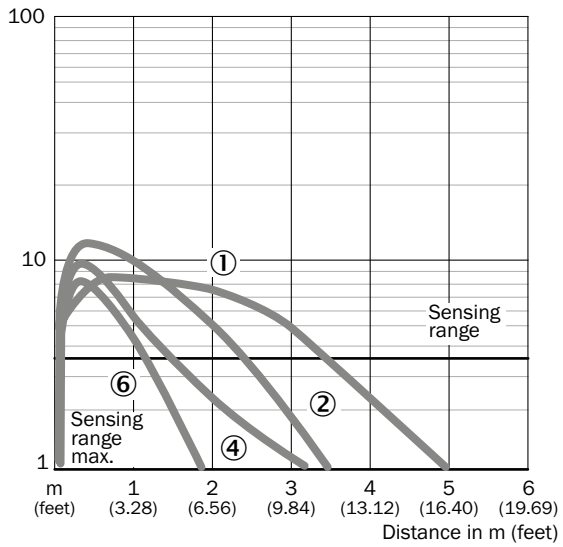

① PL80A
② P250
④ PL50A, PL40A
⑥ PL20A

MHSE15V

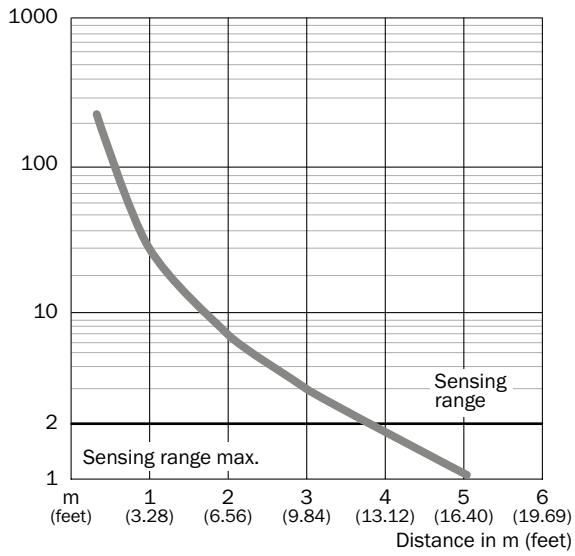

Bar diagrams

MHTB15V

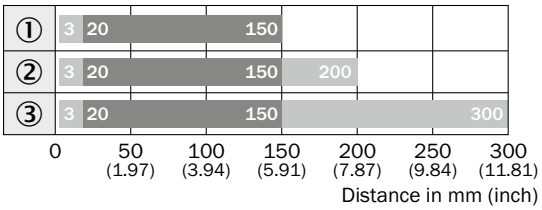

Sensing range Sensing range max.

① Sensing range on black, 6 % remission
② Sensing range on gray, 18 % remission
③ Sensing range on white, 90 % remission

MHT15V, 100 mm

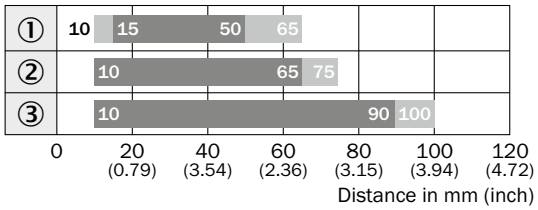

Sensing range Sensing range max.

① Sensing range on black, 6 % remission
② Sensing range on gray, 18 % remission
③ Sensing range on white, 90 % remission

MHT15V, 350 mm

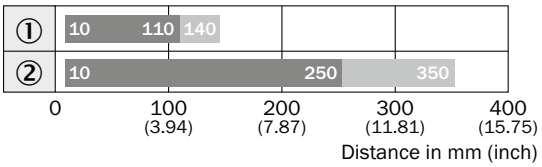

Sensing range Sensing range max.

① Sensing range on gray, 18 % remission
② Sensing range on white, 90 % remission

MHL15V

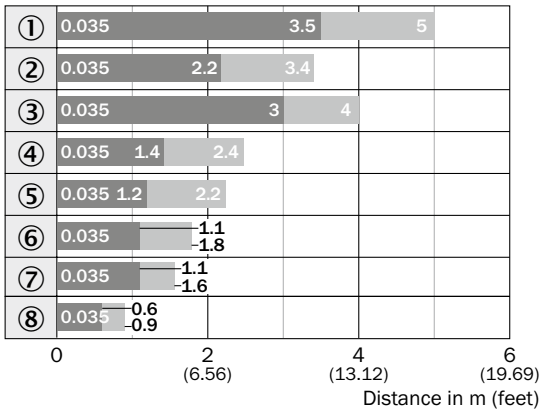

Sensing range Sensing range max.

① PL80A
② P250
③ C110A
④ PL50A, PL40A
⑤ PL30A, PL31A
⑥ PL20A
⑦ P250 CHEM
⑧ PL20 CHEM

MHSE15V

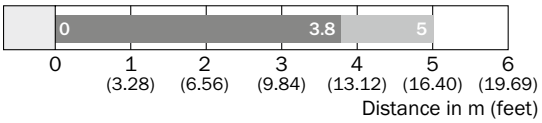

Sensing range Sensing range max.

Connection diagram

Cd-057

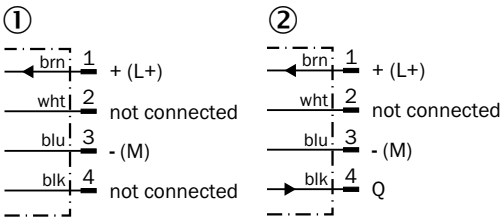

① Sender
② Receiver

Cd-066

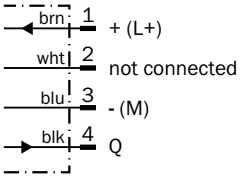

Recommended accessories

Mounting brackets/plates

Mounting plates

Figure	Material	Description	Model name	Part no.
	Stainless steel	Mounting plate for M18 housing	BEF-WG-M18N	5320948
		Mounting bracket	BEF-WN-M18N	5320947

Universal bar clamp systems

Figure	Material	Description	Model name	Part no.
	Stainless steel 1.4571 (sheet), Stainless steel 1.4408 (clamp)	Plate N06N for universal clamp bracket, M18	BEF-KHS-N06N	2051622

Reflectors

Angular

Figure	Material	Description	Model name	Part no.
	Plastic	Chemically resistant, screw connection, 47 mm x 47 mm	P250 CHEM	5321097
	PMMA/ABS	Rectangular, screw connection, 80 mm x 80 mm	PL80A	1003865

Fine triple reflectors

Figure	Material	Description	Model name	Part no.
	Plastic	Fine triple, chemically resistant, screw connection, 18 mm x 18 mm	PL10F CHEM	5321636
		Fine triple, chemically resistant, screw connection, suitable for laser sensors, 16 mm x 38 mm	PL20F-CHEM	5326089

Reflective tape

Figure	Description	Model name	Part no.
	Self-adhesive, 50 mm x 60 mm	REF-IRF-56	5314244

Special reflectors

Figure	Material	Description	Model name	Part no.
	Plastic	Chemically resistant, screw connection, 38 mm x 15 mm	PL20 CHEM	5321089
	PMMA/ABS	Antifog, for prevention of moisture fogging on the reflection area, screw connection, 56 mm x 37 mm	PL40A Antifog	5322011
	Plastic	Rectangular, screw connection M3, countersunk screw head, chemical resistent, 56 mm x 37 mm	PL40B-CHEM	5326088
	Stainless steel V4A (1.4404, 316L)	Stainless steel reflector, hygienic design, chemically resistant, Enclosure rating IP 69K, D12-adapter shaft, 25 mm x 25 mm	PLH25-D12	2063404
		Stainless steel reflector, hygienic design, chemically resistant, Enclosure rating IP 69K, M12-adapter thread, 25 mm x 25 mm	PLH25-M12	2063403
		Stainless steel reflector, wash-down design, chemically resistant, Enclosure rating IP 69K, screw connection, 14 mm x 14 mm	PLV14-A	2063405

Terminal and alignment brackets

Alignment brackets

Figure	Material	Description	Model name	Part no.
	Plastic	Mounting bracket with ball-and-socket	BEF-WN-M18-ST02	5312973

Terminal brackets

Figure	Material	Description	Model name	Part no.
	Plastic (PA12), glass-fiber reinforced	Clamping block for round sensors M18, without fixed stop	BEF-KH-M18	2051481
		Clamping block for round sensors M18, with fixed stop	BEF-KHF-M18	2051482
	Stainless steel	Mounting ring	BEF-WN-MH15-2V	4053358

→ **For additional accessories, please see page L-861**

Low-cost cylindrical M18 Laser photoelectric sensor

Product description

The V18 Laser family of photoelectric sensors offers modern laser technology with a small, highly visible light spot that detects small parts and offers precise sensing. These laser class 1 sensors provide long sensing distances and short response times.

Yellow and green indicator LEDs ensure easy mounting, commissioning, adjustment and maintenance. Sensitivity can be set in several ways - either manually via a teach-in pushbutton or electronically using control input C.

At a glance

- Laser emitter LED enclosed in a cylindrical M18 housing
- Laser class 1
- Fast response time
- Straight or right-angle housing
- Durable metal housing
- IP 67
- Small visible light spot to detect small objects

Your benefits

- Lowest-cost laser sensor in M18 cylindrical housing saves installation costs
- Time-saving installation and alignment with highly visible light spot
- Laser class 1 does not require increased safety measures or markings, reducing installation costs
- Fast response time ensures reliable object detection at high speeds and increases machine throughput

Additional information

→ **www.mysick.com/en/V18_Laser**

For more information, just enter the link or scan the QR code and get direct access to technical data, CAD design models, operating instructions, software, application examples and much more.

Detailed technical data

Features

	VTE18L	VL18L	VSE18L
Sensor principle	Photoelectric proximity sensor	Photoelectric retro-reflective sensor	Through-beam photoelectric sensor
Detection principle	Energetic	Standard optics	–
Housing design (light emission)	Cylindrical, straight; cylindrical, angled (depending on type)		
Housing length	97.7 mm/107.7 mm (depending on type)		
Thread diameter (housing)	M18 x 1		
Sensing range max.			
Axial	0 mm ... 400 mm [1]	0.1 m ... 35 m [2]	0 m ... 60 m
Radial	2 mm ... 250 mm [1]	0.1 m ... 35 m [2]	0 m ... 60 m
Sensing range			
Axial	5 mm ... 300 mm	0.1 m ... 30 m [2]	0 m ... 50 m
Radial	5 mm ... 200 mm	0.1 m ... 30 m [2]	0 m ... 50 m
Focus [3]		–	
Type of light	Visible red light		
Light source [4]	Laser		
Angle of dispersion	–	0.04°	0.06°
Wave length	650 nm		
Laser class	1 (IEC 60825-1)		
Adjustment	Cable, Single teach-in button		Potentiometer, 270 °

[1] Object with 90 % reflectance (referred to standard white, DIN 5033)
[2] P250F.
[3] Focused, focus at 100 mm.
[4] Average service life of 100,000 h at T_A = +25 °C.

Mechanics/electronics

	VTE18L	VL18L	VSE18L
Supply voltage [1]	10 V DC ... 30 V DC		
Ripple [2]	≤ 10 %		
Power consumption [3]	≤ 30 mA	≤ 20 mA	≤ 25 mA
Output type	PNP/NPN (depending on type)		
Switching mode	Light/dark-switching		
Switching mode selector	Selectable via control input C		Selectable via L/D control wire
Output current $I_{max.}$	≤ 100 mA		
Response time [4]	≤ 0.625 ms		≤ 0.5 ms
Switching frequency [5]	800 Hz		1,000 Hz
Angle of reception	–		0.08°
Connection type	Male connector, M12		
Circuit protection	A [6], B [7], C [8], D [9]		
Protection class	III		
Weight	60 g		120 g
Polarisation filter	–	✔	–
Housing material	Nickel-plated brass/PC		
Optics material	PC with protective glass pane		

	VTE18L	VL18L	VSE18L
Enclosure rating	IP 67		
Test input sender off	–		"Test" to 0V
Ambient operating temperature	–15 °C ... +55 °C		
Ambient storage temperature	–25 °C ... +70 °C		

[1] Limit values.
[2] May not exceed or fall short of V_S tolerances.
[3] Without load.
[4] Signal transit time with resistive load.
[5] With light/dark ratio 1:1.
[6] A = V_S connections reverse-polarity protected.
[7] B = inputs and output reverse-polarity protected.
[8] C = interference suppression.
[9] D = outputs overcurrent and short-circuit protected.

Ordering information

Other models available at www.mysick.com/en/V18_Laser

VTE18L

- **Sensor principle:** photoelectric proximity sensor
- **Detection principle:** energetic
- **Adjustment:** cable, single teach-in button

Housing design	Sensing range max. [1]	Light spot size (distance)	Output type	Switching mode	Connection	Connection diagram	Model name	Part no.
Axial	0 mm ... 400 mm	Ø 8 mm (300 mm)	PNP	Light/dark-switching	Connector M12, 4-pin	Cd-099	VTE18L-4P324	6027418
			NPN	Light/dark-switching	Connector M12, 4-pin	Cd-099	VTE18L-4N324	6027420
Radial	2 mm ... 250 mm	Ø 5 mm (200 mm)	PNP	Light/dark-switching	Connector M12, 4-pin	Cd-099	VTE18L-4P344	6027422
			NPN	Light/dark-switching	Connector M12, 4-pin	Cd-099	VTE18L-4N344	6027424

[1] Object with 90 % reflectance (referred to standard white, DIN 5033)

VL18L

- **Sensor principle:** photoelectric retro-reflective sensor
- **Detection principle:** standard optics
- **Adjustment:** cable, single teach-in button

Housing design	Sensing range max. [1]	Light spot size (distance)	Output type	Switching mode	Connection	Connection diagram	Model name	Part no.
Axial	0.1 m ... 35 m	Ø 9 mm (35 mm)	PNP	Light/dark-switching	Connector M12, 4-pin	Cd-099	VL18L-4P324	6027430
				Light switching	Connector M12, 4-pin	Cd-066	VL18L-3F324	6034330
			NPN	Light/dark-switching	Connector M12, 4-pin	Cd-099	VL18L-4N324	6027432
Radial	0.1 m ... 35 m	Ø 9 mm (35 mm)	PNP	Light/dark-switching	Connector M12, 4-pin	Cd-099	VL18L-4P344	6027434
			NPN	Light/dark-switching	Connector M12, 4-pin	Cd-099	VL18L-4N344	6027436

[1] P250F.

VSE18L

- **Sensor principle:** through-beam photoelectric sensor
- **Adjustment:** potentiometer, 270 °

Housing design	Sensing range max.	Light spot size (distance)	Output type	Switching mode	Connection	Connection diagram	Model name	Part no.
Axial	0 m ... 60 m	Ø 40 mm (50 mm)	PNP	Light/dark-switching	Connector M12, 4-pin	Cd-219	VSE18L-4P324	6027931
			NPN	Light/dark-switching	Connector M12, 4-pin	Cd-219	VSE18L-4N324	6027933
Radial	0 m ... 60 m	Ø 40 mm (50 mm)	PNP	Light/dark-switching	Connector M12, 4-pin	Cd-219	VSE18L-4P344	6027935
			NPN	Light/dark-switching	Connector M12, 4-pin	Cd-219	VSE18L-4N344	6027937

Dimensional drawings

Dimensions in mm (inch)

Axial

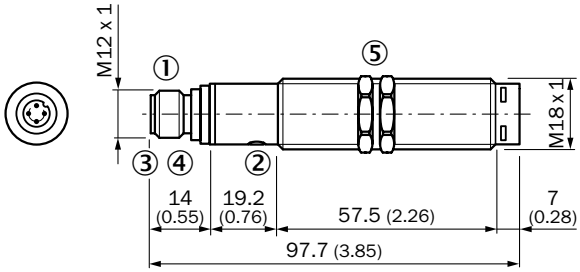

① Connector M12, 4-pin
② Sensitivity setting; single teach-in button
③ Green LED indicator: V_S supply voltage feed
④ Yellow LED indicator:- lights continuously: Reception signal> reserve factor 2- blinks: Reception signal< reserve factor 2 but > switching threshold 1
⑤ Fastening nuts (2 x); width across 24, metal(included with delivery)

Radial

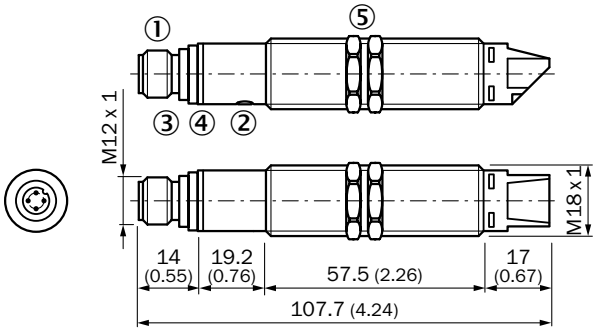

① Connector M12, 4-pin
② Sensitivity setting; single teach-in button
③ Green LED indicator: V_S supply voltage feed
④ Yellow LED indicator:- lights continuously: Reception signal> reserve factor 2- blinks: Reception signal< reserve factor 2 but > switching threshold 1
⑤ Fastening nuts (2 x); width across 24, metal(included with delivery)

Characteristic curves

Black-white shift

VTE18L, axial

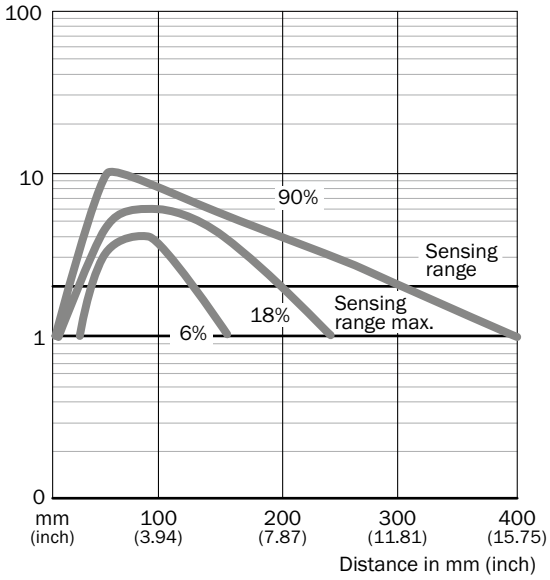

VTE18L, radial

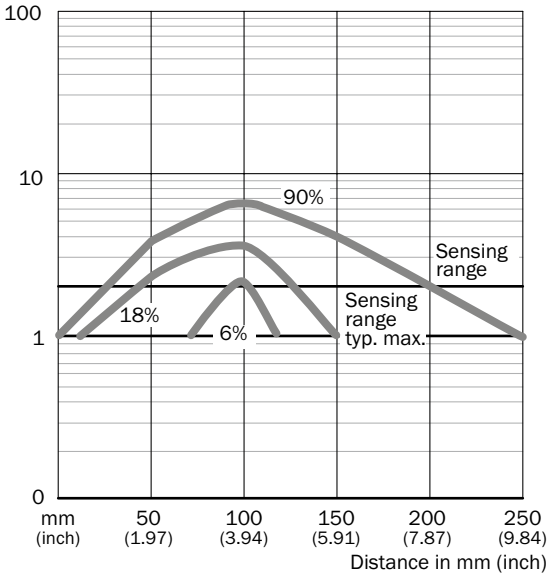

Operating reserve

VL18L

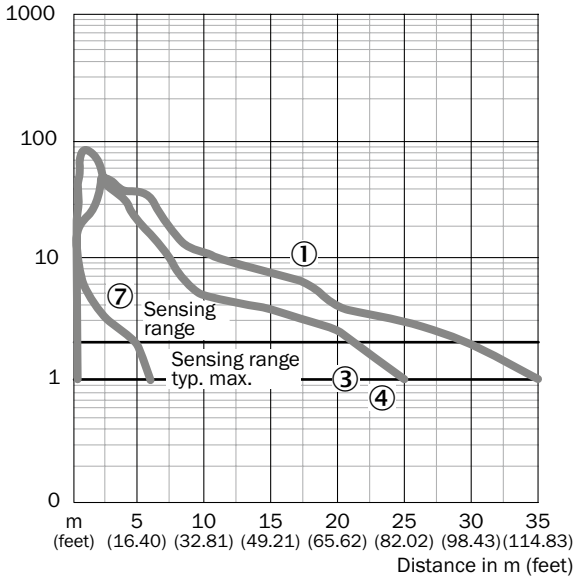

VSE18L

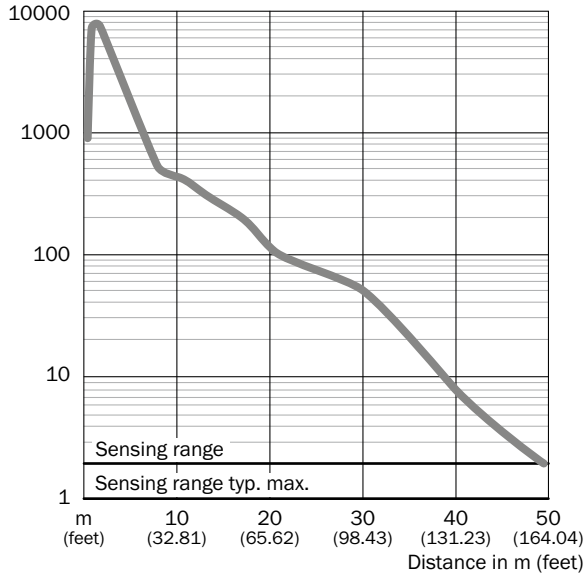

① P250F
③ PL80A
④ P250
⑦ Reflective tape Diamond Grade

Bar diagrams

VTE18L

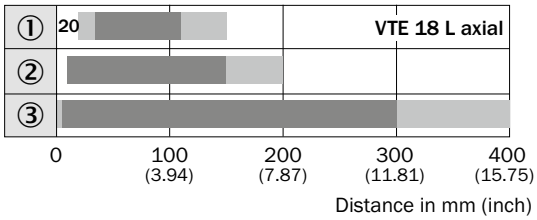

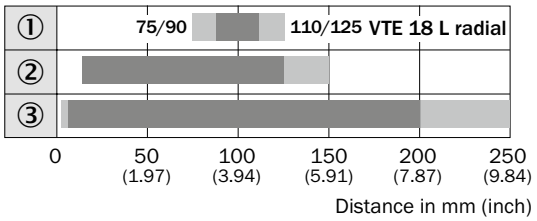

Sensing range Sensing range max.

① Sensing range on black, 6 % remission
② Sensing range on gray, 18 % remission
③ Sensing range on white, 90 % remission

VL18L

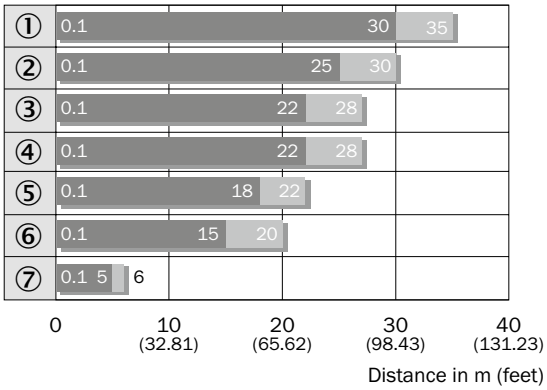

Sensing range Sensing range max.

① P250F
② PL10F
③ PL80A
④ P250
⑤ C110A
⑥ PL20F
⑦ Reflective tape Diamond Grade

VSE18L

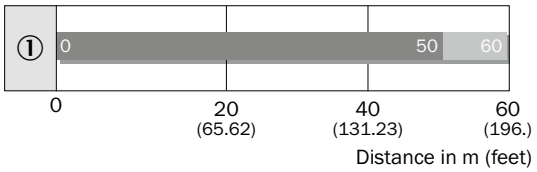

Sensing range Sensing range max.

Light spot diameter

VL18L

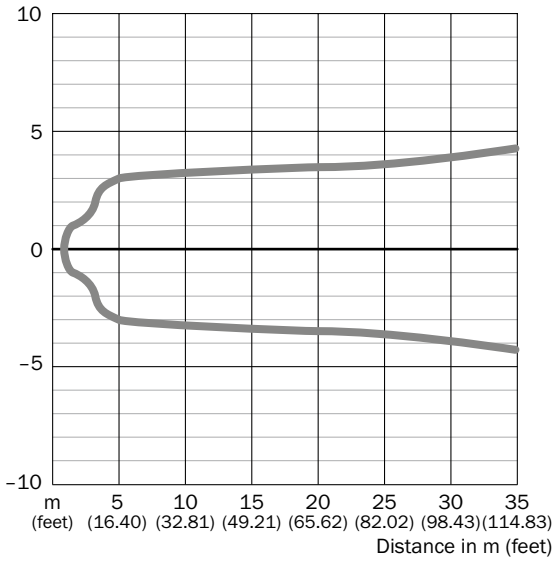

VSE18L

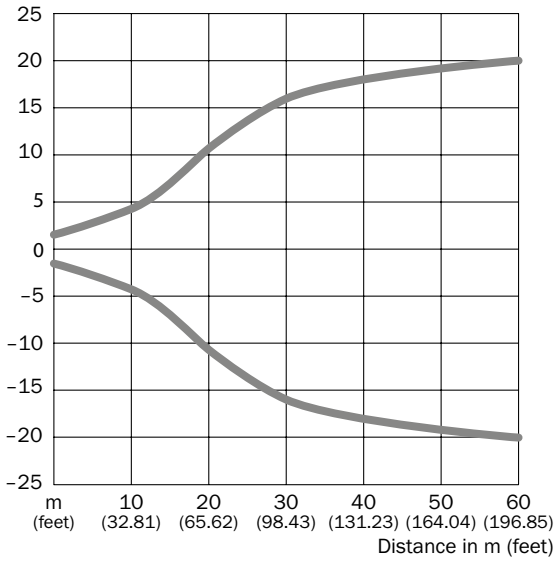

Connection diagram

Cd-066

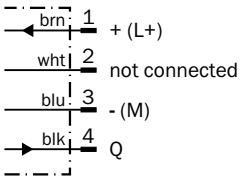

Cd-099

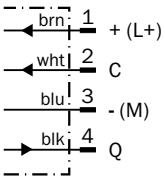

Cd-219

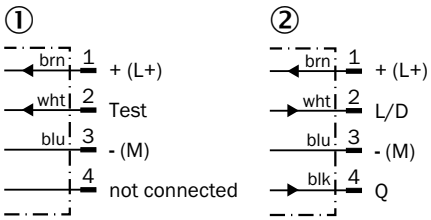

① Sender
② Receiver

Recommended accessories

Mounting brackets/plates

Mounting brackets

Figure	Material	Description	Model name	Part no.
	Steel, zinc coated	Mounting plate for M18 sensors	BEF-WG-M18	5321870
		Mounting bracket, M18 thread	BEF-WN-M18	5308446

Plug connectors and cables

Connecting cable (female connector-open)

- **Cable material:** PVC
- **Connector material:** TPU

Figure	Connection type head A	Connection type head B	Connecting cable	Enclosure rating	Model name	Part no.
	Female connector, M12, 4-pin, straight	Cable, open conductor heads	2 m, 4-wire	IP 67	DOL-1204-G02M	6009382
			5 m, 4-wire	IP 67	DOL-1204-G05M	6009866
	Female connector, M12, 4-pin, angled	Cable, open conductor heads	2 m, 4-wire	IP 67	DOL-1204-W02M	6009383
			5 m, 4-wire	IP 67	DOL-1204-W05M	6009867

Female connector (ready to assemble)

Figure	Connection type head A	Connection type head B	Connector material	Enclosure rating	Model name	Part no.
	Female connector, M12, 4-pin, straight	Screw-type terminals	PBT	IP 67	DOS-1204-G	6007302
	Female connector, M12, 4-pin, angled	Screw-type terminals	PBT	IP 67	DOS-1204-W	6007303

Universal bar clamp systems

Figure	Material	Description	Model name	Part no.
	Zinc plated steel (sheet), Diecast zinc (clamp)	Plate N06 for universal clamp bracket	BEF-KHS-N06	2051612

Reflectors

Angular

Figure	Material	Description	Model name	Part no.
	PMMA/ABS	Rectangular, screw connection, 47 mm x 47 mm	P250	5304812
		Rectangular, screw connection, 80 mm x 80 mm	PL80A	1003865

Fine triple reflectors

Figure	Material	Description	Model name	Part no.
	PMMA/ABS	Fine triple, screw connection, suitable for laser sensors, 47 mm x 47 mm	P250F	5308843
		Fine triple, screw connection, suitable for laser sensors, 18 mm x 18 mm	PL10F	5311210
		Fine triple, screw connection, suitable for laser sensors, 38 mm x 16 mm	PL20F	5308844
		Fine triple, screw connection, suitable for laser sensors, 56 mm x 28 mm	PL30F	5326523

Round

Figure	Material	Description	Model name	Part no.
	PMMA/ABS	Round, screw connection	C110A	5304549

Terminal and alignment brackets

Alignment brackets

Figure	Material	Description	Model name	Part no.
	Plastic	Mounting bracket with ball-and-socket	BEF-WN-M18-ST02	5312973

Terminal brackets

Figure	Material	Description	Model name	Part no.
	Plastic (PA12), glass-fiber reinforced	Clamping block for round sensors M18, without fixed stop	BEF-KH-M18	2051481
		Clamping block for round sensors M18, with fixed stop	BEF-KHF-M18	2051482

→ **For additional accessories, please see page L-861**

Cylindrical photoelectric sensors with fool-proof touch-teach for washdown areas

STAIN-LESS STEEL

IP 69K

Product description

The V18V has a chemical and pressure cleaning resistant housing for wash down applications and includes patented touch (smart) teach for foolproof operation. These sensors are field-tested and are able to stand up to harsh environments. The sensors offer ease of use in wash down areas due to corrosion resistant and food grade materials, a wide sensing range and an extended temperature range.

The V18V sensors are certified by ECOLAB and JohnsonDiversey. Their IP 69K enclosure rating makes them ideal for applications in the food and beverage, pharmaceutical and packaging industries.

At a glance

- IP 69K-rated cylindrical photoelectric sensors in M18 stainless steel housing
- Resistant to all common cleaning agents and certified by independent institutes
- Extended temperature range: +85° C (long-term), +100°C / 15 min. (short-term)
- Touch (smart) teach-in adjustment
- All sensor materials, including the housing, LED and lens are resistant to chemicals
- IP 69K and IP 68 according to DIN 40050
- Laser-etched part numbers
- Ecolab & JohnsonDiversey certified for chemical resistance

Your benefits

- Simple, time-saving design ensures easy mounting, alignment and replacement
- IP 69K-rated stainless steel housing has a long service life that withstands wash down environments, reducing maintenance time and costs
- Unique touch-teach feature and lock/unlock functionality allow users to control who can change the sensor setting, which reduces the chances of disturbing a proven process and saves commissioning and maintenance time
- Laser-etched part numbers ensures the part numbers will not be washed off, saving maintenance time

Additional information

→ **www.mysick.com/en/V18V**

For more information, just enter the link or scan the QR code and get direct access to technical data, CAD design models, operating instructions, software, application examples and much more.

Detailed technical data

Features

	VTB18V	VTF18V	VTE18V	VL18V	VS/VE18V
Sensor principle	Photoelectric proximity sensor			Photoelectric retro-reflective sensor	Through-beam photoelectric sensor
Detection principle	Background suppression	Energetic		Standard optics	–
Housing design (light emission)	Cylindrical, straight				
Housing length	83 mm				
Thread diameter (housing)	M18 x 1				
Sensing range max.	0 mm ... 140 mm [1]	0 mm ... 110 mm [1]	0 mm ... 900 mm [1] (depending on type)	0.035 m ... 5 m [2] (depending on type)	0 m ... 20 m
Sensing range	0 mm ... 130 mm	5 mm ... 100 mm	5 mm ... 800 mm (depending on type)	0.035 m ... 4.5 m [2] (depending on type)	0 m ... 18 m
Type of light	Visible red light		Infrared light	Visible red light	Infrared light
Light source [3]	LED				
Wave length	660 nm		880 nm	660 nm	880 nm
Adjustment	Single teach-in button			–	

[1] Object with 90 % reflectance (referred to standard white, DIN 5033)
[2] PL80A.
[3] Average service life of 100,000 h at T_A = +25 °C.

Mechanics/electronics

	VTB18V	VTF18V	VTE18V	VL18V	VS/VE18V
Supply voltage [1]	10 V DC ... 30 V DC				
Ripple [2]	≤ 10 %				
Power consumption [3]	≤ 50 mA	≤ 35 mA			–
Power consumption, sender	–				35 mA [3]
Power consumption, receiver	–				40 mA [3]
Output type	PNP, open collector/NPN, open collector (depending on type)				
Switching mode	Light/dark-switching (selectable via L/D control wire)				
Signal voltage PNP HIGH/LOW	Approx. VS – 2.0 V / 0 V				
Signal voltage NPN HIGH/LOW	Approx. VS / < 2.0 V				
Output current $I_{max.}$	≤ 100 mA				
Response time [4]	≤ 0.5 ms	≤ 1 ms			≤ 2 ms
Switching frequency [5]	1,000 Hz	500 Hz	± 500 Hz	500 Hz	250 Hz
Angle of reception	–				8°
Attenuation along light beam	–			≥ 20 %	
Attenuation difference along light beam	–			≥ 15 %	–
Attenuation difference of object	–			≥ 7.5 %	
Connection type [6]	Male connector, M12				
Circuit protection	A [7], B [8], C [9], D [10]				
Protection class	III				
Weight	120 g				240 g
Polarisation filter	–			–/ ✔ (depending on type)	–
Housing material	Stainless steel V4A (1.4404, 316L)				

	VTB18V	VTF18V	VTE18V	VL18V	VS/VE18V
Optics material	Plan, PPS (Grilamid)			Plan, PPS (Grilamid), Plan, PMMA, surface hardened and tempered (depending on type)	Plan, PPS (Grilamid)
Enclosure rating [11]	IP 67, IP 68, IP 69K				
Test input sender off	–				"Test" to 0V
Ambient operating temperature	–25 °C ... +80 °C [12]				
Ambient storage temperature	–40 °C ... +80 °C				

[1] Limit values.
[2] May not exceed or fall short of V_S tolerances.
[3] Without load, at VS 30 V DC.
[4] Signal transit time with resistive load.
[5] With light/dark ratio 1:1.
[6] With gold plated contact pins, PPS with FDA certificate.
[7] A = V_S connections reverse-polarity protected.
[8] B = interference suppression.
[9] D = outputs overcurrent and short-circuit protected.
[10] D = inputs and output reverse-polarity protected.
[11] With correct mounted IP 69K connector.
[12] +100 °C at max 15 minutes.

Ordering information

Other models available at www.mysick.com/en/V18V

VTB18V

- **Sensor principle:** photoelectric proximity sensor
- **Detection principle:** background suppression
- **Switching mode:** light/dark-switching
- **Connection:** connector M12, 4-pin PPS (Griamid)

Sensing range max. [1]	Light spot size (distance)	Adjustment	Output type	Connection diagram	Model name	Part no.
0 mm ... 140 mm	Ø 15 mm (130 mm)	Single teach-in button	PNP	Cd-087	VTB18-4P1240V	6035493
			NPN	Cd-087	VTB18-4N1240V	6035494

[1] Object with 90 % reflectance (referred to standard white, DIN 5033)

VTF18V

- **Sensor principle:** photoelectric proximity sensor
- **Detection principle:** energetic
- **Switching mode:** light/dark-switching
- **Connection:** connector M12, 4-pin PPS (Griamid)

Sensing range max. [1]	Light spot size (distance)	Adjustment	Output type	Connection diagram	Model name	Part no.
0 mm ... 110 mm	Ø 15 mm (100 mm)	Single teach-in button	PNP	Cd-087	VTF18-4P1240V	6035487
			NPN	Cd-087	VTF18-4N1240V	6035488

[1] Object with 90 % reflectance (referred to standard white, DIN 5033)

VTE18V

- **Sensor principle:** photoelectric proximity sensor
- **Detection principle:** energetic
- **Switching mode:** light/dark-switching
- **Connection:** connector M12, 4-pin PPS (Griamid)

Sensing range max. [1]	Light spot size (distance)	Adjustment	Output type	Connection diagram	Model name	Part no.
0 mm ... 450 mm	Ø 60 mm (400 mm)	Single teach-in button	PNP	Cd-087	VTE18-4P4240V	6035489
			NPN	Cd-087	VTE18-4N4240V	6035490
0 mm ... 900 mm	Ø 100 mm (800 mm)	Single teach-in button	PNP	Cd-087	VTE18-4P8240V	6035491
			NPN	Cd-087	VTE18-4N8240V	6035492

[1] Object with 90 % reflectance (referred to standard white, DIN 5033)

VL18V, clear material detection

- **Sensor principle:** photoelectric retro-reflective sensor
- **Detection principle:** standard optics
- **Switching mode:** light/dark-switching
- **Connection:** connector M12, 4-pin PPS (Griamid)

Sensing range max. [1]	Light spot size (distance)	Output type	Connection diagram	Model name	Part no.
0.035 m ... 4.5 m	Ø 60 mm (1 m)	PNP	Cd-087	VL18-4P2240V	6035497
		NPN	Cd-087	VL18-4N2240V	6035498

[1] PL80A.

VL18V

- **Sensor principle:** photoelectric retro-reflective sensor
- **Detection principle:** standard optics
- **Switching mode:** light/dark-switching
- **Connection:** connector M12, 4-pin PPS (Griamid)

Sensing range max. [1]	Light spot size (distance)	Output type	Connection diagram	Model name	Part no.
0.1 m ... 5 m	Ø 200 mm (4.5 m)	PNP	Cd-087	VL18-4P3140V	6035495
		NPN	Cd-087	VL18-4N3140V	6035496

[1] PL80A.

VS/VE18V

- **Sensor principle:** through-beam photoelectric sensor
- **Switching mode:** light/dark-switching
- **Connection:** connector M12, 4-pin PPS (Griamid)

Sensing range max.	Light spot size (distance)	Output type	Connection diagram	Model name	Part no.
0 m ... 20 m	Ø 600 mm (15 m)	PNP	Cd-219	VS/VE18-4P3140V	6035499
		NPN	Cd-219	VS/VE18-4N3140V	6035500

Dimensional drawings

Dimensions in mm (inch)

VTB18V

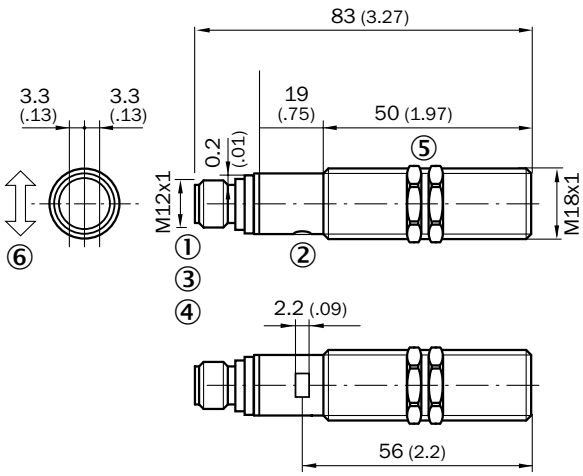

① Connector M12, 4-pin
② Sensing range adjustment: Touch-Teach-In
③ Status indicator LED, green: signalizing Touch-Teach-in
④ Status indicator LED, yellow: Status of received light beam
⑤ Fastening nuts (2 x); width across 24, stainless steel
⑥ Standard direction of the material being detected

VL18V, VSE18V

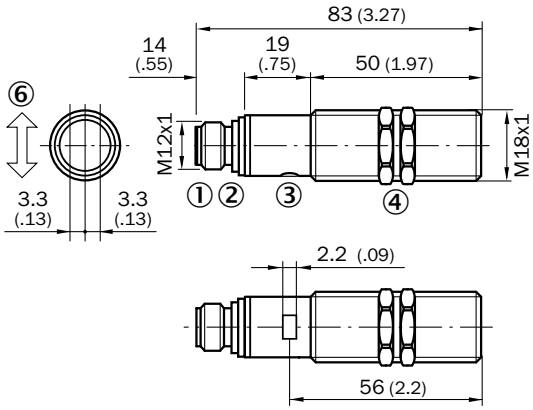

① Connector M12, 4-pin
② Yellow LED indicator:
- lights continuously: Reception signal> reserve factor 2
- blinks: Reception signal< reserve factor 2 but > switching threshold 1

③ Fastening nuts (2 x); width across 24, stainless steel

VTF18V, VTE18V

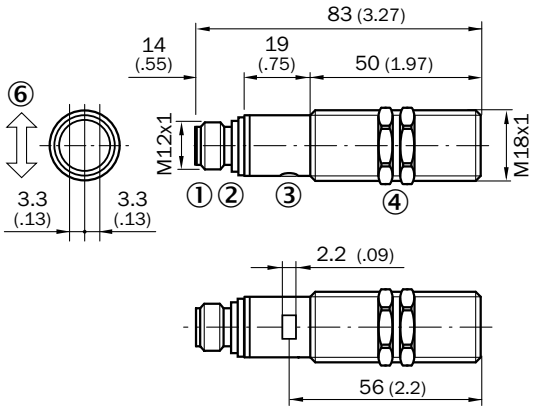

① Connector M12, 4-pin
② Sensing range adjustment: Touch-Teach-In
③ Status indicator LED, green: signalizing Touch-Teach-in
④ Yellow LED indicator:
- lights continuously: Reception signal> reserve factor 2
- blinks: Reception signal< reserve factor 2 but > switching threshold 1

⑤ Fastening nuts (2 x); width across 24, stainless steel

Characteristic curves

Black-white shift

VTB18V

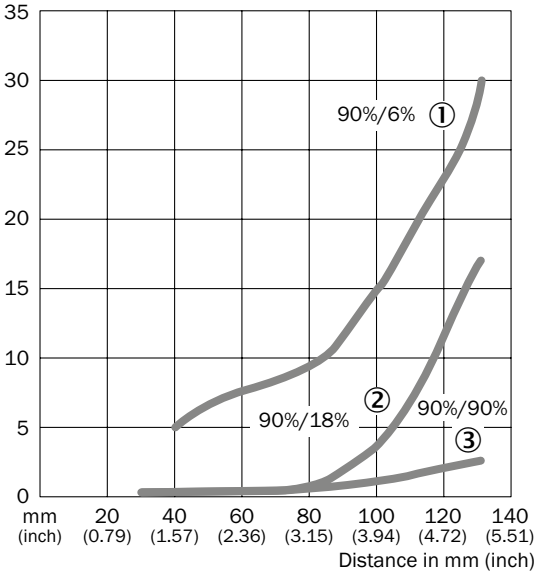

① Sensing range on black, 6 % remission
② Sensing range on gray, 18 % remission
③ Sensing range on white, 90 % remission

VTF18V

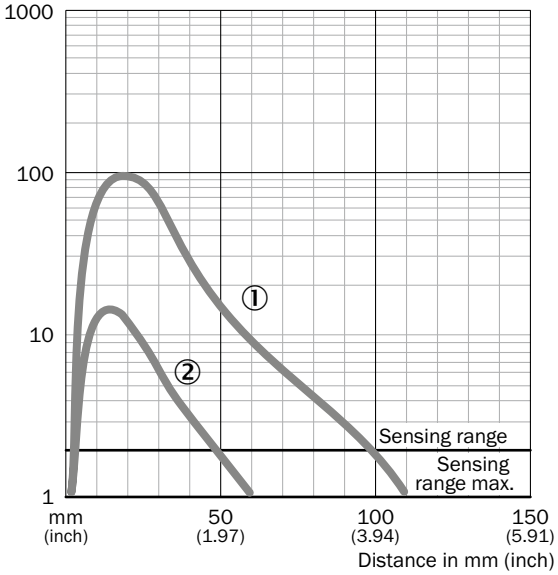

① Sensing range on white, 90 % remission
② Sensing range on gray, 18 % remission

VTE18V, 450 mm

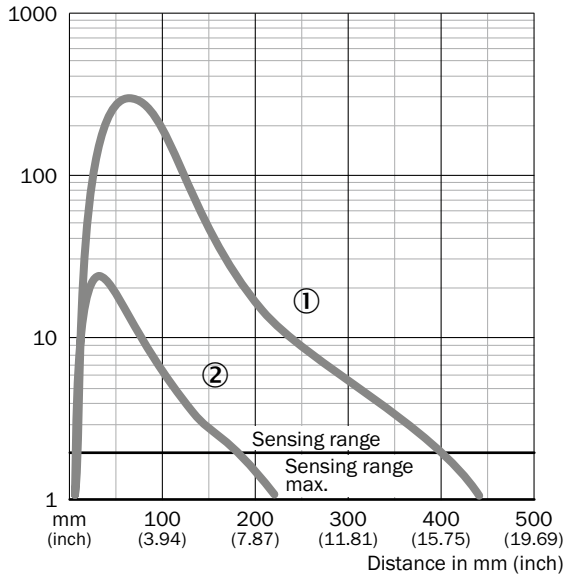

① Sensing range on white, 90 % remission
② Sensing range on gray, 18 % remission

VTE18V, 900 mm

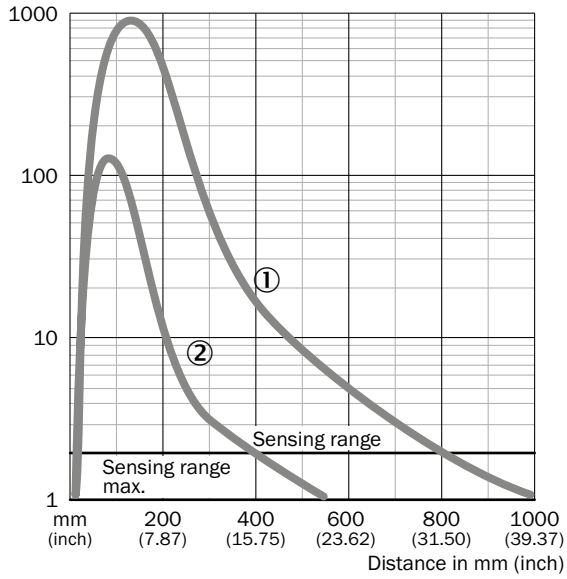

① Sensing range on white, 90 % remission
② Sensing range on gray, 18 % remission

Operating reserve

VL18V, clear material detection

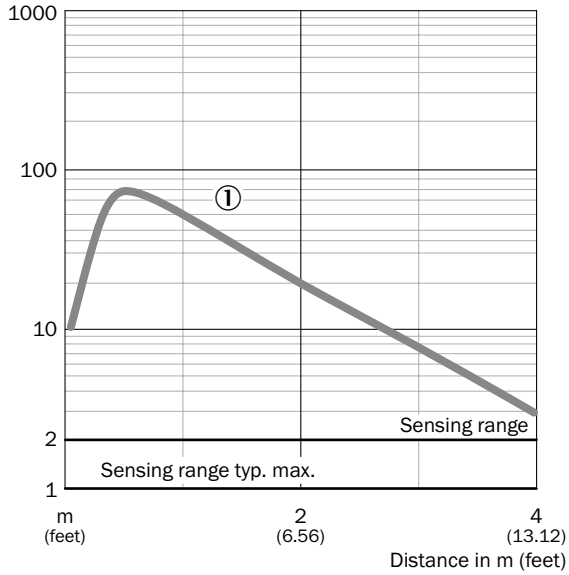

① PL80A

VL18V

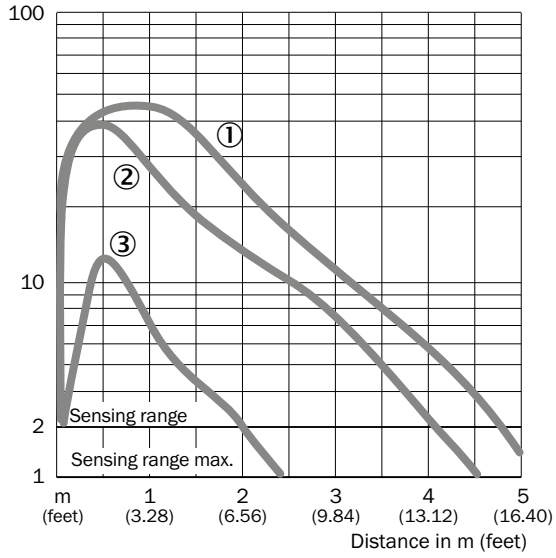

① PL80A
② C110A
⑤ P250 CHEM

VS/VE18V

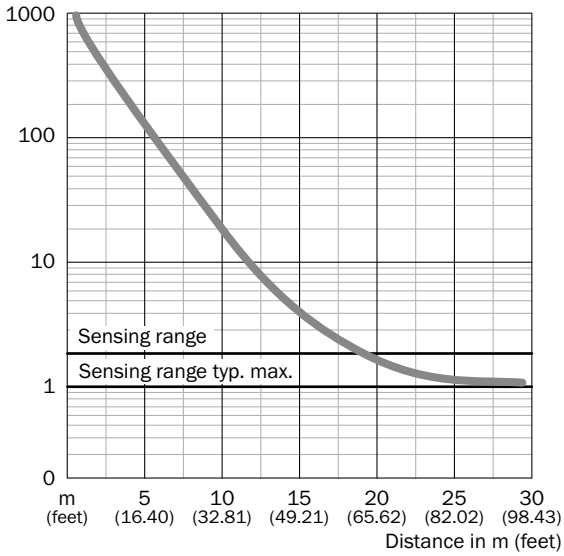

Bar diagrams

VTF18V

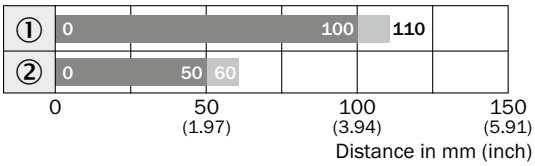

Sensing range Sensing range max.

① Sensing range on white, 90 % remission
② Sensing range on gray, 18 % remission

VTE18V, 450 mm

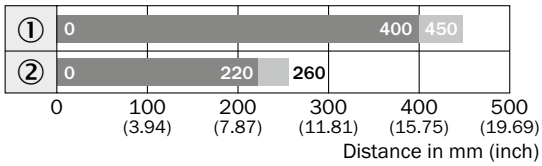

Sensing range Sensing range max.

① Sensing range on white, 90 % remission
② Sensing range on gray, 18 % remission

VTE18V, 900 mm

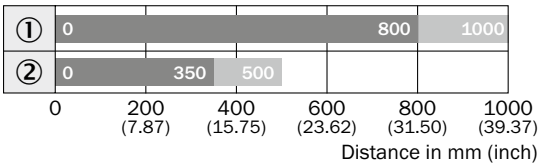

Sensing range Sensing range max.

① Sensing range on white, 90 % remission
② Sensing range on gray, 18 % remission

VL18V

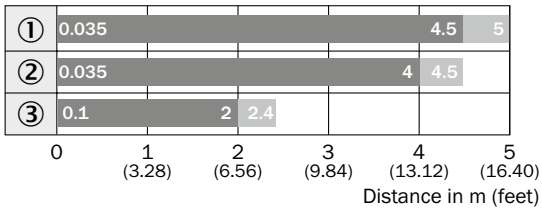

Sensing range Sensing range max.

① PL80A
② C110A
③ Reflective tape Diamond Grade

VS/VE18V

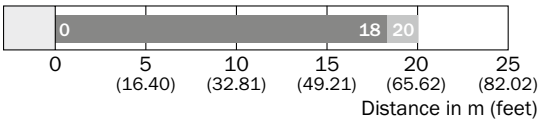

Sensing range Sensing range max.

Connection diagram

Cd-087

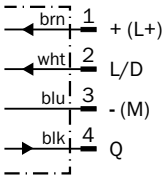

Cd-219

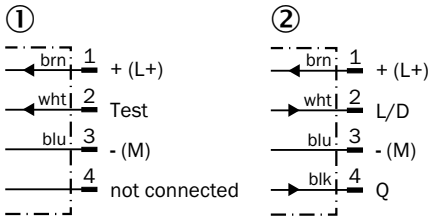

① Sender
② Receiver

Recommended accessories

Mounting brackets/plates

Mounting plates

Figure	Material	Description	Model name	Part no.
	Stainless steel	Mounting plate for M18 housing	BEF-WG-M18N	5320948
		Mounting bracket	BEF-WN-M18N	5320947

Plug connectors and cables

Connecting cable (female connector-open)

- **Cable material:** PVC
- **Connector material:** PVC

Figure	Connection type head A	Connection type head B	Connecting cable	Enclosure rating	Model name	Part no.
	Female connector, M12, 4-pin, straight	Cable, open conductor heads	2 m, 4-wire	IP 67, IP 69K	DOL-1204-G02MN	6028128
			5 m, 4-wire	IP 67, IP 69K	DOL-1204-G05MN	6028130
	Female connector, M12, 4-pin, angled	Cable, open conductor heads	2 m, 4-wire	IP 67, IP 69K	DOL-1204-W02MN	6028129
			5 m, 4-wire	IP 67, IP 69K	DOL-1204-W05MN	6028131

Universal bar clamp systems

Figure	Material	Description	Model name	Part no.
	Stainless steel 1.4571 (sheet), Stainless steel 1.4408 (clamp)	Plate N06N for universal clamp bracket, M18	BEF-KHS-N06N	2051622

Reflectors

Angular

Figure	Material	Description	Model name	Part no.
	Plastic	Chemically resistant, screw connection, 47 mm x 47 mm	P250 CHEM	5321097
	PMMA/ABS	Rectangular, screw connection, 80 mm x 80 mm	PL80A	1003865

Fine triple reflectors

Figure	Material	Description	Model name	Part no.
	Plastic	Fine triple, chemically resistant, screw connection, 18 mm x 18 mm	PL10F CHEM	5321636
		Fine triple, chemically resistant, screw connection, suitable for laser sensors, 16 mm x 38 mm	PL20F-CHEM	5326089

Reflective tape

Figure	Description	Model name	Part no.
	Self-adhesive, 50 mm x 60 mm	REF-IRF-56	5314244

Special reflectors

Figure	Material	Description	Model name	Part no.
	PMMA/ABS	Antifog, for prevention of moisture fogging on the reflection area, screw connection, 56 mm x 37 mm	PL40A Antifog	5322011
	Plastic	Rectangular, screw connection M3, countersunk screw head, chemical resistent, 56 mm x 37 mm	PL40B-CHEM	5326088
	Stainless steel V4A (1.4404, 316L)	Stainless steel reflector, hygienic design, chemically resistant, Enclosure rating IP 69K, D12-adapter shaft, 25 mm x 25 mm	PLH25-D12	2063404
		Stainless steel reflector, hygienic design, chemically resistant, Enclosure rating IP 69K, M12-adapter thread, 25 mm x 25 mm	PLH25-M12	2063403
		Stainless steel reflector, wash-down design, chemically resistant, Enclosure rating IP 69K, screw connection, 14 mm x 14 mm	PLV14-A	2063405

Terminal and alignment brackets

Alignment brackets

Figure	Material	Description	Model name	Part no.
	Plastic	Mounting bracket with ball-and-socket	BEF-WN-M18-ST02	5312973

Terminal brackets

Figure	Material	Description	Model name	Part no.
	Plastic (PA12), glass-fiber reinforced	Clamping block for round sensors M18, without fixed stop	BEF-KH-M18	2051481
		Clamping block for round sensors M18, with fixed stop	BEF-KHF-M18	2051482
	Stainless steel	Mounting ring	BEF-WN-MH15-2V	4053358

→ **For additional accessories, please see page L-861**

Lowest-cost cylindrical photoelectric sensor on the market!

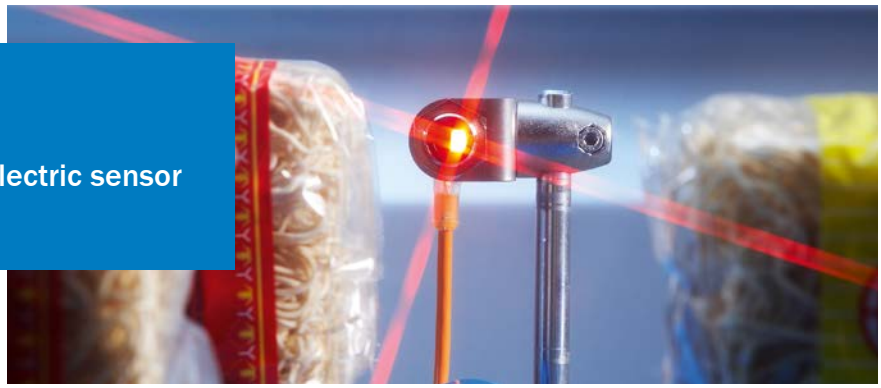

Product description

The V180-2 sensors are designed to provide the longest sensing range for proximity sensors. These low-cost cylindrical sensors are easy to use, easy to install and maintain saving installation time and maintenance costs. The V180-2 is available in either a plastic or metal housing. The bright red LED makes these sensors easy to align and set up, offering time-saving installation. Plus, the indication LEDs provide continuous signal strength information for quick and simple troubleshooting.

The V180-2 provides an economical solution for universal applications, such as product detection and machine positioning in packaging, general manufacturing automation, material handling and warehousing systems.

At a glance

- Low-cost M18 housing sensor on the market
- Long sensing distances: 100 mm, 400 mm, 800 mm (proximity sensor), 300 mm (proximity sensor with BGS), 6 m (retro-reflective sensor) and 20 m (through-beam sensor)
- Bright power and signal LEDs with 360° visibility
- Wide product portfolio solves a broad range of applications
- High switching frequencies up to 1000 Hz
- Available in a metal housing for applications in harsh environments
- Optical axis selectively axial or radial (90°)

Your benefits

- Low-cost M18 cylindrical sensor on the market reduces installation costs
- Bright red sender LED simplifies alignment and saves installation time
- Bright power and signal LEDs with 360° visibility offer quick and simple troubleshooting, reducing maintenance time and costs
- The flat and smooth lens reduces the collection of dust and dirt, ensuring safe operation with less maintenance and fewer costs

Additional information

→ **www.mysick.com/en/V180-2**

For more information, just enter the link or scan the QR code and get direct access to technical data, CAD design models, operating instructions, software, application examples and much more.

Detailed technical data

Features

	VTB180-2	VTF180-2	VTE180-2	VL180-2	VSE180-2
Sensor principle	Photoelectric proximity sensor			Photoelectric retro-reflective sensor	Through-beam photoelectric sensor
Detection principle	Background suppression	Background blanking	Background blanking/energetic (depending on type)	Standard optics	–
Housing design (light emission)	Axial	Axial/radial (depending on type)			
Thread diameter (housing)	M18 x 1				
Sensing range max.					
Axial	10 mm ... 350 mm [1]	1 mm ... 140 mm [1]	1 mm ... 1,100 mm [1] (depending on type)	0.05 m ... 7 m [2]	0 m ... 28 m
Radial	–	1 mm ... 130 mm [1]	1 mm ... 900 mm [1] (depending on type)	0.05 m ... 5.5 m [2]	0 m ... 25 m
Sensing range					
Axial	30 mm ... 200 mm [1]	1 mm ... 100 mm [1]	1 mm ... 800 mm [1] (depending on type)	0.05 m ... 6 m [2]	0 m ... 20 m
Radial	–	1 mm ... 100 mm [1]	1 mm ... 650 mm [1] (depending on type)	0.05 m ... 4.5 m [2]	0 m ... 19 m
Focus	–	✔ [3][4]	–		
Type of light	Visible red light				
Light source [5]	LED				
Wave length	632 nm	645 nm			
Adjustment	Potentiometer, 4 turns	Potentiometer, 270 °			Potentiometer, 270 ° [6]

[1] Object with 90 % reflectance (referred to standard white, DIN 5033)
[2] PL80A.
[3] Focused approx. 7 mm at 60 mm distance.
[4] Focused, focus approx. 7 mm at 60 mm .
[5] Average service life of 100,000 h at T_A = +25 °C.
[6] Receiver.

Mechanics/electronics

	VTB180-2	VTF180-2	VTE180-2	VL180-2	VSE180-2
Supply voltage [1]	10 V DC ... 30 V DC				
Ripple [2]	± 10 %				
Current consumption [3]	≤ 35 mA	≤ 30 mA			–
Current consumption, sender	–				20 mA [3]
Current consumption, receiver	–				15 mA [3]
Output type	PNP, open collector [4]/NPN, open collector [5] (depending on type)				
Switching mode	Light-switching [4]/dark-switching/Light/dark-switching [5] (depending on type)				
Switching mode selector	Selectable via L/D control wire				
Signal voltage PNP HIGH/LOW	Approx. V_S – 1.8 V / 0 V				
Signal voltage NPN HIGH/LOW	Approx. V_S / < 1.8 V				
Output current $I_{max.}$	≤ 100 mA				
Response time [6]	≤ 1 ms	≤ 0.5 ms			
Switching frequency [7]	≤ 500 Hz	1,000 Hz			

	VTB180-2	VTF180-2	VTE180-2	VL180-2	VSE180-2
Connection type	Cable, 2 m [8]/Male connector, M12 (depending on type)				
Circuit protection	A [9], B [10], D [11]				
Protection class	III				
Weight					
Plastic, cable	62 g				124 g
Plastic, connector	18 g				36 g
Metal, cable	95 g				190 g
Metal, connector	47 g				94 g
Polarisation filter	–			✔	–
Housing material					
Plastic	PBT/PC				
Metal	Nickel-plated brass and PC				
Optics material	PMMA				
Enclosure rating	IP 67				
Items supplied	Fastening nuts (2 x)			Reflector P250, fastening nuts (2 x), Reflector P250 (depending on type)	Fastening nuts (4 x)
Ambient operating temperature	–25 °C ... +55 °C				
Ambient storage temperature	–40 °C ... +70 °C				

[1] Limit values, operation in short-circuit protected network max. 8 A.
[2] May not exceed or fall short of V_S tolerances.
[3] Without load.
[4] Control wire open: dark-switching D.ON.
[5] Control wire open: light-switching L.ON.
[6] Signal transit time with resistive load.
[7] With light/dark ratio 1:1.
[8] Do not bend below 0 °C.
[9] A = V_S connections reverse-polarity protected.
[10] B = inputs and output reverse-polarity protected.
[11] D = outputs overcurrent and short-circuit protected.

Selection aid

Sensor principle	Sensing range max.	Housing material	Model name	Page
Photoelectric proximity sensor	10 mm ... 350 mm	Metal	VTB180-2, metal	I-745
		Plastic	VTB180-2, plastic	I-745
	1 mm ... 140 mm	Metal	VTF180-2, metal	I-746
		Plastic	VTF180-2, plastic	I-746
	1 mm ... 500 mm	Metal	VTE180-2, metal, mid range	I-747
		Plastic	VTE180-2, plastic, mid range	I-747
	1 mm ... 1100 mm	Metal	VTE180-2, Metal, long range	I-748
		Plastic	VTE180-2, plastic, long range	I-748
Photoelectric retro-reflective sensor	0,05 m ... 7 m	Metal	VL180-2, metal	I-749
		Plastic	VL180-2, plastic	I-749
Through-beam photoelectric sensor	0 m ... 28 m	Metal	VSE180-2, metal	I-750
		Plastic	VSE180-2, plastic	I-750

Ordering information

Other models available at www.mysick.com/en/V180-2

VTB180-2, metal

- **Sensor principle:** photoelectric proximity sensor
- **Detection principle:** background suppression
- **Adjustment:** potentiometer, 4 turns

Sensing range max. [1]	Light spot size (distance)	Optical axis	Output type	Switching mode	Connection	Connection diagram	Model name	Part no.
10 mm ... 350 mm	Ø 15 mm (300 mm)	Axial	PNP	Light/dark-switching [2]	Cable, 4-wire 2 m	Cd-089	VTB180-2P41112	6043869
					Connector M12, 4-pin	Cd-087	VTB180-2P42412	6043870
				Light switching	Connector M12, 4-pin	Cd-066	VTB180-2F32412	6044019
			NPN	Light/dark-switching [3]	Cable, 4-wire 2 m	Cd-089	VTB180-2N41112	6043867
					Connector M12, 4-pin	Cd-087	VTB180-2N42412	6043868

[1] Object with 90 % reflectance (referred to standard white, DIN 5033)
[1] Control wire open: dark-switching D.ON.
[2] Control wire open: light-switching L.ON.

VTB180-2, plastic

- **Sensor principle:** photoelectric proximity sensor
- **Detection principle:** background suppression
- **Adjustment:** potentiometer, 4 turns

Sensing range max. [1]	Light spot size (distance)	Optical axis	Output type	Switching mode	Connection	Connection diagram	Model name	Part no.
10 mm ... 350 mm	Ø 15 mm (300 mm)	Axial	PNP	Light/dark-switching [1]	Cable, 4-wire 2 m	Cd-089	VTB180-2P41117	6043873
					Connector M12, 4-pin	Cd-087	VTB180-2P42417	6043874
				Light switching	Connector M12, 4-pin	Cd-066	VTB180-2F32417	6044020
			NPN	Light/dark-switching [2]	Cable, 4-wire 2 m	Cd-089	VTB180-2N41117	6043871
					Connector M12, 4-pin	Cd-087	VTB180-2N42417	6043872

[1] Object with 90 % reflectance (referred to standard white, DIN 5033)
[1] Control wire open: dark-switching D.ON.
[2] Control wire open: light-switching L.ON.

VTF180-2, metal

- **Sensor principle:** photoelectric proximity sensor
- **Detection principle:** background blanking
- **Adjustment:** potentiometer, 270 °

Sensing range max. [1]	Light spot size (distance)	Optical axis	Output type	Switching mode	Connection	Connection diagram	Model name	Part no.
1 mm ... 130 mm	Ø 8 mm (100 mm)	Radial	PNP	Light/dark-switching [2]	Cable, 4-wire 2 m	Cd-089	VTF180-2P41114	6043805
					Connector M12, 4-pin	Cd-087	VTF180-2P42414	6043806
				Light switching	Connector M12, 3-pin	Cd-066	VTF180-2F32414	6044023
			NPN	Light/dark-switching [3]	Cable, 4-wire 2 m	Cd-089	VTF180-2N41114	6043803
					Connector M12, 4-pin	Cd-087	VTF180-2N42414	6043804
1 mm ... 140 mm	Ø 8 mm (100 mm)	Axial	PNP	Light/dark-switching [2]	Cable, 4-wire 2 m	Cd-089	VTF180-2P41112	6041802
					Connector M12, 4-pin	Cd-087	VTF180-2P42412	6041803
				Light switching	Connector M12, 3-pin	Cd-066	VTF180-2F32412	6044021
			NPN	Light/dark-switching [3]	Cable, 4-wire 2 m	Cd-089	VTF180-2N41112	6041799
					Connector M12, 4-pin	Cd-087	VTF180-2N42412	6041801

[1] Object with 90 % reflectance (referred to standard white, DIN 5033)
[2] Control wire open: dark-switching D.ON.
[3] Control wire open: light-switching L.ON.

VTF180-2, plastic

- **Sensor principle:** photoelectric proximity sensor
- **Detection principle:** background blanking
- **Adjustment:** potentiometer, 270 °

Sensing range max. [1]	Light spot size (distance)	Optical axis	Output type	Switching mode	Connection	Connection diagram	Model name	Part no.
1 mm ... 130 mm	Ø 8 mm (100 mm)	Radial	PNP	Light/dark-switching [2]	Cable, 4-wire 2 m	Cd-089	VTF180-2P41119	6043810
					Connector M12, 4-pin	Cd-087	VTF180-2P42419	6043811
				Light switching	Connector M12, 4-pin	Cd-066	VTF180-2F32419	6044024
			NPN	Light/dark-switching [3]	Cable, 4-wire 2 m	Cd-089	VTF180-2N41119	6043807
					Connector M12, 4-pin	Cd-087	VTF180-2N42419	6043808
1 mm ... 140 mm	Ø 8 mm (100 mm)	Axial	PNP	Light/dark-switching [2]	Cable, 4-wire 2 m	Cd-089	VTF180-2P41117	6037479
					Connector M12, 4-pin	Cd-087	VTF180-2P42417	6037480
				Light switching	Connector M12, 3-pin	Cd-066	VTF180-2F32417	6044022
			NPN	Light/dark-switching [3]	Cable, 4-wire 2 m	Cd-089	VTF180-2N41117	6037477
					Connector M12, 4-pin	Cd-087	VTF180-2N42417	6037478

[1] Object with 90 % reflectance (referred to standard white, DIN 5033)
[2] Control wire open: dark-switching D.ON.
[3] Control wire open: light-switching L.ON.

VTE180-2, metal, mid range

- **Sensor principle:** photoelectric proximity sensor
- **Detection principle:** background blanking
- **Adjustment:** potentiometer, 270 °

Sensing range max. [1]	Light spot size (distance)	Optical axis	Output type	Switching mode	Connection	Connection diagram	Model name	Part no.
1 mm ... 500 mm	Ø 20 mm (400 mm)	Axial	PNP	Light/dark-switching [2]	Cable, 4-wire 2 m	Cd-089	VTE180-2P41142	6041806
					Connector M12, 4-pin	Cd-087	VTE180-2P42442	6041807
				Light switching	Connector M12, 3-pin	Cd-066	VTE180-2F32342	6042576
			NPN	Light/dark-switching [3]	Cable, 4-wire 2 m	Cd-089	VTE180-2N41142	6041804
					Connector M12, 4-pin	Cd-087	VTE180-2N42442	6041805
1 mm ... 450 mm	Ø 20 mm (400 mm)	Radial	PNP	Light/dark-switching [2]	Cable, 4-wire 2 m	Cd-089	VTE180-2P41144	6043814
					Connector M12, 4-pin	Cd-087	VTE180-2P42444	6043815
				Light switching	Connector M12, 3-pin	Cd-066	VTE180-2F32444	6044025
			NPN	Light/dark-switching [3]	Cable, 4-wire 2 m	Cd-089	VTE180-2N41144	6043812
					Connector M12, 4-pin	Cd-087	VTE180-2N42444	6043813

[1] Object with 90 % reflectance (referred to standard white, DIN 5033)
[2] Control wire open: dark-switching D.ON.
[3] Control wire open: light-switching L.ON.

VTE180-2, plastic, mid range

- **Sensor principle:** photoelectric proximity sensor
- **Detection principle:** background blanking
- **Adjustment:** potentiometer, 270 °

Sensing range max. [1]	Light spot size (distance)	Optical axis	Output type	Switching mode	Connection	Connection diagram	Model name	Part no.
1 mm ... 500 mm	Ø 20 mm (400 mm)	Axial	PNP	Light/dark-switching [2]	Cable, 4-wire 2 m	Cd-089	VTE180-2P41147	6037483
					Connector M12, 4-pin	Cd-087	VTE180-2P42447	6037484
				Light switching	Connector M12, 3-pin	Cd-066	VTE180-2P32447	6043946
			NPN	Light/dark-switching [3]	Cable, 4-wire 2 m	Cd-089	VTE180-2N41147	6037481
					Connector M12, 4-pin	Cd-087	VTE180-2N42447	6037482
1 mm ... 450 mm	Ø 20 mm (400 mm)	Radial	PNP	Light/dark-switching [2]	Cable, 4-wire 2 m	Cd-089	VTE180-2P41149	6043818
					Connector M12, 4-pin	Cd-087	VTE180-2P42449	6043819
				Light switching	Connector M12, 3-pin	Cd-066	VTE180-2F32449	6044026
			NPN	Light/dark-switching [3]	Cable, 4-wire 2 m	Cd-089	VTE180-2N41149	6043816
					Connector M12, 4-pin	Cd-087	VTE180-2N42449	6043817

[1] Object with 90 % reflectance (referred to standard white, DIN 5033)
[2] Control wire open: dark-switching D.ON.
[3] Control wire open: light-switching L.ON.

VTE180-2, metal, long range

- **Sensor principle:** photoelectric proximity sensor
- **Detection principle:** energetic
- **Adjustment:** potentiometer, 270 °

Sensing range max. [1]	Light spot size (distance)	Optical axis	Output type	Switching mode	Connection	Connection diagram	Model name	Part no.
1 mm ... 1,100 mm	Ø 30 mm (800 mm)	Axial	PNP	Light/dark-switching [2]	Cable, 4-wire 2 m	Cd-089	VTE180-2P41182	6041810
					Connector M12, 4-pin	Cd-087	VTE180-2P42482	6041811
				Light switching	Connector M12, 3-pin	Cd-066	VTE180-2P32482	6043945
			NPN	Light/dark-switching [3]	Cable, 4-wire 2 m	Cd-089	VTE180-2N41182	6041808
					Connector M12, 4-pin	Cd-087	VTE180-2N42482	6041809
1 mm ... 900 mm	Ø 30 mm (800 mm)	Radial	PNP	Light/dark-switching [2]	Cable, 4-wire 2 m	Cd-089	VTE180-2P41184	6043822
					Connector M12, 4-pin	Cd-087	VTE180-2P42484	6043823
				Light switching	Connector M12, 3-pin	Cd-066	VTE180-2F32484	6044028
			NPN	Light/dark-switching [3]	Cable, 4-wire 2 m	Cd-089	VTE180-2N41184	6043820
					Connector M12, 4-pin	Cd-087	VTE180-2N42484	6043821

[1] Object with 90 % reflectance (referred to standard white, DIN 5033)
[2] Control wire open: dark-switching D.ON.
[3] Control wire open: light-switching L.ON.

VTE180-2, plastic, long range

- **Sensor principle:** photoelectric proximity sensor
- **Detection principle:** energetic
- **Adjustment:** potentiometer, 270 °

Sensing range max. [1]	Light spot size (distance)	Optical axis	Output type	Switching mode	Connection	Connection diagram	Model name	Part no.
1 mm ... 900 mm	Ø 30 mm (800 mm)	Radial	PNP	Light/dark-switching [2]	Cable, 4-wire 2 m	Cd-089	VTE180-2P41189	6043826
					Connector M12, 4-pin	Cd-087	VTE180-2P42489	6043827
				Light switching	Connector M12, 3-pin	Cd-066	VTE180-2F32489	6044029
			NPN	Light/dark-switching [3]	Cable, 4-wire 2 m	Cd-089	VTE180-2N41189	6043824
					Connector M12, 4-pin	Cd-087	VTE180-2N42489	6043825
1 mm ... 1,100 mm	Ø 30 mm (800 mm)	Axial	PNP	Light/dark-switching [2]	Cable, 4-wire 2 m	Cd-089	VTE180-2P41187	6037487
					Connector M12, 4-pin	Cd-087	VTE180-2P42487	6037488
				Light switching [2]	Connector M12, 3-pin	Cd-066	VTE180-2F32487	6044027
			NPN	Light/dark-switching [3]	Cable, 4-wire 2 m	Cd-089	VTE180-2N41187	6037485
					Connector M12, 4-pin	Cd-087	VTE180-2N42487	6037486

[1] Object with 90 % reflectance (referred to standard white, DIN 5033)
[2] Control wire open: dark-switching D.ON.
[3] Control wire open: light-switching L.ON.

VL180-2, metal

- **Sensor principle:** photoelectric retro-reflective sensor
- **Detection principle:** standard optics
- **Adjustment:** potentiometer, 270 °

Sensing range max. [1]	Light spot size (distance)	Optical axis	Output type	Switching mode	Connection	Connection diagram	Model name	Part no.
0.05 m ... 7 m	Ø 400 mm (6 m)	Axial	PNP	Light switching	Connector M12, 4-pin	Cd-066	VL180-2F32331	6043458
				Light/dark-switching [2]	Cable, 4-wire 2 m	Cd-089	VL180-2P41131	6041818
					Connector M12, 4-pin	Cd-087	VL180-2P42431	6041819
				Dark-switching	Connector M12, 4-pin	Cd-066	VL180-2P32431	6044030
			NPN	Light/dark-switching [3]	Cable, 4-wire 2 m	Cd-089	VL180-2N41131	6041816
					Connector M12, 4-pin	Cd-087	VL180-2N42431	6041817
0.05 m ... 5.5 m	Ø 270 mm (4 m)	Radial	PNP	Light/dark-switching [2]	Cable, 4-wire 2 m	Cd-089	VL180-2P41133	6043832
					Connector M12, 4-pin	Cd-087	VL180-2P42433	6043834
				Dark-switching	Connector M12, 3-pin	Cd-066	VL180-2P32433	6044032
			NPN	Light/dark-switching [3]	Connector M12, 4-pin	Cd-087	VL180-2N42433	6043830

[1] PL80A.
[2] Control wire open: dark-switching D.ON.
[3] Control wire open: light-switching L.ON.

VL180-2, plastic

- **Sensor principle:** photoelectric retro-reflective sensor
- **Detection principle:** standard optics
- **Adjustment:** potentiometer, 270 °

Sensing range max. [1]	Light spot size (distance)	Optical axis	Output type	Switching mode	Connection	Connection diagram	Model name	Part no.
0.05 m ... 7 m	Ø 400 mm (6 m)	Axial	PNP	Light/dark-switching [2]	Cable, 4-wire 2 m	Cd-089	VL180-2P41136	6037495
					Connector M12, 4-pin	Cd-087	VL180-2P42436	6037496
			NPN	Light/dark-switching [3]	Cable, 4-wire 2 m	Cd-089	VL180-2N41136	6037493
					Connector M12, 4-pin	Cd-087	VL180-2N42436	6037494
0.05 m ... 5.5 m	Ø 270 mm (4 m)	Radial	PNP	Light/dark-switching [2]	Cable, 4-wire 2 m	Cd-089	VL180-2P41138	6043837
					Connector M12, 4-pin	Cd-087	VL180-2P42438	6043838
				Dark-switching	Connector M12, 3-pin	Cd-066	VL180-2P32438	6044033
			NPN	Light/dark-switching [3]	Cable, 4-wire 2 m	Cd-089	VL180-2N41138	6043835
					Connector M12, 4-pin	Cd-087	VL180-2N42438	6043836

[1] PL80A.
[2] Control wire open: dark-switching D.ON.
[3] Control wire open: light-switching L.ON.

VSE180-2, metal

- **Sensor principle:** through-beam photoelectric sensor
- **Adjustment:** potentiometer, 270 ° (Receiver.)

Sensing range max.	Light spot size (distance)	Optical axis	Output type	Switching mode	Connection	Connection diagram	Model name	Part no.
0 m ... 28 m	Ø 1,100 mm (20 m)	Axial	PNP	Light/dark-switching [1]	Cable, 4-wire 2 m	Cd-058	VSE180-2P41132	6041822
					Connector M12, 4-pin	Cd-060	VSE180-2P42432	6041823
			NPN	Light/dark-switching [2]	Cable, 4-wire 2 m	Cd-058	VSE180-2N41132	6041820
					Connector M12, 4-pin	Cd-060	VSE180-2N42432	6041821
0 m ... 25 m	Ø 1,100 mm (20 m)	Radial	PNP	Light/dark-switching [1]	Cable, 4-wire 2 m	Cd-058	VSE180-2P41134	6043849
					Connector M12, 4-pin	Cd-060	VSE180-2P42434	6043850
				Dark-switching	Connector M12, 3-pin	Cd-057	VSE180-2P32434	6044036
			NPN	Light/dark-switching [2]	Cable, 4-wire 2 m	Cd-058	VSE180-2N41134	6043847
					Connector M12, 4-pin	Cd-060	VSE180-2N42434	6043848

[1] Control wire open: dark-switching D.ON.

[2] Control wire open: light-switching L.ON.

VSE180-2, plastic

- **Sensor principle:** through-beam photoelectric sensor
- **Adjustment:** potentiometer, 270 ° (Receiver.)

Sensing range max.	Light spot size (distance)	Optical axis	Output type	Switching mode	Connection	Connection diagram	Model name	Part no.
0 m ... 28 m	Ø 1,100 mm (20 m)	Axial	PNP	Light/dark-switching [1]	Cable, 4-wire 2 m	Cd-058	VSE180-2P41137	6037499
					Connector M12, 4-pin	Cd-060	VSE180-2P42437	6037500
			NPN	Light/dark-switching [2]	Cable, 4-wire 2 m	Cd-058	VSE180-2N41137	6037497
					Connector M12, 4-pin	Cd-060	VSE180-2N42437	6037498
0 m ... 25 m	Ø 1,100 mm (20 m)	Radial	PNP	Light/dark-switching [1]	Cable, 4-wire 2 m	Cd-058	VSE180-2P41139	6043853
					Connector M12, 4-pin	Cd-060	VSE180-2P42439	6043854
				Dark-switching	Connector M12, 3-pin	Cd-057	VSE180-2P32439	6044037
			NPN	Light/dark-switching [2]	Cable, 4-wire 2 m	Cd-058	VSE180-2N41139	6043851
					Connector M12, 4-pin	Cd-060	VSE180-2N42439	6043852

[1] Control wire open: dark-switching D.ON.

[2] Control wire open: light-switching L.ON.

Dimensional drawings

Dimensions in mm (inch)

VTF180-2, VTE180-2, VTB180-2, metal, axial

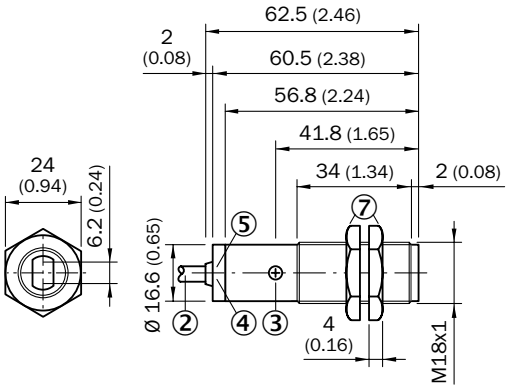

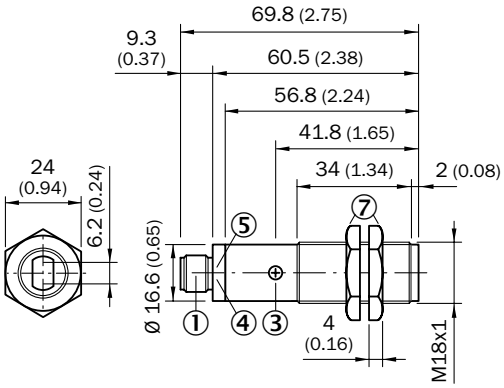

① Connector M12, 4-pin
② Connection cable 2 m
③ Sensitivity adjustment 270°
④ LED indicator orange: switching output active
⑤ LED indicator green: strength indicator
⑦ Fastening nuts (2 x); 24 mm hex, metal

VTF180-2, VTE180-2, VTB180-2, plastic, axial

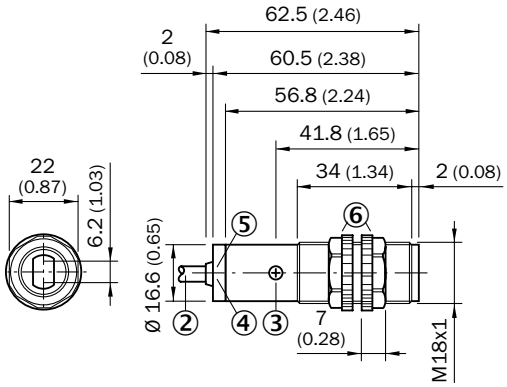

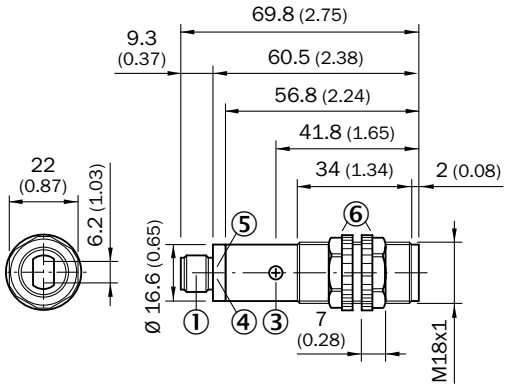

① Connector M12, 4-pin
② Connection cable 2 m
③ Sensitivity control (potentiometer, 270°)
④ LED indicator orange: switching output active
⑤ LED indicator green: strength indicator
⑥ Fastening nuts (2 x); width across 22, PC

VTF180-2, VTE180-2, metal, radial

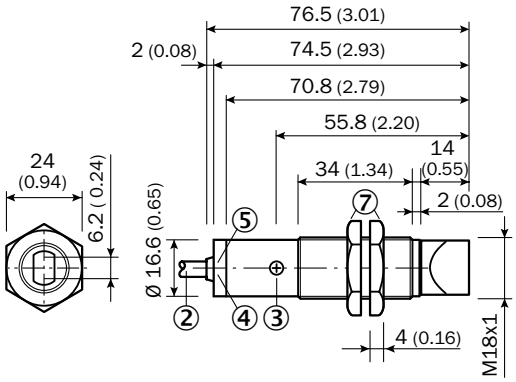

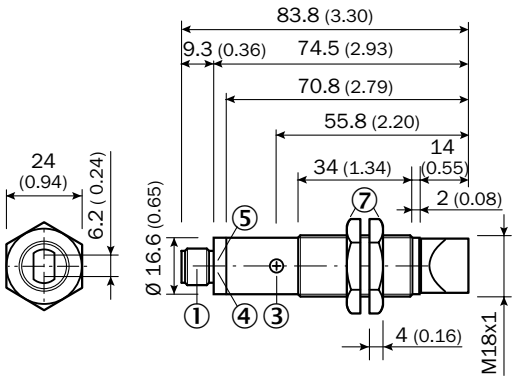

① Connector M12, 3-pin / Connector M12, 3-pin
② Connection cable 2 m
③ Sensitivity control; Potentiometer 270°
④ LED indicator orange: switching output active
⑤ LED indicator green, stability indicator: LED lights continuously = light reception < 0.9/> 1.1; LED off = light reception > 0.9 / < 1.1
⑦ Metal housing, fastening nuts (2 x); width across 24

VTF180-2, VTE180-2, plastic, radial

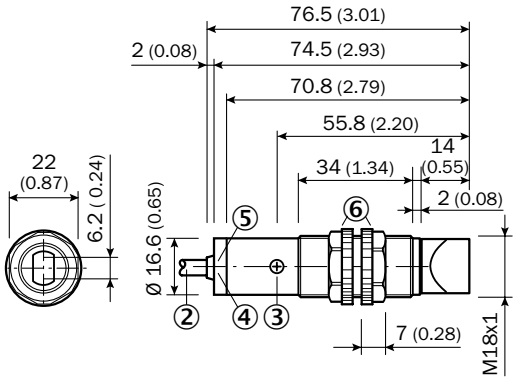

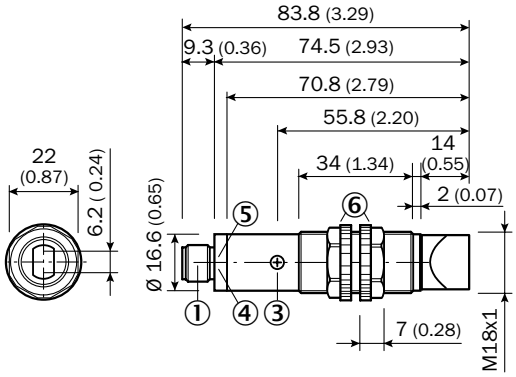

① Connector M12
② Connection cable 2 m
③ Sensitivity control; Potentiometer 270°
④ LED indicator orange: switching output active
⑤ LED indicator green, stability indicator: LED lights continuously = light reception < 0.9/> 1.1; LED off = light reception > 0.9 / < 1.1
⑥ Fastening nuts (2 x); width across 22, PC

VL180-2, metal, axial

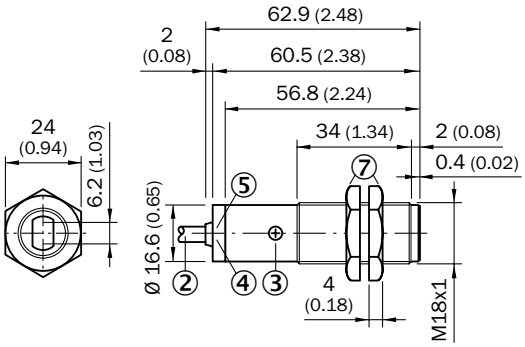

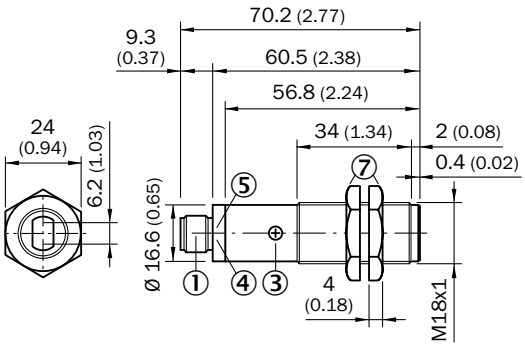

① Connector M12, 4-pin
② Connection cable 2 m
③ Sensitivity adjustment 270°
④ LED indicator orange: switching output active
⑤ LED indicator green: strength indicator
⑦ Fastening nuts (2 x); 24 mm hex, metal

VL180-2, metal, radial

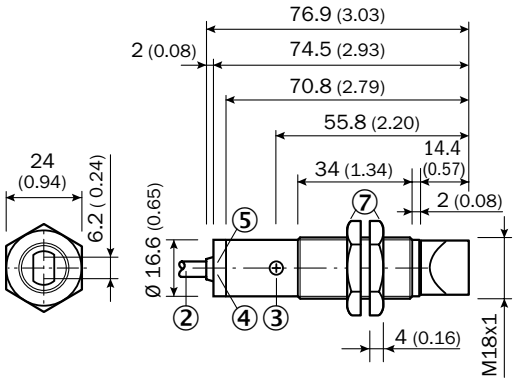

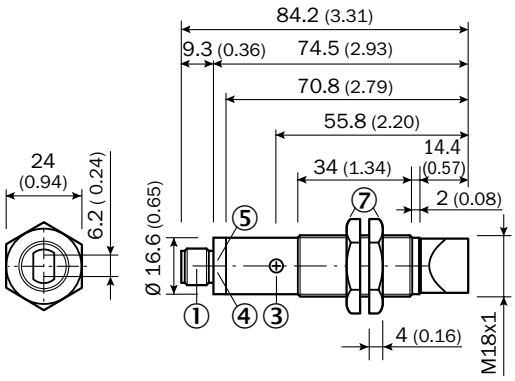

① Connector M12, 3-pin / Connector M12, 3-pin
② Connection cable 2 m
③ Sensitivity control; Potentiometer 270°
④ LED indicator orange: switching output active
⑤ LED indicator green, stability indicator: LED lights continuously = light reception < 0.9/> 1.1; LED off = light reception > 0.9 / < 1.1
⑦ Metal housing, fastening nuts (2 x); width across 24

VL180-2, plastic, axial

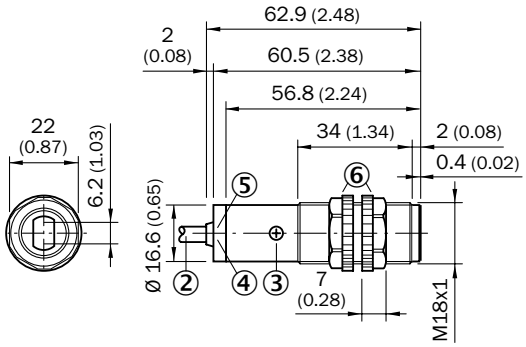

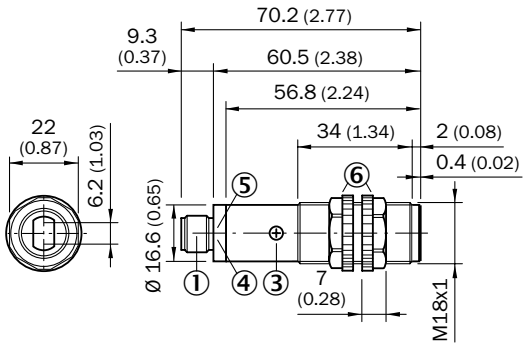

① Connector M12, 4-pin
② Connection cable 2 m
③ Sensitivity control (potentiometer, 270°)
④ LED indicator orange: switching output active
⑤ LED indicator green: strength indicator
⑥ Fastening nuts (2 x); width across 22, PC

VL180-2, plastic, radial

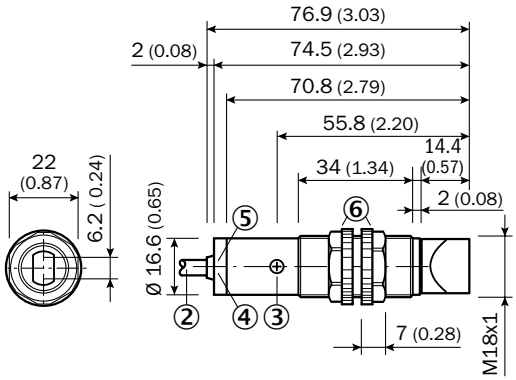

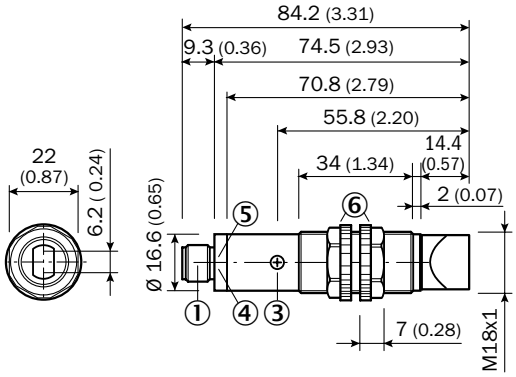

① Connector M12
② Connection cable 2 m
③ Sensitivity control; Potentiometer 270°
④ LED indicator orange: switching output active
⑤ LED indicator green, stability indicator: LED lights continuously = light reception < 0.9/> 1.1; LED off = light reception > 0.9 / < 1.1
⑥ Fastening nuts (2 x); width across 22, PC

VSE180-2, metal, axial

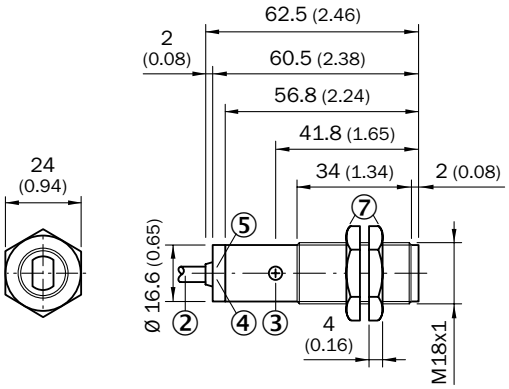

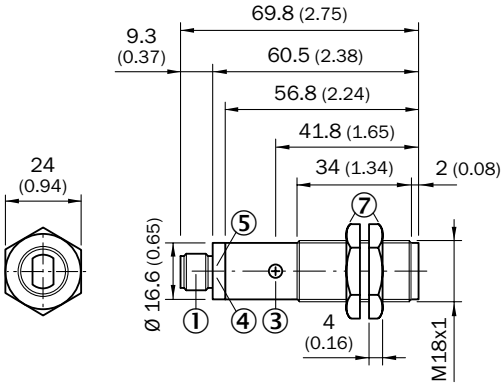

① Connector M12, 4-pin
② Connection cable 2 m
③ Sensitivity adjustment 270°
④ LED indicator orange: switching output active
⑤ LED indicator green: strength indicator
⑦ Fastening nuts (2 x); 24 mm hex, metal

VSE180-2, metal, radial

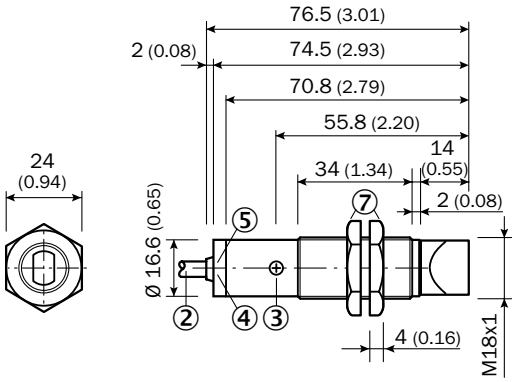

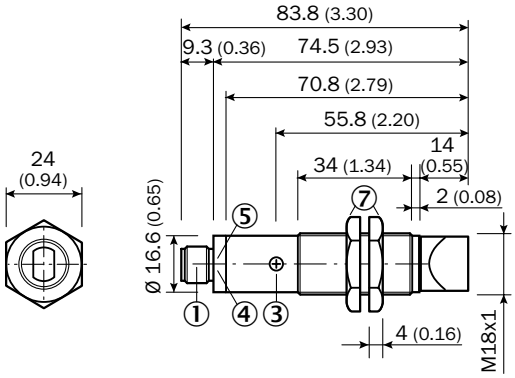

① Connector M12, 3-pin / Connector M12, 3-pin
② Connection cable 2 m
③ Sensitivity control; Potentiometer 270° (only VE)
④ LED indicator orange: switching output active (only VE)
⑤ LED indicator green, stability indicator (only VE): LED lights continuously = light reception < 0.9/> 1.1; LED off = light reception > 0.9 / < 1.1
⑦ Metal housing, fastening nuts (2 x); width across 24

VSE180-2, plastic, axial

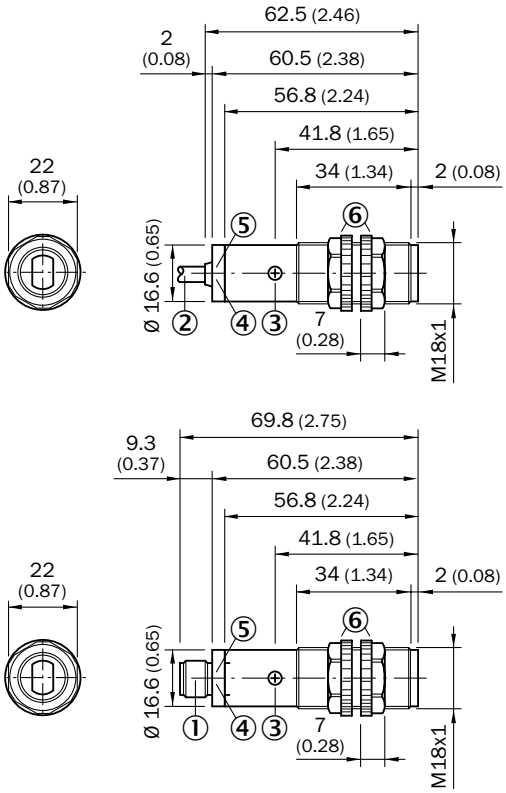

① Connector M12, 4-pin
② Connection cable 2 m
③ Sensitivity adjustment 270°
④ LED indicator orange
⑤ LED indicator green: strength indicator
⑥ Fastening nuts (2 x); width across 22, PC

VSE180-2, plastic, radial

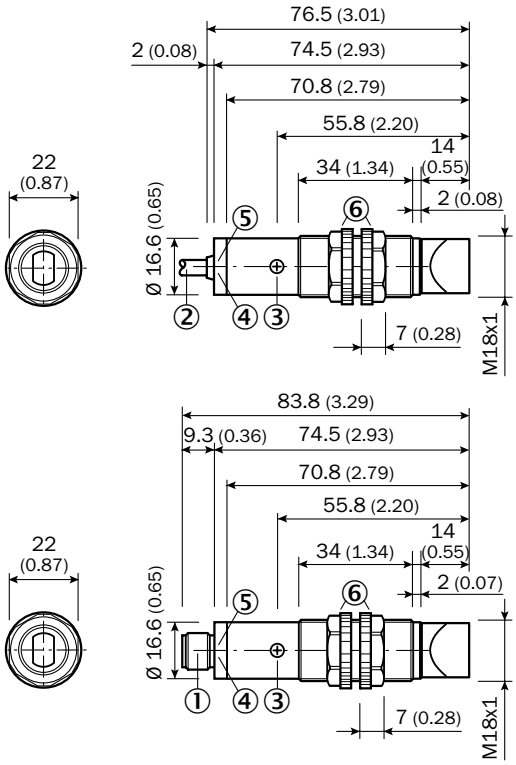

① Connector M12
② Connection cable 2 m
③ Sensitivity control; Potentiometer 270° (only VE)
④ LED indicator orange: switching output active (only VE)
⑤ LED indicator green, stability indicator (only VE): LED lights continuously = light reception < 0.9/> 1.1; LED off = light reception > 0.9 / < 1.1
⑥ Fastening nuts (2 x); width across 22, PC

Adjustments

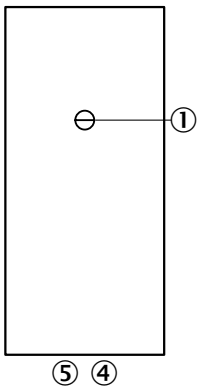

③ Sensitivity adjustment 270°
④ LED indicator orange: switching output active
⑤ LED indicator green

Characteristic curves

Black-white shift

VTB180-2, 350 mm

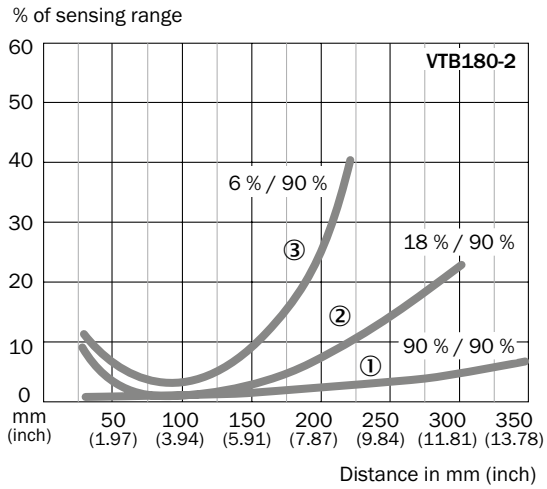

① Sensing range on white, 90 % remission
② Sensing range on gray, 18 % remission
③ Sensing range on black, 6 % remission

VTF180-2, 130 mm, radial

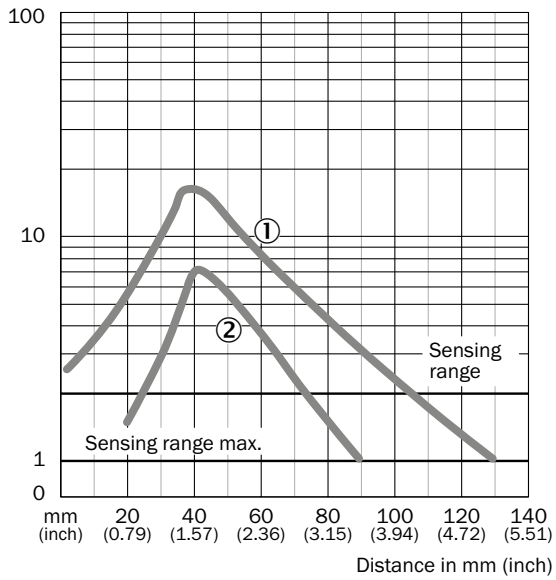

① Sensing range on white, 90 % remission
② Sensing range on gray, 18 % remission

VTF180-2, 140 mm, axial

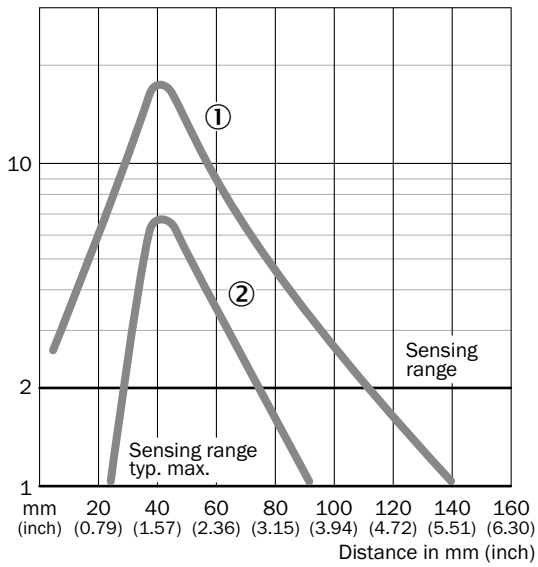

① Sensing range on white, 90 % remission
② Sensing range on gray, 18 % remission

VTE180-2, 450 mm, radial

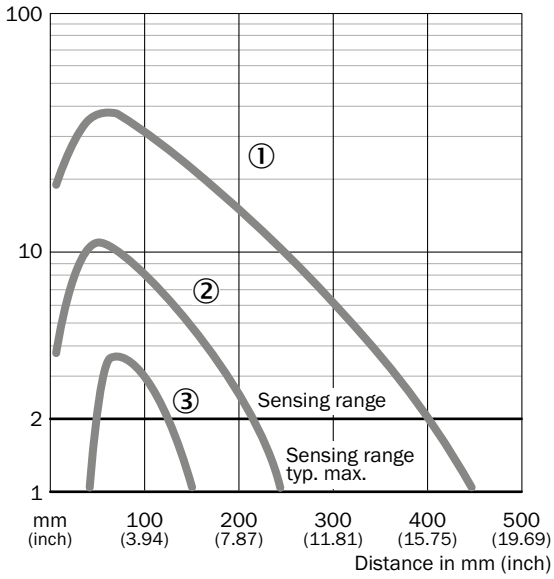

① Sensing range on white, 90 % remission
② Sensing range on gray, 18 % remission
③ Sensing range on black, 6 % remission

VTE180-2, 500 mm, axial

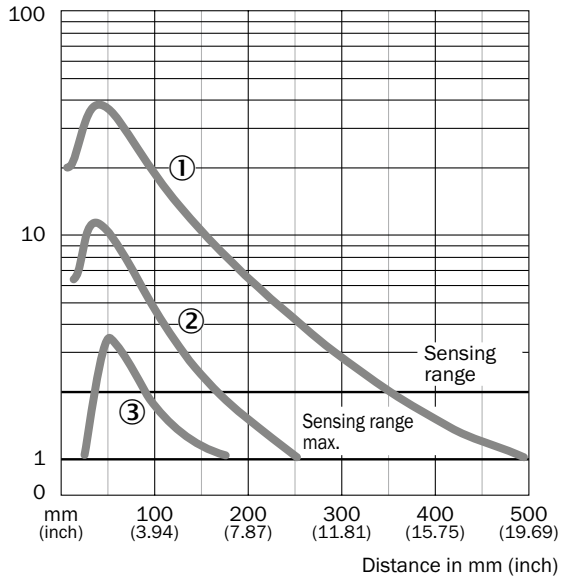

① Sensing range on white, 90 % remission
② Sensing range on gray, 18 % remission
③ Sensing range on black, 6 % remission

VTE180-2, 900 mm, radial

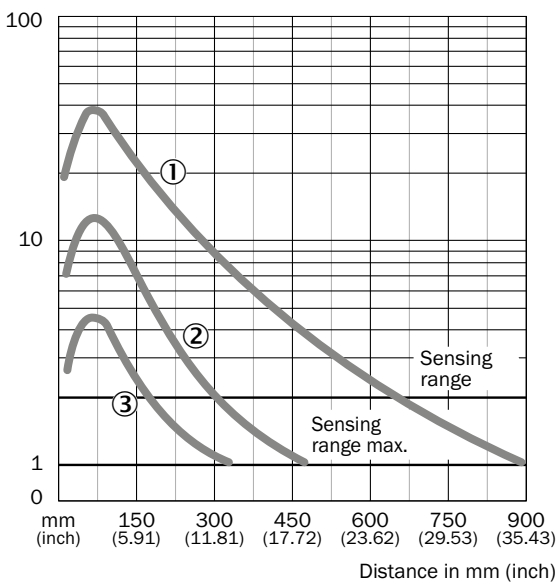

① Sensing range on white, 90 % remission
② Sensing range on gray, 18 % remission
③ Sensing range on black, 6 % remission

VTE180-2, 1.100 mm, axial

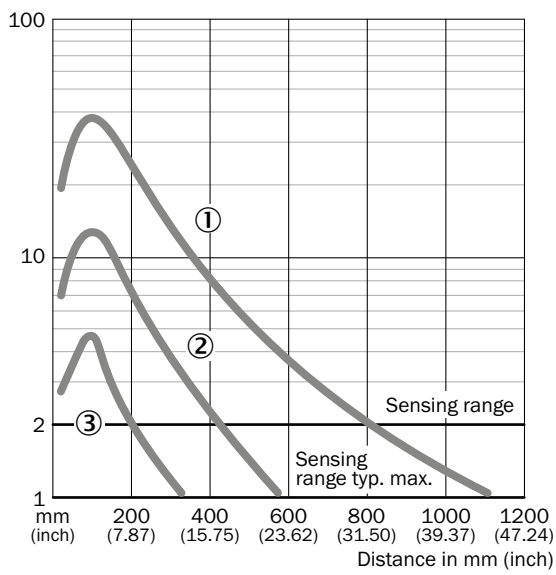

① Sensing range on white, 90 % remission
② Sensing range on gray, 18 % remission
③ Sensing range on black, 6 % remission

Operating reserve

VL180-2, 7 m, axial

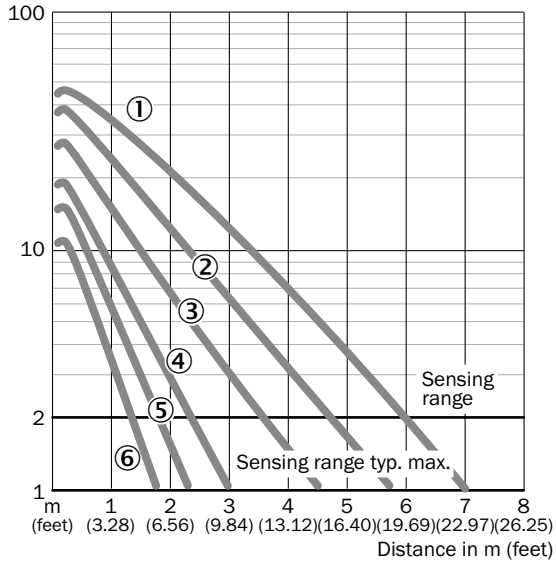

① PL80A
② P250, PL40A, PL50A, C110A
③ PL30A, PL31A
④ PL20A
⑤ P45
⑥ Reflective tape Diamond Grade

VL180-2, 5.5 m, axial

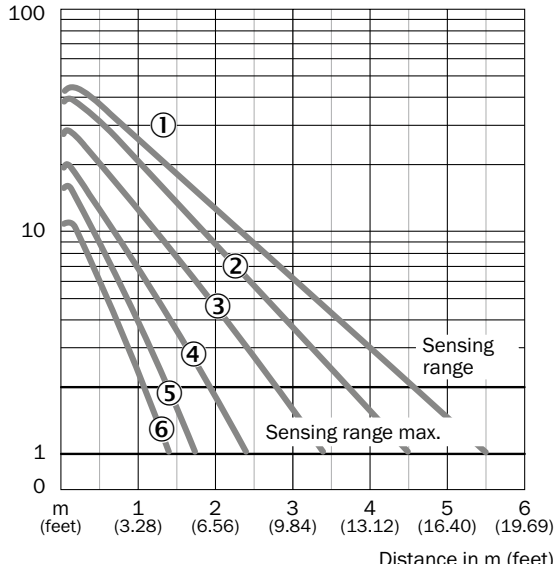

① PL80A
② P250, PL40A, PL50A, C110A
③ PL30A, PL31A
④ PL20A
⑤ P45
⑥ Reflective tape Diamond Grade

VSE180-2, 28 m, axial

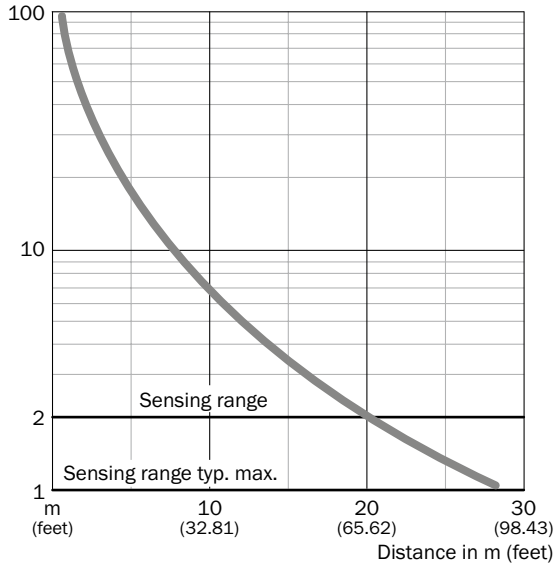

VSE180-2, 25 m, radial

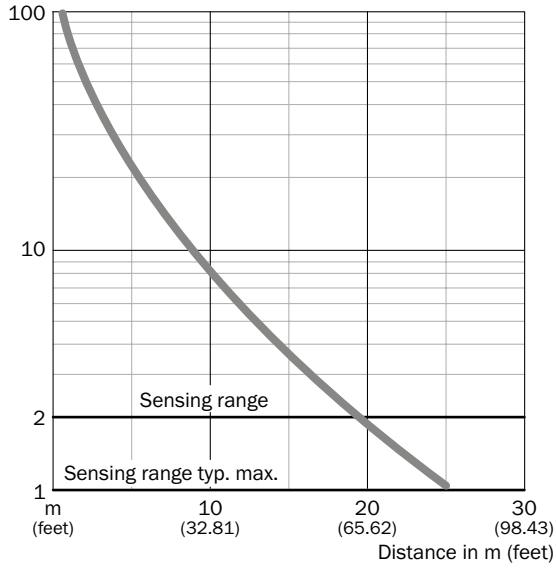

Bar diagrams

VTB180-2, 350 mm

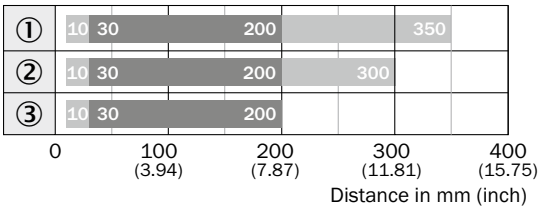

Sensing range Sensing range max.

① Sensing range on white, 90 % remission
② Sensing range on gray, 18 % remission
③ Sensing range on black, 6 % remission

VTF180-2, 130 mm, radial

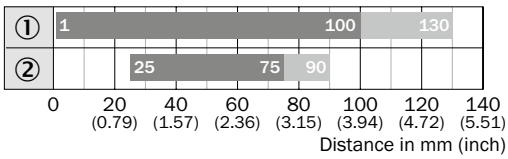

Sensing range Sensing range max.

① Sensing range on white, 90 % remission
② Sensing range on gray, 18 % remission

VTF180-2, 140 mm, axial

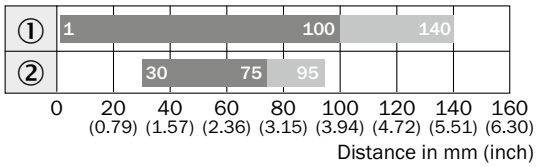

Sensing range Sensing range max.

① Sensing range on white, 90 % remission
② Sensing range on gray, 18 % remission

VTE180-2, 450 mm, radial

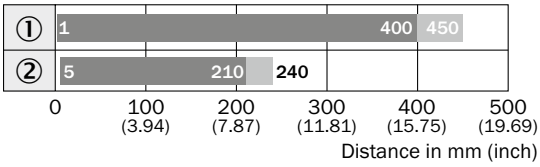

Sensing range Sensing range max.

① Sensing range on white, 90 % remission
② Sensing range on gray, 18 % remission

VTE180-2, 500 mm, axial

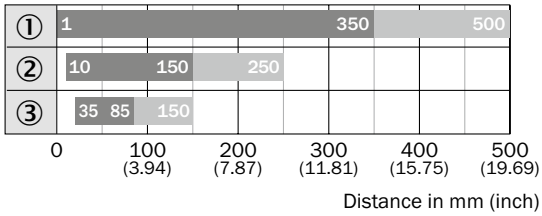

Sensing range Sensing range max.

① Sensing range on white, 90 % remission
② Sensing range on gray, 18 % remission
③ Sensing range on black, 6 % remission

VTE180-2, 900 mm, radial

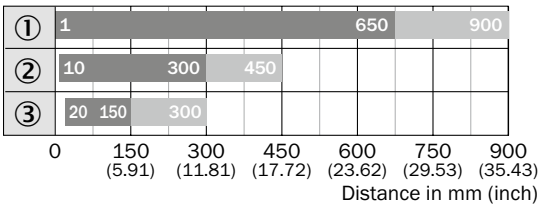

Sensing range Sensing range max.

① Sensing range on white, 90 % remission
② Sensing range on gray, 18 % remission
③ Sensing range on black, 6 % remission

VTE180-2, 1.100 mm, axial

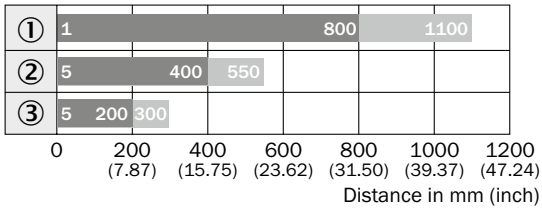

Sensing range Sensing range max.

VL180-2, 7 m, axial

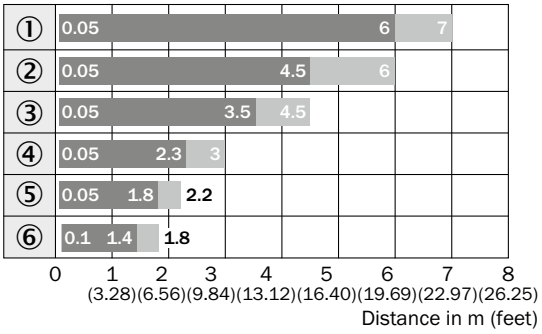

Sensing range Sensing range max.

① PL80A
② P250, PL40A, PL50A, C110A
③ PL30A, PL31A
④ PL20A
⑤ P45
⑥ Reflective tape Diamond Grade

VL180-2, 5.5 m, radial

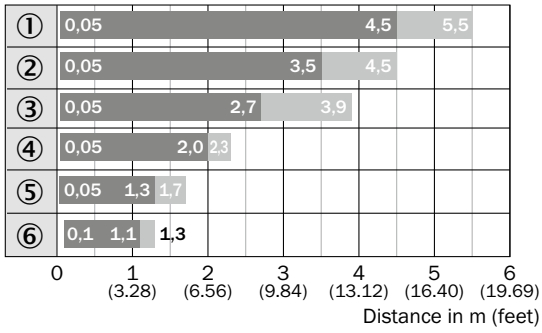

Sensing range Sensing range max.

① PL80A
② P250, PL40A, PL50A, C110A
③ PL30A, PL31A
④ PL20A
⑤ P45
⑥ Reflective tape Diamond Grade

VSE180-2, 28 m, axial

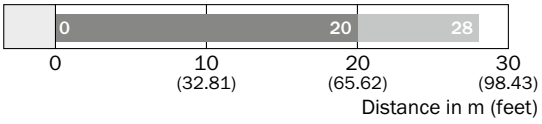

Sensing range Sensing range typ. max.

VSE180-2, 25 m, radial

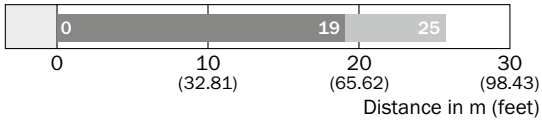

Sensing range Sensing range typ. max.

Light spot diameter

VTB180-2

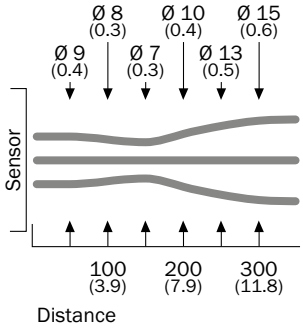

VTF180-2

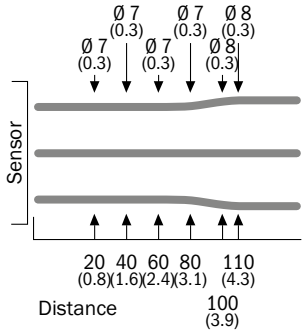

VTE180-2, 400 mm, 500 mm

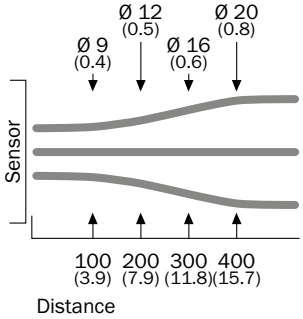

VTE180-2, 900 mm, 1.100 mm

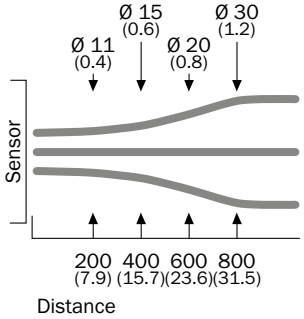

VL180-2

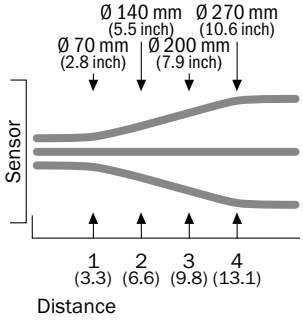

VSE180-2, 28 m, axial

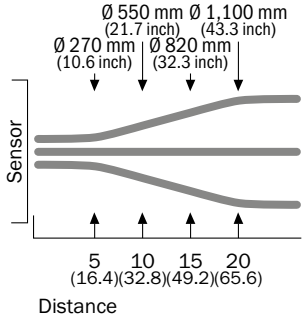

Connection diagram

Cd-057

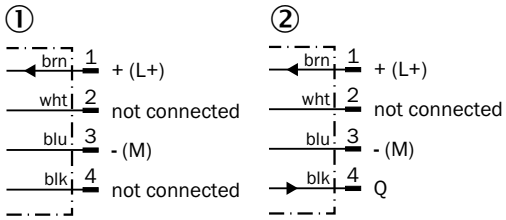

① Sender
② Receiver

Cd-058

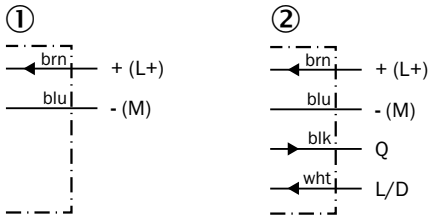

① Sender
② Receiver

Cd-060

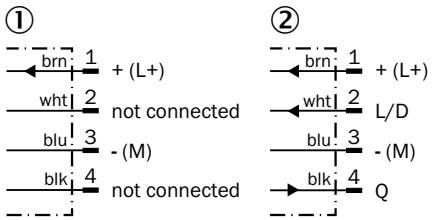

① Sender
② Receiver

Cd-066

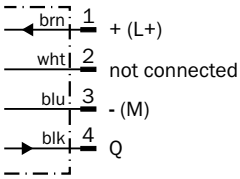

Cd-087

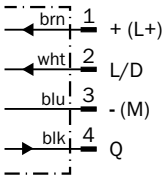

Cd-089

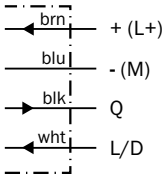

Recommended accessories

Mounting brackets/plates

Mounting plates

Figure	Material	Description	Model name	Part no.
	Stainless steel	Mounting plate for M18 housing	BEF-WG-M18N	5320948
		Mounting bracket	BEF-WN-M18N	5320947

Plug connectors and cables

Connecting cable (female connector-open)

- **Cable material:** PVC
- **Connector material:** PVC

Figure	Connection type head A	Connection type head B	Connecting cable	Enclosure rating	Model name	Part no.
	Female connector, M12, 4-pin, straight	Cable, open conductor heads	2 m, 4-wire	IP 67, IP 69K	DOL-1204-G02MN	6028128
			5 m, 4-wire	IP 67, IP 69K	DOL-1204-G05MN	6028130
	Female connector, M12, 4-pin, angled	Cable, open conductor heads	2 m, 4-wire	IP 67, IP 69K	DOL-1204-W02MN	6028129
			5 m, 4-wire	IP 67, IP 69K	DOL-1204-W05MN	6028131

Universal bar clamp systems

Figure	Material	Description	Model name	Part no.
	Stainless steel 1.4571 (sheet), Stainless steel 1.4408 (clamp)	Plate N06N for universal clamp bracket, M18	BEF-KHS-N06N	2051622

Reflectors

Angular

Figure	Material	Description	Model name	Part no.
	Plastic	Chemically resistant, screw connection, 47 mm x 47 mm	P250 CHEM	5321097
	PMMA/ABS	Rectangular, screw connection, 80 mm x 80 mm	PL80A	1003865

Fine triple reflectors

Figure	Material	Description	Model name	Part no.
	Plastic	Fine triple, chemically resistant, screw connection, 18 mm x 18 mm	PL10F CHEM	5321636
		Fine triple, chemically resistant, screw connection, suitable for laser sensors, 16 mm x 38 mm	PL20F-CHEM	5326089

Reflective tape

Figure	Description	Model name	Part no.
	Self-adhesive, 50 mm x 60 mm	REF-IRF-56	5314244

Special reflectors

Figure	Material	Description	Model name	Part no.
	PMMA/ABS	Antifog, for prevention of moisture fogging on the reflection area, screw connection, 56 mm x 37 mm	PL40A Antifog	5322011
	Plastic	Rectangular, screw connection M3, countersunk screw head, chemical resistent, 56 mm x 37 mm	PL40B-CHEM	5326088
	Stainless steel V4A (1.4404, 316L)	Stainless steel reflector, hygienic design, chemically resistant, Enclosure rating IP 69K, D12-adapter shaft, 25 mm x 25 mm	PLH25-D12	2063404
		Stainless steel reflector, hygienic design, chemically resistant, Enclosure rating IP 69K, M12-adapter thread, 25 mm x 25 mm	PLH25-M12	2063403
		Stainless steel reflector, wash-down design, chemically resistant, Enclosure rating IP 69K, screw connection, 14 mm x 14 mm	PLV14-A	2063405

Terminal and alignment brackets

Alignment brackets

Figure	Material	Description	Model name	Part no.
	Plastic	Mounting bracket with ball-and-socket	BEF-WN-M18-ST02	5312973

Terminal brackets

Figure	Material	Description	Model name	Part no.
	Plastic (PA12), glass-fiber reinforced	Clamping block for round sensors M18, without fixed stop	BEF-KH-M18	2051481
		Clamping block for round sensors M18, with fixed stop	BEF-KHF-M18	2051482
	Stainless steel	Mounting ring	BEF-WN-MH15-2V	4053358

→ **For additional accessories, please see page L-861**

Improve performance and reduce downtime with W15 sensors

Class 2
LISTED 87LL

SIRIC®
optical ASIC
invented by SICK

Product description

The high-performance W15 photoelectric sensor family is flexible and versatile, combining a modern industrial design with SICK technology for an optimum application solution.

These sensors use SICK's third generation custom ASIC that incorporates OES3 technology to provide exceptional background suppression at an extended range. The W15 series includes four different sensing modes, including the WTB15, WTE15, WL15 and WSE15 to provide a complete product offering.

An attractive feature of this series is its flexible mounting options. The W15 features 18 mm front mount and side mount through holes. The M18 front mount enables the sensor to be flush mounted with a snap ring, which prevents the disruption of product flow in conveyor systems.

At a glance

- M18 front mount using plastic nut or snap ring, side assembly with 24.1 mm through holes
- Flush mounting possible using the snap ring
- Transparent back cover
- Best-in-class background suppression and red PinPoint LED
- High immunity to ambient light
- Highly visible LED indicators

Your benefits

- Completely compatible with many competitor models, making it easy install and commission
- Flush mounting reduces setup time and prevents obstructions to material flow on conveyor systems
- Clearly visible LED indicators reduce setup time and simplify troubleshooting
- Reliable detection due to best-in-class background suppression that ignores stray background reflections, detects multi-colored/shiny objects and provides high immunity to ambient light
- Customer-specific options reduce material and labor costs

Additional information

→ **www.mysick.com/en/W15**

For more information, just enter the link or scan the QR code and get direct access to technical data, CAD design models, operating instructions, software, application examples and much more.

Detailed technical data

Features

	WTB15	WTE15	WL15	WSE15
Sensor principle	Photoelectric proximity sensor		Photoelectric retro-reflective sensor	Through-beam photo-electric sensor
Detection principle	Background suppres-sion	Energetic	Standard optics	–
Dimensions (W x H x D)	16.2 mm x 48.5 mm x 31.9 mm			
Housing design (light emission)	Hybrid			
Thread diameter (housing)	M18 x 1			
Sensing range max.	4 mm ... 200 mm [1]	10 mm ... 350 mm [1]	0.035 m ... 5 m [2]	0 m ... 5 m
Sensing range	15 mm ... 200 mm	10 mm ... 250 mm	0.035 m ... 3.5 m	0 m ... 3.8 m
Type of light	Visible red light	Infrared light	Visible red light	
Light source [3]	PinPoint LED	LED		
Light spot size (distance)	Ø 7 mm (50 mm)	Ø 50 mm (350 mm)	Ø 140 mm (3.5 m)	160 mm (4 m)
Angle of dispersion	–	4.5°	1.5°	
Wave length	650 nm	950 nm	650 nm	
Adjustment	Potentiometer, 5 turns		–	
Time type	–		Time delay off / adjustable via time control (depending on type)	–
Delay time	–		0 s ... 2 s (depending on type)	–

[1] Object with 90 % reflectance (referred to standard white, DIN 5033)

[2] PL80A.

[3] Average service life of 100,000 h at T_A = +25 °C.

Mechanics/electronics

	WTB15	WTE15	WL15	WSE15
Supply voltage [1]	10 V DC ... 30 V DC			
Ripple [2]	< 5 V_{pp}	≤ 5 V_{pp}		
Power consumption [3]	≤ 30 mA			
Output type	PNP, NPN, PNP/NPN (depending on type)			
Output function	Complementary			–
Switching mode	Light/dark-switching;/Light switching/Dark-switching (depending on type)			
Output current $I_{max.}$	≤ 100 mA			
Response time [4]	< 0.5 ms	≤ 1.25 ms		≤ 1.4 ms
Switching frequency [5]	1,000 Hz	400 Hz		350 Hz
Connection type	Male connector/Cable, 2 m [6] (depending on type)			
Circuit protection	A [7], B [8], D [9]			
Protection class [10]	II			
Weight	10 g / 20 g (depending on type)			20 g / 40 g (depending on type)
Polarisation filter	–		✔	–
Housing material	ABS			
Optics material	PMMA			

	WTB15	WTE15	WL15	WSE15
Enclosure rating	IP 66, IP 67	IP 67		
Items supplied	Snap-ring and M18 nut			
Ambient operating temperature	–40 °C ... +60 °C	–25 °C ... +55 °C		
Ambient storage temperature	–40 °C ... +75 °C	–25 °C ... +70 °C		

[1] Limit values, operation in short-circuit protected network max. 8 A.
[2] May not exceed or fall short of V_S tolerances.
[3] Without load.
[4] Signal transit time with resistive load.
[5] With light/dark ratio 1:1.
[6] Do not bend below 0 °C.
[7] A = V_S connections reverse-polarity protected.
[8] B = inputs and output reverse-polarity protected.
[9] D = outputs overcurrent and short-circuit protected.
[10] Reference voltage: 50 V DC.

Ordering information

Other models available at www.mysick.com/en/W15

WTB15

- **Sensor principle:** photoelectric proximity sensor
- **Detection principle:** background suppression
- **Adjustment:** potentiometer, 5 turns

Sensing range max. [1]	Output type	Switching mode	Connection	Connection diagram	Model name	Part no.
4 mm ... 200 mm	PNP	Light/dark-switching	Connector M12, 4-pin	Cd-083	WTB15-P2431	1044305
			Cable, 4-wire 2 m PUR	Cd-094	WTB15-P1131	1046284
	NPN	Light/dark-switching	Connector M12, 4-pin	Cd-083	WTB15-N2431	1044306
			Cable, 4-wire 2 m PUR	Cd-094	WTB15-N1131	1046283
	PNP, NPN	Light switching,	Connector M12, 4-pin	Cd-086	WTB15-B2431	1043326
			Cable, 4-wire 2 m PUR	Cd-096	WTB15-B1131	1046282
		Dark-switching	Connector M12, 4-pin	Cd-086	WTB15-A2431	1043325
			Cable, 4-wire 2 m PUR	Cd-096	WTB15-A1131	1046281

[1] Object with 90 % reflectance (referred to standard white, DIN 5033)

WTE15

- **Sensor principle:** photoelectric proximity sensor
- **Detection principle:** energetic
- **Adjustment:** potentiometer, 5 turns

Sensing range max. [1]	Output type	Switching mode	Connection	Connection diagram	Model name	Part no.
10 mm ... 350 mm	PNP	Light/dark-switching	Connector M12, 4-pin	Cd-083	WTE15-P2411	1043314
			Cable, 4-wire 2 m PUR	Cd-094	WTE15-P1111	1046148
	NPN	Light/dark-switching	Connector M12, 4-pin	Cd-083	WTE15-N2411	1043313
			Cable, 4-wire 2 m PUR	Cd-094	WTE15-N1111	1046147
	PNP, NPN	Light switching,	Connector M12, 4-pin	Cd-086	WTE15-B2411	1043317
			Cable, 4-wire 2 m PUR	Cd-096	WTE15-B1111	1046278
		Dark-switching	Connector M12, 4-pin	Cd-086	WTE15-A2411	1043316
			Cable, 4-wire 2 m PUR	Cd-096	WTE15-A1111	1046277

[1] Object with 90 % reflectance (referred to standard white, DIN 5033)

WL15

- **Sensor principle:** photoelectric retro-reflective sensor
- **Detection principle:** standard optics

Sensing range max. [1]	Output type	Switching mode	Time functions	Connection	Connection diagram	Model name	Part no.
0.035 m ... 5 m	PNP	Light/dark-switching	–	Connector M12, 4-pin	Cd-083	WL15-P2430	1043321
				Cable, 4-wire 2 m PUR	Cd-094	WL15-P1130	1044303
			Time delay off [2]	Connector M12, 4-pin	Cd-083	WL15-F2433	1043319
				Cable, 4-wire 2 m PUR	Cd-094	WL15-F1133	1046150
	NPN	Light/dark-switching	–	Connector M12, 4-pin	Cd-083	WL15-N2430	1043320
				Cable, 4-wire 2 m PUR	Cd-094	WL15-N1130	1044304
			Time delay off [2]	Connector M12, 4-pin	Cd-083	WL15-E2433	1043318
				Cable, 4-wire 2 m PUR	Cd-094	WL15-E1133	1046149
	PNP, NPN	Light switching, Light switching,	–	Connector M12, 4-pin	Cd-086	WL15-B2430	1043324
				Cable, 4-wire 2 m PUR	Cd-096	WL15-B1130	1046280
		Dark-switching-Dark-switching	–	Connector M12, 4-pin	Cd-086	WL15-A2430	1043323
				Cable, 4-wire 2 m PUR	Cd-096	WL15-A1130	1046279

[1] PL80A.
[2] Adjustable via time control.

WL15, detecting objects wrapped in film

- **Sensor principle:** photoelectric retro-reflective sensor
- **Detection principle:** standard optics

Sensing range max. [1]	Output type	Switching mode	Connection	Connection diagram	Model name	Part no.
0.035 m ... 5 m	PNP	Light/dark-switching	Connector M12, 4-pin	Cd-083	WL15-P2430S01	1054623

[1] PL80A.

WSE15

- **Sensor principle:** through-beam photoelectric sensor

Sensing range max.	Output type	Switching mode	Connection	Connection diagram	Model name	Part no.
0 m ... 5 m	PNP, NPN	Light switching, Light switching,	Connector M12, 4-pin	Cd-215	WSE15-B2430	1043328
			Cable, 4-wire 2 m PUR	Cd-218	WSE15-B1130	1046286
		Dark-switching Dark-switching	Connector M12, 4-pin	Cd-215	WSE15-A2430	1043327
			Cable, 4-wire 2 m PUR	Cd-218	WSE15-A1130	1046285

Dimensional drawings

Dimensions in mm (inch)

WTE15, WTB15

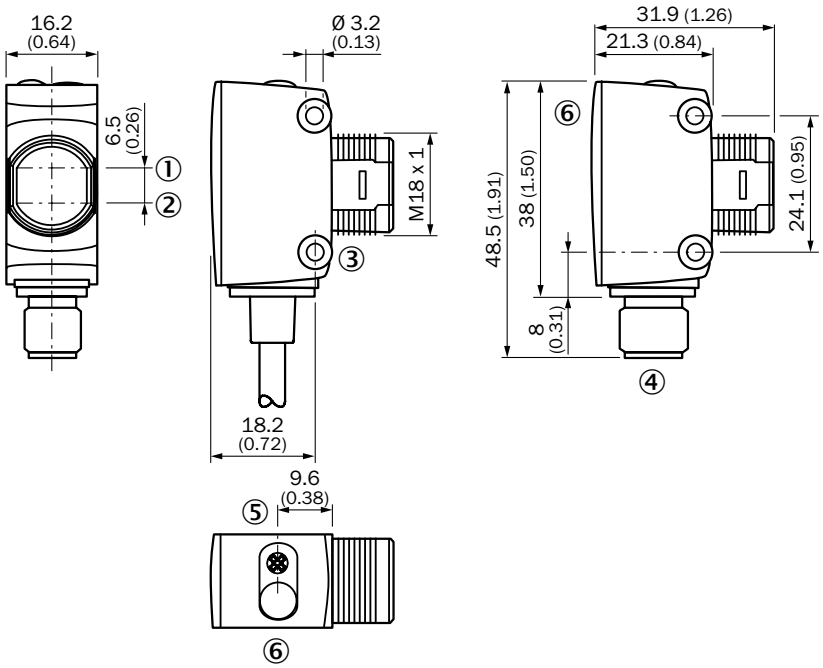

① Optical axis receiver
② Optical axis sender
③ Mounting hole, Ø 3.2 mm
④ Connector M12, 4-pin
⑤ Potentiometer
⑥ LED indicator green: power; yellow: output

WL15, WSE15, without time functions

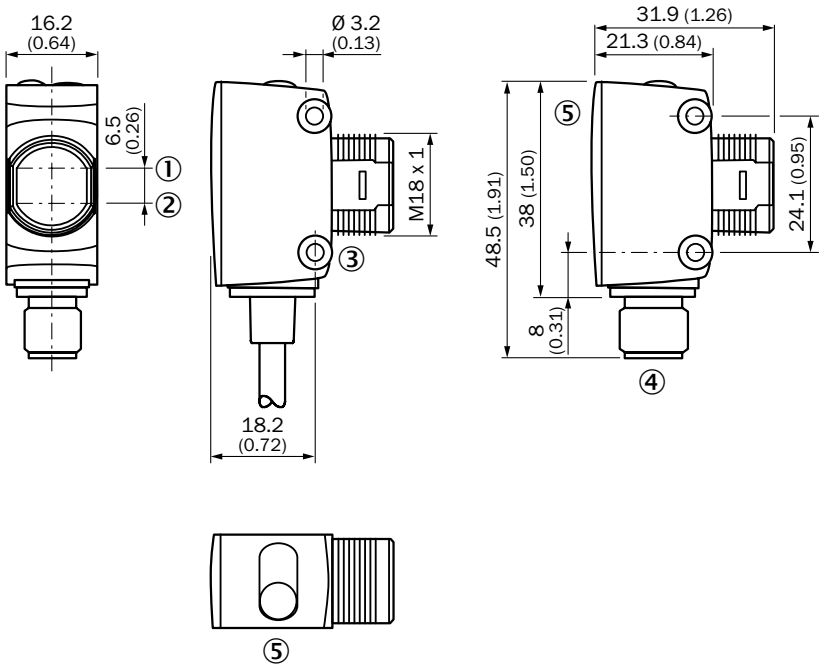

① Optical axis, receiver
② Optical axis, sender
③ Mounting hole, Ø 3.2 mm
④ Connector M12, 4-pin
⑤ LED indicator green: power; yellow: output

WL15, WSE15, with time functions

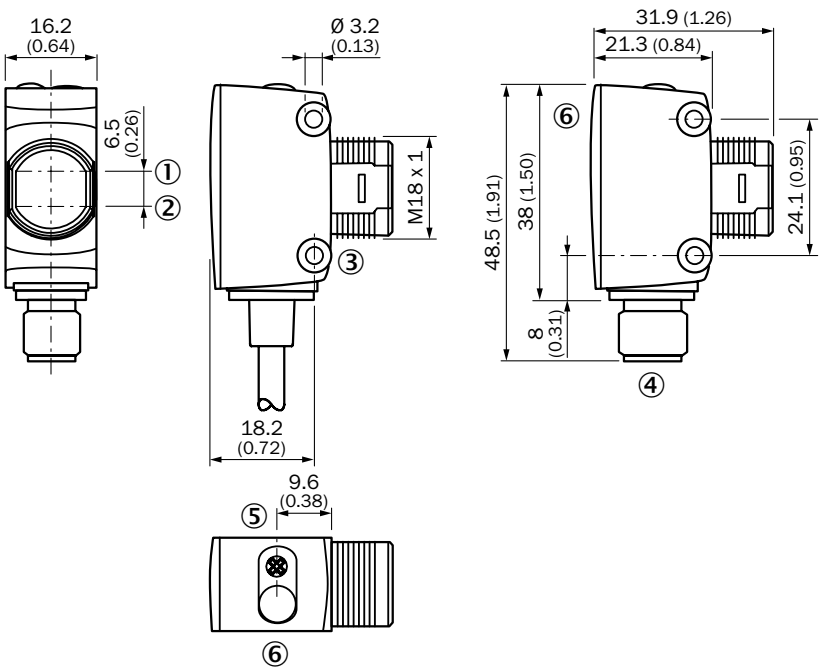

① Optical axis receiver
② Optical axis sender
③ Mounting hole, Ø 3.2 mm
④ Connector M12, 4-pin
⑤ Time control
⑥ LED indicator green: power; yellow: output

Characteristic curves

Black-white shift

WTB15

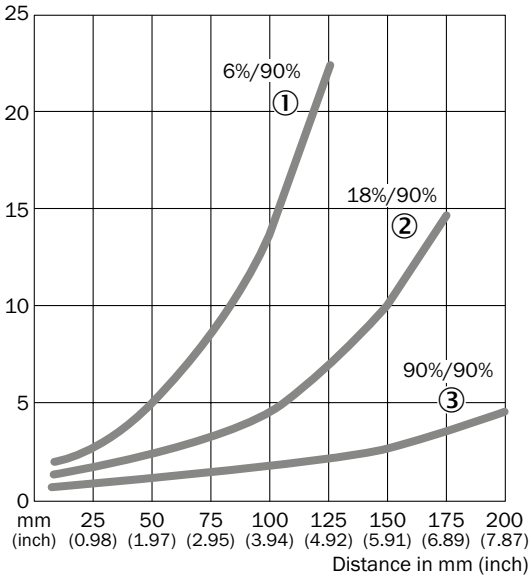

① Sensing range on black, 6 % remission
② Sensing range on gray, 18 % remission
③ Sensing range on white, 90 % remission

WTE15

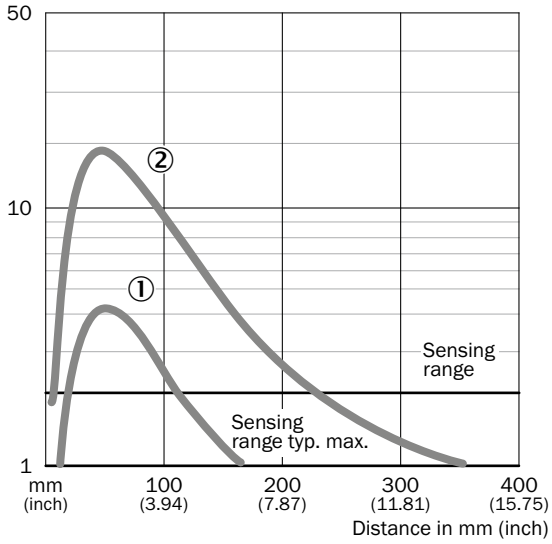

① Sensing range on gray, 18 % remission
② Sensing range on white, 90 % remission

Operating reserve

WL15

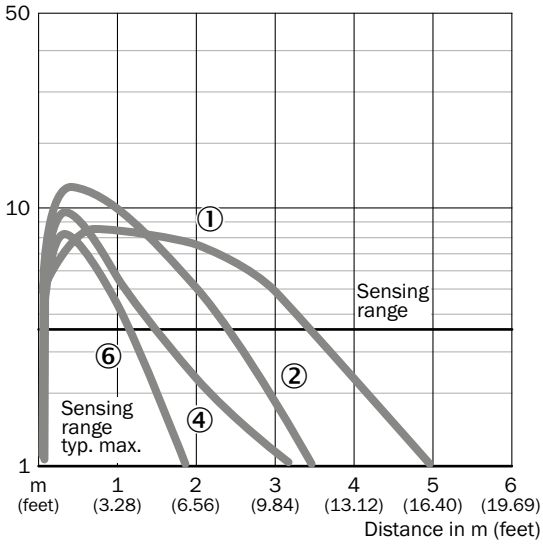

① PL80A
② P250
③ C110A
④ PL50A, PL40A
⑤ PL30A, PL31A
⑥ PL20A
⑦ Reflective tape REF-Plus

WSE15

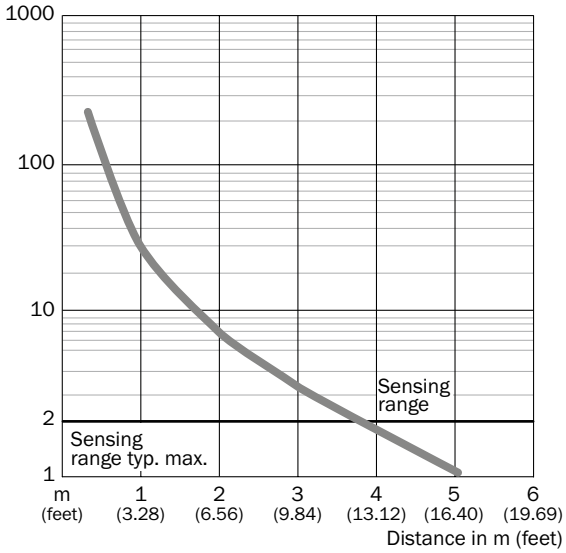

Bar diagrams

WTB15

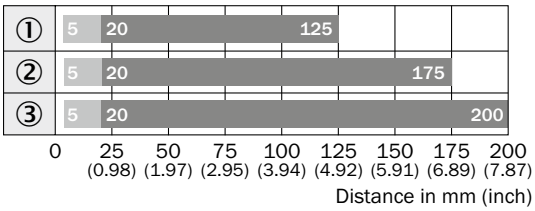

Sensing range Sensing range max.

① Sensing range on black, 6 % remission
② Sensing range on gray, 18 % remission
③ Sensing range on white, 90 % remission

WTE15

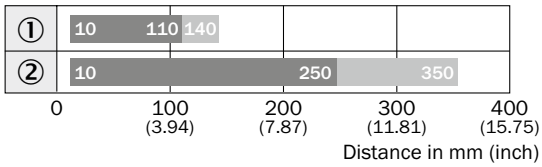

Sensing range Sensing range max.

① Sensing range on gray, 18 % remission
② Sensing range on white, 90 % remission

WL15

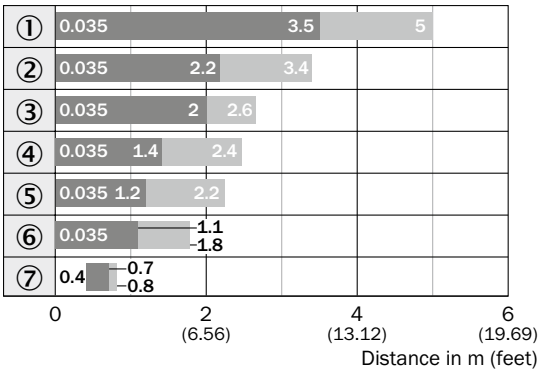

Sensing range Sensing range max.

① PL80A
② P250
③ C110A
④ PL50A, PL40A
⑤ PL30A, PL31A
⑥ PL20A
⑦ Reflective tape REF-Plus

WSE15

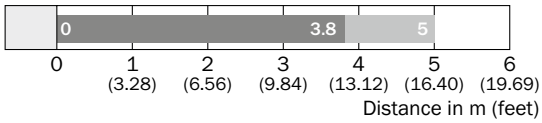

Sensing range Sensing range typ. max.

Connection diagram

Cd-083

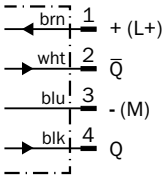

Cd-086

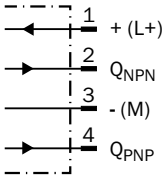

Cd-094

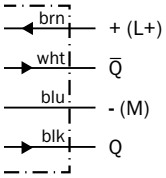

Cd-096

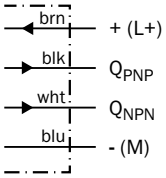

Cd-215

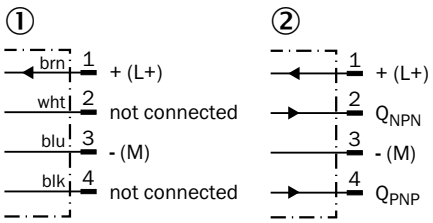

① Sender
② Receiver

Cd-218

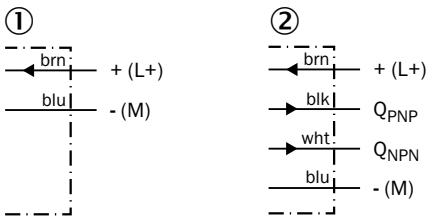

① Sender
② Receiver

Recommended accessories

Mounting brackets/plates

Mounting brackets

Figure	Material	Description	Model name	Part no.
	Steel, zinc coated	Mounting plate for M18 sensors	BEF-WG-M18	5321870
		Mounting bracket, M18 thread	BEF-WN-M18	5308446

Plug connectors and cables

Connecting cable (female connector-open)

- **Cable material:** PVC
- **Connector material:** TPU

Figure	Connection type head A	Connection type head B	Connecting cable	Enclosure rating	Model name	Part no.
	Female connector, M12, 4-pin, straight	Cable, open conductor heads	2 m, 4-wire	IP 67	DOL-1204-G02M	6009382
			5 m, 4-wire	IP 67	DOL-1204-G05M	6009866
	Female connector, M12, 4-pin, angled	Cable, open conductor heads	2 m, 4-wire	IP 67	DOL-1204-W02M	6009383
			5 m, 4-wire	IP 67	DOL-1204-W05M	6009867

Universal bar clamp systems

Figure	Material	Description	Model name	Part no.
	Zinc plated steel (sheet), Diecast zinc (clamp)	Plate N06 for universal clamp bracket	BEF-KHS-N06	2051612

Reflectors

Angular

Figure	Material	Description	Model name	Part no.
	PMMA/ABS	Rectangular, screw connection, 47 mm x 47 mm	P250	5304812
		Rectangular, screw connection, 38 mm x 15 mm	PL20A	1012719
		Rectangular, screw connection, 56 mm x 28 mm	PL30A	1002314
		Rectangular, screw connection, 37 mm x 56 mm	PL40A	1012720
		Rectangular, screw connection, 80 mm x 80 mm	PL80A	1003865

Reflective tape

Figure	Description	Model name	Part no.
	Self-adhesive, 50 mm x 60 mm	REF-IRF-56	5314244

Round

Figure	Material	Description	Model name	Part no.
	PMMA/ABS	Round, screw connection	C110A	5304549

→ **For additional accessories, please see page L-861**

Flexible, low-cost presence detection solutions with clear housings

Product description

The Z photoelectric sensor is a low-cost sensor for standard applications in conveyor lines, packaging machines, bin controls and hands-free systems. The sensor's transparent housing provides 360° status indication and has a straight cable outlet for easy connection. The Z1 and Z2 are offered in many different sensing ranges and are available in three variants: retro-reflective, background suppression and energetic. The eyeball-shaped housing of the Z3 allows for infinite adjustability and the indicator LED to be seen from 360° around the device.

At a glance

- Economical design with background suppression, retro-reflective or energetic variants available; non-adjustable
- Compact, transparent housing with 360° status indication
- M18 front mount and 24-25.4 mm slotted side through holes compatible with competitor devices
- Spherical eyeball-style housing with 24 mm ball mount allows for infinite adjustability (depending on type)
- Connection system: straight or angled cable outlet (60°) or M12 or M8 connector outlet
- IP 67 enclosure rating for harsh environments

Your benefits

- High performance at a low cost
- Clear housing provides highly visible 360° of status indication, which simplifies troubleshooting
- Simple and unique mounting options lower installation costs
- Small size fits applications with limited space
- Customization options reduce material and labor costs
- Compatibility with competitor products for easy integration into existing systems

Class 2
LISTED 87LL

Additional information

→ **www.mysick.com/en/Z-Sensor**
For more information, just enter the link or scan the QR code and get direct access to technical data, CAD design models, operating instructions, software, application examples and much more.

Detailed technical data

Features

	ZT1	ZT2	ZL1	ZL2	ZL3
Sensor principle	Photoelectric proximity sensor		Photoelectric retro-reflective sensor		
Detection principle	Background suppression / energetic (depending on type)		Standard optics		
Dimensions (W x H x D)	13.6 mm x 41.9 mm x 31.7 mm 13.6 mm x 45.2 mm x 31.7 mm 13.6 mm x 34.8 mm x 21.9 mm (depending on type)				
Housing design (light emission)	Hybrid				
Thread diameter (housing)	M18 x 1				–
Sensing range max.	0 mm ... 155 mm [1] (depending on type)		0.1 m ... 4.8 m [2]		
Sensing range	0 mm ... 155 mm (depending on type)		0.1 m ... 3 m [2]		
Type of light	Infrared light		Visible red light		
Light source [3]	LED				
Wave length	880 nm		660 nm		

[1] Object with 90 % reflectance (referred to standard white, DIN 5033)
[2] PL80A.
[3] Average service life of 100,000 h at T_A = +25 °C.

Mechanics/electronics

	ZT1	ZT2	ZL1	ZL2	ZL3
Supply voltage [1]	10 V DC ... 30 V DC				
Ripple [2]	< 5 V_{pp}				
Power consumption [3]	< 20 mA				
Output type	PNP/NPN (depending on type)		PNP	PNP/NPN (depending on type)	
Switching mode	Light switching / Dark-switching (depending on type)				
Output current $I_{max.}$	50 mA				
Switching frequency [4]	200 Hz		400 Hz		
Connection type	Cable with connector, M8, 150 mm [5] Cable with connector, M12, 150 mm [5] Cable, 2 m [5] (depending on type)				
Circuit protection	A [6], D [7]				
Protection class [8]	III				
Polarisation filter	–		✔		
Housing material	Glass fiber reinforced ABS plastic				
Enclosure rating	IP 67				
Items supplied	Mounting nut M18				–
Ambient operating temperature	–25 °C ... +50 °C				
Ambient storage temperature	–40 °C ... +70 °C				

[1] Limit values.
[2] May not exceed or fall short of V_S tolerances.
[3] Without load.
[4] With light/dark ratio 1:1.
[5] Do not bend below 0 °C.
[6] A = V_S connections reverse-polarity protected.
[7] D = outputs overcurrent and short-circuit protected.
[8] Reference voltage: 50 V DC.

Ordering information

Other models available at www.mysick.com/en/Z-Sensor

ZT1

- **Sensor principle:** photoelectric proximity sensor
- **Type of light:** infrared light
- **Switching mode:** light switching

Detection principle	Sensing range max. [1]	Light spot size (distance)	Output type	Connection	Connection diagram	Model name	Part no.
Background suppression	0 mm ... 50 mm	10.5 mm (50 mm)	PNP	Cable with connector M8, 4-pin 150 mm	Cd-067	ZT1-P3231	1045595
				Cable with connector M12, 4-pin 150 mm	Cd-067	ZT1-P3221	1045579
				Cable, 3-wire 2 m PVC	Cd-043	ZT1-P3215	1045563
			NPN	Cable, 3-wire 2 m PVC	Cd-043	ZT1-N3215	1045562
Energetic	1 mm ... 100 mm	20 mm (100 mm)	PNP	Cable with connector M12, 4-pin 150 mm	Cd-067	ZT1-P4221	1045583
				Cable, 3-wire 2 m PVC	Cd-043	ZT1-P4215	1045567
	5 mm ... 155 mm	31 mm (100 mm)	PNP	Cable with connector M8, 4-pin 150 mm	Cd-067	ZT1-P5231	1045591
				Cable with connector M12, 4-pin 150 mm	Cd-067	ZT1-P5221	1045575
				Cable, 3-wire 2 m PVC	Cd-043	ZT1-P5215	1045559

[1] Object with 90 % reflectance (referred to standard white, DIN 5033).

ZT2

- **Sensor principle:** photoelectric proximity sensor
- **Type of light:** infrared light
- **Switching mode:** light switching

Detection principle	Sensing range max. [1]	Light spot size (distance)	Output type	Connection	Connection diagram	Model name	Part no.
Background suppression	0 mm ... 50 mm	10.5 mm (50 mm)	PNP	Connector M8, 4-pin	Cd-067	ZT2-P3238	1045489
				Connector M12, 4-pin	Cd-067	ZT2-P3228	1045473
				Cable, 3-wire 2 m PVC	Cd-043	ZT2-P3215	1045408
			NPN	Cable, 3-wire 2 m PVC	Cd-043	ZT2-N3215	1045407
Energetic	1 mm ... 100 mm	20 mm (100 mm)	PNP	Connector M8, 4-pin	Cd-067	ZT2-P4238	1045493
				Connector M12, 4-pin	Cd-067	ZT2-P4228	1045477
	5 mm ... 155 mm	31 mm (100 mm)	PNP	Connector M8, 4-pin	Cd-067	ZT2-P5238	1045485
				Connector M12, 4-pin	Cd-067	ZT2-P5228	1045469

[1] Object with 90 % reflectance (referred to standard white, DIN 5033).

ZL1

- **Sensor principle:** photoelectric retro-reflective sensor
- **Detection principle:** standard optics
- **Type of light:** visible red light

Sensing range max. [1]	Light spot size (distance)	Output type	Switching mode	Connection	Connection diagram	Model name	Part no.
0.1 m ... 4.8 m	125 mm (1 m)	PNP	Light switching	Cable with connector M8, 4-pin 150 mm	Cd-067	ZL1-P2431	1045505
				Cable with connector M12, 4-pin 150 mm	Cd-067	ZL1-P2421	1045501
				Cable, 3-wire 2 m PVC	Cd-043	ZL1-P2415	1045497
			Dark-switching	Cable with connector M8, 4-pin 150 mm	Cd-067	ZL1-F2431	1045506
				Cable with connector M12, 4-pin 150 mm	Cd-067	ZL1-F2421	1045502
				Cable, 3-wire 2 m PVC	Cd-043	ZL1-F2415	1045498

[1] PL80A.

ZL2

- **Sensor principle:** photoelectric retro-reflective sensor
- **Detection principle:** standard optics
- **Type of light:** visible red light

Sensing range max. [1]	Light spot size (distance)	Output type	Switching mode	Connection	Connection diagram	Model name	Part no.
0.1 m ... 4.8 m	125 mm (1 m)	PNP	Dark-switching	Cable, 3-wire 2 m PVC	Cd-043	ZL2-F2415	1045389
				Connector M8, 4-pin	Cd-067	ZL2-F2438	1045385
				Connector M12, 4-pin	Cd-067	ZL2-F2428	1045371
		NPN	Dark-switching	Cable, 3-wire 2 m PVC	Cd-043	ZL2-E2415	1045390
				Connector M12, 4-pin	Cd-067	ZL2-E2428	1045372

[1] PL80A.

ZL3

- **Sensor principle:** photoelectric retro-reflective sensor
- **Detection principle:** standard optics
- **Type of light:** visible red light

Sensing range max. [1]	Light spot size (distance)	Output type	Switching mode	Connection	Connection diagram	Model name	Part no.
0.1 m ... 4.8 m	125 mm (1 m)	PNP	Dark-switching	Cable with connector M8, 4-pin 150 mm	Cd-067	ZL3-F2431	1045539
				Cable with connector M12, 4-pin 150 mm	Cd-067	ZL3-F2421	1045535
				Cable, 3-wire 2 m PVC	Cd-043	ZL3-F2415	1045531
			Light switching	Cable, 3-wire 2 m PVC	Cd-043	ZL3-P2415	1045530
		NPN	Dark-switching	Cable with connector M8, 4-pin 150 mm	Cd-067	ZL3-E2431	1045540
				Cable with connector M12, 4-pin 150 mm	Cd-067	ZL3-E2421	1045536

[1] PL80A.

Dimensional drawings

Dimensions in mm (inch)

ZT1, ZL1

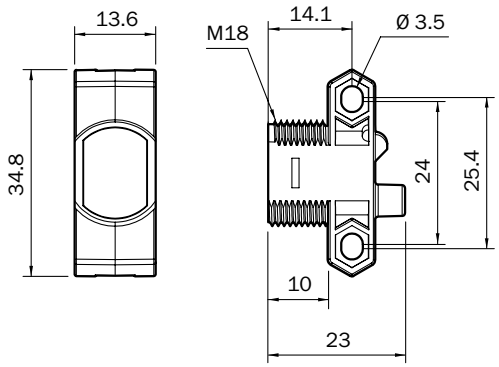

ZT2, ZL2, Connector M8, 4-pin

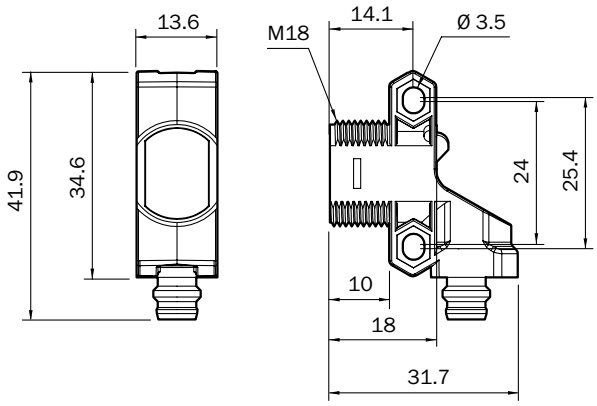

ZT2, ZL2, Connector M12, 4-pin

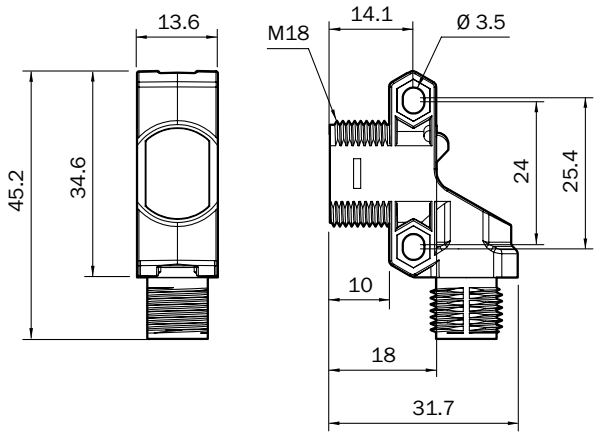

ZT2, ZL2, cable

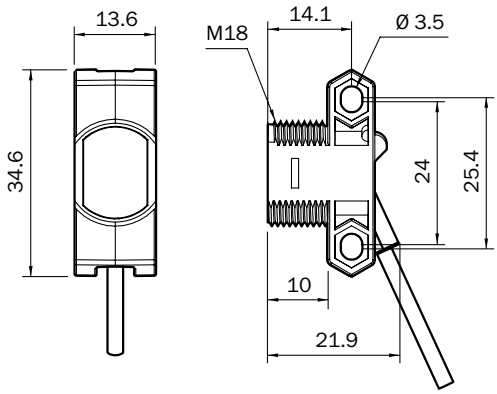

ZL3

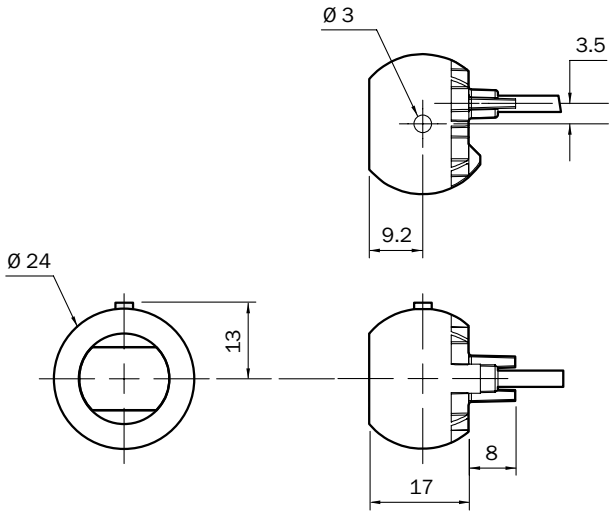

Characteristic curves

Operating reserve

ZL1, ZL2, ZL3

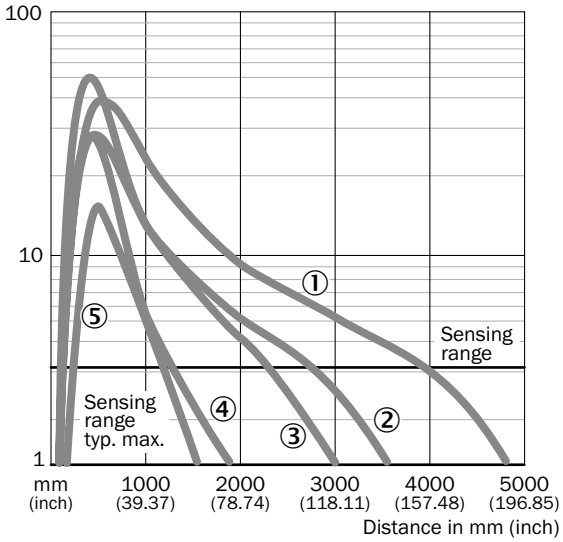

① PL80A
② P250
③ PL40A
④ PL20A
⑤ Reflective tape REF-Plus

Bar diagrams

ZT1, 50 mm

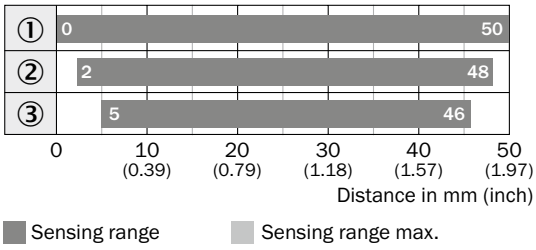

① Sensing range on white, 90 % remission
② Sensing range on gray, 18 % remission
③ Sensing range on black, 6 % remission

ZT1, 100 mm

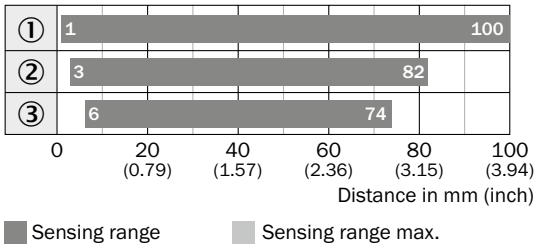

① Sensing range on white, 90 % remission
② Sensing range on gray, 18 % remission
③ Sensing range on black, 6 % remission

ZT1, 155 mm

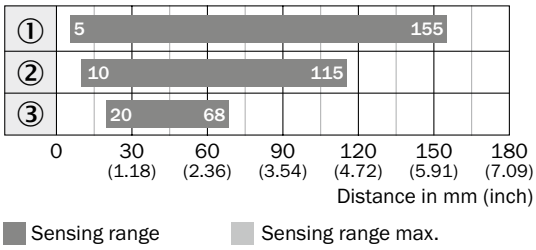

① Sensing range on white, 90 % remission
② Sensing range on gray, 18 % remission
③ Sensing range on black, 6 % remission

ZL1, ZL2, ZL3

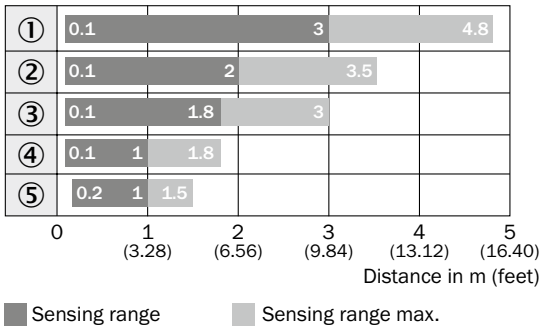

① PL80A
② P250
③ PL40A
④ PL20A
⑤ Reflective tape REF-Plus

Connection diagram

Cd-043

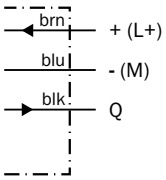

Cd-067

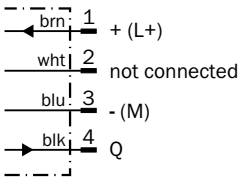

Recommended accessories

Mounting brackets/plates

Mounting brackets

Figure	Material	Description	Model name	Part no.
	Steel, zinc coated	Mounting plate for M18 sensors	BEF-WG-M18	5321870
		Mounting bracket, M18 thread	BEF-WN-M18	5308446

Plug connectors and cables

Connecting cable (female connector-open)

- **Cable material:** PVC

Figure	Connection type head A	Connection type head B	Connecting cable	Connector material	Enclosure rating	Model name	Part no.
	Female connector, M8, 4-pin, straight	Cable, open conductor heads	2 m, 4-wire	PVC	IP 67, IP 69K	DOL-0804-G02M	6009870
			5 m, 4-wire	PVC	IP 67, IP 69K	DOL-0804-G05M	6009872
	Female connector, M12, 4-pin, straight	Cable, open conductor heads	2 m, 4-wire	TPU	IP 67	DOL-1204-G02M	6009382
			5 m, 4-wire	TPU	IP 67	DOL-1204-G05M	6009866

Female connector (ready to assemble)

Figure	Connection type head A	Connection type head B	Connector material	Enclosure rating	Model name	Part no.
	Female connector, M8, 3-pin, straight	Screw-type terminals	PBT	IP 67	DOS-0803-G	7902077
	Female connector, M8, 3-pin, angled	Pin penetration	PBT	IP 67	DOS-0803-W	7902078

Universal bar clamp systems

Figure	Material	Description	Model name	Part no.
	Zinc plated steel (sheet), Diecast zinc (clamp)	Plate N06 for universal clamp bracket	BEF-KHS-N06	2051612

Reflectors

Angular

Figure	Material	Description	Model name	Part no.
	PMMA/ABS	Rectangular, screw connection, 47 mm x 47 mm	P250	5304812
		Rectangular, screw connection, 38 mm x 15 mm	PL20A	1012719
		Rectangular, screw connection, 56 mm x 28 mm	PL30A	1002314
		Rectangular, screw connection, 37 mm x 56 mm	PL40A	1012720
		Rectangular, screw connection, 80 mm x 80 mm	PL80A	1003865

Reflective tape

Figure	Description	Model name	Part no.
	Self-adhesive, 50 mm x 60 mm	REF-IRF-56	5314244

Round

Figure	Material	Description	Model name	Part no.
	PMMA/ABS	Round, screw connection	C110A	5304549

→ **For additional accessories, please see page L-861**

Fits flexibly into the narrowest corners

When installation space is extremely limited or the objects to be detected are tiny, fiber-optic sensors are the ideal solution. If it is necessary for even higher requirements to be fulfilled, such as sensing range, temperature resistance, material durability or a flexible mounting process, the intelligent combination of sensors and fiber-optic cables can provide the perfect solution. A wide range of fiber-optic cables with application-specific optical heads ensure that every need is met.

Your benefits

- Reliable and accurate detection of the smallest objects thanks to innovative, microcontroller-supported electronics
- Immune to EMC, high temperatures or chemicals, as the electronic evaluation system is fitted separately from the fiber-optic cable head
- Space-saving mounting even in confined spaces
- Multiple setting options permit solutions for practically any application
- Light weight, suitable for use on a robot arm
- Universal application possibilities due to diversity of fiber-optic cables

8015327/2014-02-08
Subject to change without notice

Fiber-optic sensors and fibers

J

The versatile WLL170-2

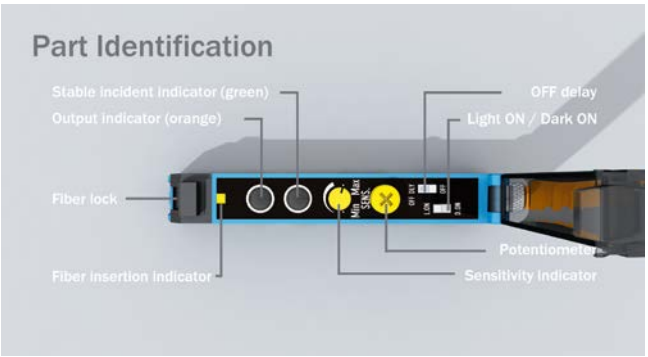

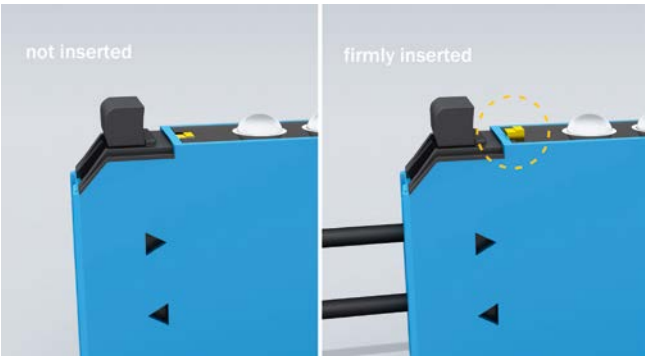

Easy to operate fiber-optic sensor. Simple adjustment via potentiometer or teach-in button.

The devices are optimized for the individual applications:

- Standard applications
- High speed applications (50 µs)
- Easy contrast detection with green LED emitter

The high-performance WLL180T

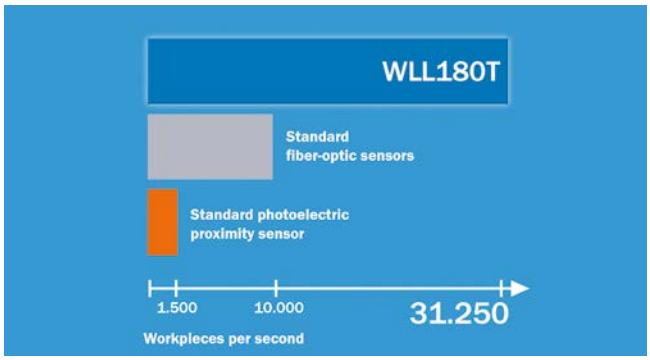

The world's fastest fiber-optic sensor in its class with a 16 µs response time. It reliably detects up to 31,250 workpieces per second.

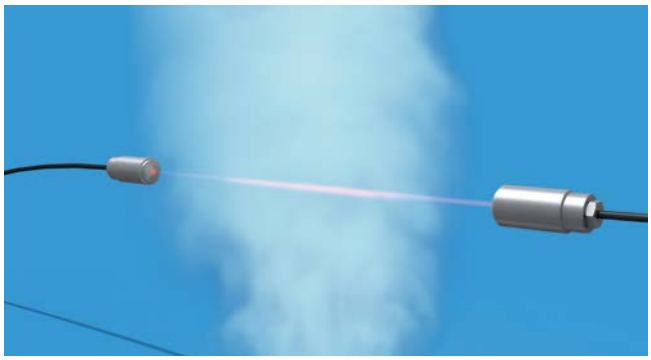

Even sensing ranges of up to 20 m can be achieved with the WLL180T and the corresponding fiber. The powerful light beam penetrates particles in the air. Workpieces are detected even under difficult conditions, such as dust, mist or spray.

The plug/socket design means installation on a mounting rail is extremely easy

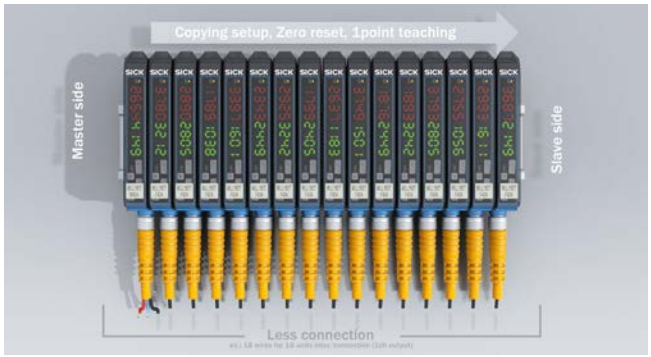

The copy function simplifies commissioning. All settings are copied to the other bus devices at the touch of a button.

- Easy reading guaranteed: The 7-segment display can be turned upside down in difficult installation conditions
- Up to 16 devices can be synchronized in bus mode. This prevents mutual interference (anti-interference) in the case of closely mounted fiber-optic heads.

- All connected WLL180T sensors can be individually set on the device or via the relevant teach-in cable. If all devices should be taught-in simultaneously, this can be done via bus coupling with a single teach-in cable.
- ASC for maintenance-free operation: If, for example, the light intensity is reduced by dust, this is detected and the switching threshold compensates accordingly. The switching threshold is automatically recalibrated after the optics are cleaned.
- Adjustable hysteresis: The hysteresis can be adjusted from 1 % to 40 %. This enables flexible settings for detection of complex objects.
- Anti-blooming function to prevent overload.

Product family overview

WLL170-2

Versatility for standard applications

Technical data overview	
Housing material	Plastic
Type of light	Visible red light / Green light
Enclosure rating	IP 66
Response time	≤ 0.25 ms, ≤ 50 µs
Switching mode	Light/dark-switching
Indication	LED

At a glance

- Rapid response time (50 µs)
- Switching threshold adjustment via potentiometer, or teach-in via button or cable
- Four different teach-in modes
- Simple installation
- Red or green LED emitter

Detailed information ➜ J-790

J

		
	WLL180T	**LL3**
	High-performance fiber-optic sensor with world's fastest response time	A wide variety of solutions to your most challenging applications: SICK's fiber-optic cables
	Plastic	–
	Visible red light / Infrared light	–
	IP 50	–
	≤ 2 ms, ≤ 8 ms, ≤ 16 µs, ≤ 70 µs, ≤ 250 µs	–
	Light/dark-switching	–
	Display	–
	• Selectable response time up to 16 µs • Sensing range up to 20 m (Through-beam system); up to 1400 mm (proximity system) • Bus-compatible with anti-interference • 2 x 4-digit display • Adjustable hysteresis • Rotatable display screen • High-resolution signal processing • Programmable time delays	• Very large selection of plastic and glass fiber-optic cables. • Fiber-optic cables resistant to chemicals and high temperature • Threaded and smooth sleeves, bands of light (array), 90° reflection versions available • Focused optics • Proximity and through-beam versions available • Plastic , protective metal or Teflon sheathing available
	➜ J-798	➜ J-804

J

Versatility for standard applications

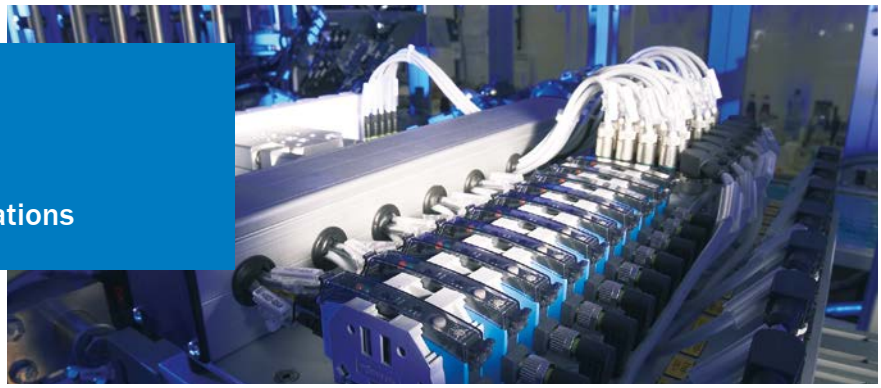

Product description

The WLL170-2 fiber-optic photoelectric sensor family features a standard operating system that is especially suitable for basic applications, but can be used when rapid response times are crucial. There are several variants. The WLL170(T) version is optimized for a number of key applications, such as detection of very small objects, colored marks, or transparent objects. The WLL170T-2 is a teach-in version where the switching threshold can be set either automatically by pressing a button or via a cable. In contrast, the WLL170-2 has a manual switching threshold adjustment via a potentiometer. Both models are available in a high-speed version with a switching frequency of 10 kHz for extremely fast response times. For optimum detection of color contrasts, you can choose between devices with a red or green LED emitter. Detection tasks are handled securely and reliably using the LL3 series of fiber-optic cables.

At a glance

- Rapid response time (50 µs)
- Switching threshold adjustment via potentiometer, or teach-in via button or cable
- Four different teach-in modes
- Simple installation
- Red or green LED emitter

Your benefits

- Reliable, rapid process detection
- Low installation costs due to short commissioning time
- Flexible teach-in modes allow the sensor to be customized according to the specific application
- Emitted light ideal for color or contrast detection
- Easy programming via simple potentiometer and switch adjustment

J

Additional information

→ **www.mysick.com/en/WLL170-2**

For more information, just enter the link or scan the QR code and get direct access to technical data, CAD design models, operating instructions, software, application examples and much more.

Detailed technical data

Features

	WLL170-2	WLL170T-2
Sensor principle	Fiber-optic photoelectric sensor	
Dimensions (W x H x D)	10.5 mm x 35.5 mm x 83.7 mm	
Housing design (light emission)	Rectangular	
Sensing range max.	0 mm ... 4,000 mm, through-beam system [1] (depending on type)	0 mm ... 3,500 mm, through-beam system [1] (depending on type)
Sensing range	0 mm ... 160 mm, proximity system [2] 0 mm ... 700 mm, through-beam system [3] (depending on type)	0 mm ... 160 mm, proximity system [2] 0 ... 700 mm, through-beam system [3] (depending on type)
Type of light	Visible red light/Green light (depending on type)	
Light source [4]	LED	
Wave length		
Visible red light	660 nm	
Green light	520 nm	525 nm
Teach-in	Potentiometer, 10-turn [5]	Teach-in-button, cable
Time type	Off-delayed	
Delay time	Selectable by sliding switch: ≤ 40 ms	
Indication	LED	

[1] LL3-TB02 and tip adapter LL3-TA01.
[2] Objects to be sensed with 90% reflectivity (based on DIN 5033 white standard). Sensing range depends on fiber-optic cable.
[3] LL3-tB01.
[4] Average service life of 100,000 h at T_A = +25 °C.
[5] Scale 270°.

Mechanics/electronics

	WLL170-2	WLL170T-2
Supply voltage [1]	10 V DC ... 30 V DC	
Ripple [2]	10 %	
Power consumption [3]	≤ 30 mA	
Output type	PNP, open collector/NPN, open collector (depending on type)	
Switching mode	Light/dark-switching (selectable via light/dark selector)	
Output current $I_{max.}$	≤ 100 mA	
Response time	≤ 0.25 ms [4] ≤ 50 µs [4] (depending on type)	
Switching frequency [5]		
Response time ≤ 0,25 ms [4]	2,000 Hz	
Response time ≤ 50 µs [4]	10,000 Hz	
Connection type	Cable, 2 m [6]/Male connector, M8 (depending on type)	
Circuit protection	A [7], B [8], C [9], D [10]	
Protection class	III	

J

	WLL170-2	WLL170T-2
Housing material	ABS/PC	ABS
Enclosure rating [11]	IP 66	
Ambient operating temperature	–25 °C ... +55 °C	
Ambient storage temperature	–40 °C ... +70 °C	

[1] Limit values.
[2] May not exceed or fall short of V_S tolerances.
[3] Without load.
[4] Signal transit time with resistive load.
[5] With light/dark ratio 1:1.
[6] Do not bend below 0 °C.
[7] A = V_S connections reverse-polarity protected.
[8] B = inputs and output reverse-polarity protected.
[9] C = interference suppression.
[10] D = outputs overcurrent and short-circuit protected.
[11] With correctly attached fibre-optic cable LL3 and closed protection hood.

Ordering information

Other models available at www.mysick.com/en/WLL170-2

WLL170-2

- **Adjustment:** Potentiometer, 10-turn (Scale 270°.)

Type of light	Response time	Sensing range max. [1]	Switching mode	Connection	Connection diagram	Model name	Part no.
Visible red light	≤ 0.25 ms	0 mm ... 4,000 mm, through-beam system	PNP	Cable, 3-wire, 2 m	Cd-043	WLL170-2P132	6029511
				Male connector, M8, 3-pin	Cd-045	WLL170-2P330	6029513
				Male connector, M8, 4-pin	Cd-066	WLL170-2P430	6029514
			NPN	Cable, 3-wire, 2 m	Cd-043	WLL170-2N132	6029515
				Male connector, M8, 3-pin	Cd-045	WLL170-2N330	6029517
				Male connector, M8, 4-pin	Cd-066	WLL170-2N430	6029518
Green light	≤ 0.25 ms	0 mm ... 1,700 mm, through-beam system	PNP	Cable, 3-wire, 2 m	Cd-043	WLL170-2P192	6029519
				Male connector, M8, 3-pin	Cd-045	WLL170-2P390	6029521
				Male connector, M8, 4-pin	Cd-066	WLL170-2P490	6029522
			NPN	Cable, 3-wire, 2 m	Cd-043	WLL170-2N192	6029523
				Male connector, M8, 3-pin	Cd-045	WLL170-2N390	6029525
				Male connector, M8, 4-pin	Cd-066	WLL170-2N490	6029526
Visible red light	≤ 50 µs	0 mm ... 1,600 mm, through-beam system	PNP	Cable, 3-wire, 2 m	Cd-043	WLL170-2P162	6029527
				Male connector, M8, 3-pin	Cd-045	WLL170-2P360	6029529
				Male connector, M8, 4-pin	Cd-066	WLL170-2P460	6029530
			NPN	Cable, 3-wire, 2 m	Cd-043	WLL170-2N162	6029531
				Male connector, M8, 3-pin	Cd-045	WLL170-2N360	6029533
				Male connector, M8, 4-pin	Cd-066	WLL170-2N460	6029534

[1] LL3-TB02 and tip adapter LL3-TA01.

WLL170T-2

Type of light	Response time	Sensing range max. [1]	Switching mode	Adjustment	Connection	Con-nection diagram	Model name	Part no.
Visible red light	≤ 0.25 ms	0 mm ... 3,500 mm, through-beam system	PNP	Teach-in button, Cable	Cable, 4-wire, 2 m	Cd-093	WLL170T-2P132	6033948
					Male connector, M8, 4-pin	Cd-092	WLL170T-2P430	6033950
				Teach-in button	Male connector, M8, 3-pin	Cd-045	WLL170T-2P330	6033949
			NPN	Teach-in button, Cable	Cable, 4-wire, 2 m	Cd-093	WLL170T-2N132	6033951
					Male connector, M8, 4-pin	Cd-092	WLL170T-2N430	6033953
				Teach-in button	Male connector, M8, 3-pin	Cd-045	WLL170T-2N330	6033952
Green light	≤ 0.25 ms	0 mm ... 1,600 mm, through-beam system	PNP	Teach-in button, Cable	Cable, 4-wire, 2 m	Cd-093	WLL170T-2P192	6033954
					Male connector, M8, 4-pin	Cd-092	WLL170T-2P490	6033956
				Teach-in button	Male connector, M8, 3-pin	Cd-045	WLL170T-2P390	6033955
			NPN	Teach-in button, Cable	Cable, 4-wire, 2 m	Cd-093	WLL170T-2N192	6033957
					Male connector, M8, 4-pin	Cd-092	WLL170T-2N490	6033959
				Teach-in button	Male connector, M8, 3-pin	Cd-045	WLL170T-2N390	6033958
Visible red light	≤ 50 µs	0 mm ... 1,500 mm, through-beam system	PNP	Teach-in button, Cable	Cable, 4-wire, 2 m	Cd-093	WLL170T-2P162	6033963
					Male connector, M8, 4-pin	Cd-092	WLL170T-2P460	6033965
				Teach-in button	Male connector, M8, 3-pin	Cd-045	WLL170T-2P360	6033964
			NPN	Teach-in button, Cable	Cable, 4-wire, 2 m	Cd-093	WLL170T-2N162	6033960
					Male connector, M8, 4-pin	Cd-092	WLL170T-2N460	6033962
				Teach-in button	Male connector, M8, 3-pin	Cd-045	WLL170T-2N360	6033961

[1] LL3-TB02 and tip adapter LL3-TA01.

Dimensional drawings

Dimensions in mm (inch)

WLL170-2

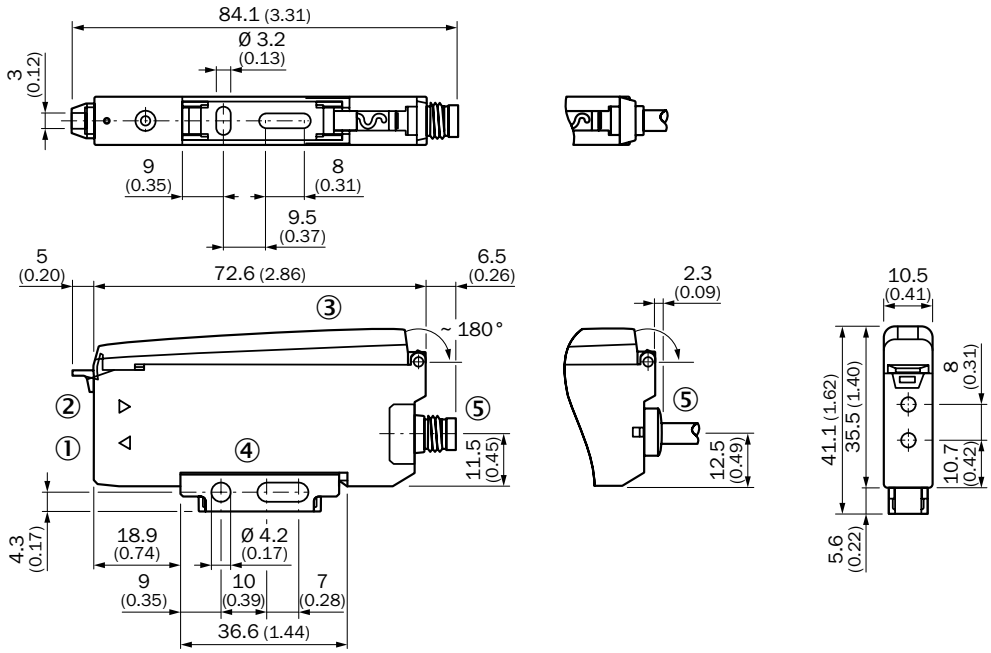

① Sender LED, installation of LL3 fibre-optic cable (sender fibre)
② Receiver, installation of LL3 fibre optic cable (receiver fibre)
③ Protective hood, can be raised at both ends
④ Mounting bracket, included
⑤ Connection

J

WLL170T-2

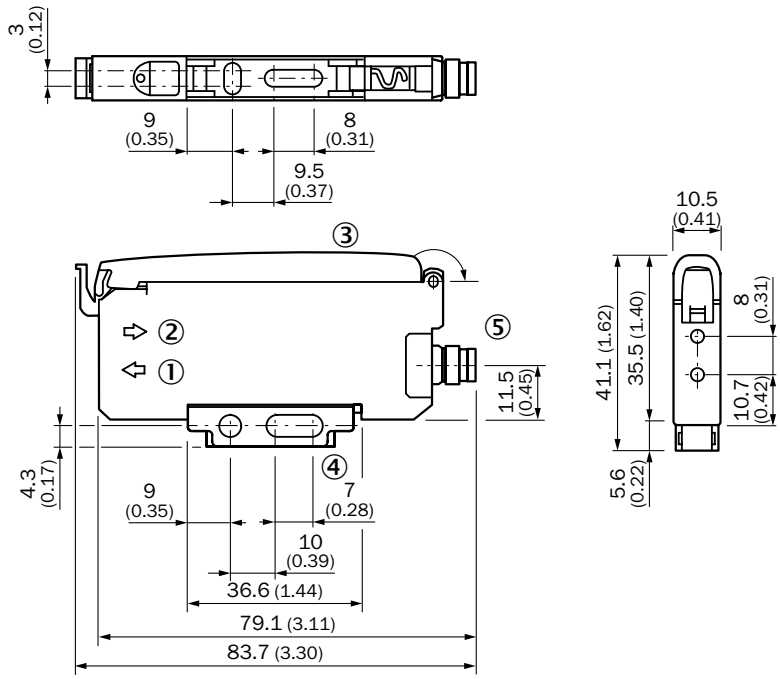

① Sender LED, installation of LL3 fibre-optic cable (sender fibre)
② Receiver, installation of LL3 fibre optic cable (receiver fibre)
③ Protective hood, can be raised at both ends
④ Mounting bracket, included
⑤ Connection

Adjustments

WLL170-2

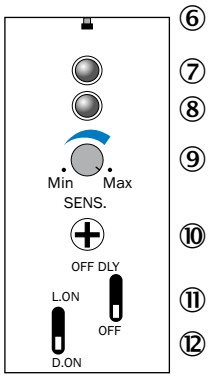

⑥ Indication of correct fibre-optic cable mounting
⑦ LED indicator orange, lights up when switching output is active
⑧ LED signal strength indicator green, lights up, when light received< 0.9 or >1.1 (switching threshold = 1)
⑨ Sensitivity scale 270°
⑩ Sensitivity control (10 revolutions)
⑪ L.ON/ d.ON selection switch. “OFF DLY” (on) / “OFF”, 40 ms fixed
⑫ Selector switch: “L.ON” (light-switching) /“D.ON” (dark-switching)

WLL170T-2

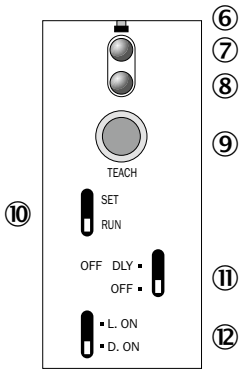

⑥ Indication of correct fibre-optic cable mounting
⑦ LED indicator orange: switching output active
⑧ LED signal strength indicator green, lights up, when light received< 0.9 or >1.1 (switching threshold = 1)
⑨ Teach-in button
⑩ Operating mode selector switch: “SET” (Teach-in mode) /“RUN” (sensor mode)
⑪ L.ON/ d.ON selection switch. “OFF DLY” (on) / “OFF”, 40 ms fixed
⑫ Selector switch: “L.ON” (light-switching) /“D.ON” (dark-switching)

J

Connection diagram

Cd-043

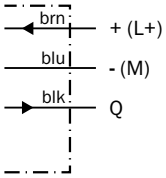

Cd-045

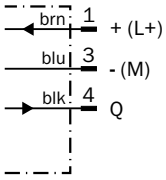

Cd-066

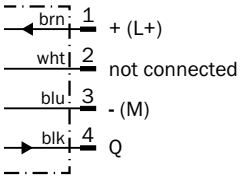

Cd-092

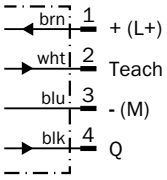

Cd-093

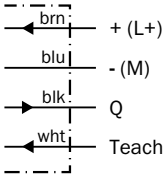

Function diagram

WLL170T-2

WLL170T-2 in sensor mode

Operating mode selector switch in RUN mode (after setting the switching threshold by means of Teach-in.

Orange LED display: lights up if supply connection Q is active. Dependent on setting of light/dark-selector switch.

Green LED display: lights up if light received is < 0.9 or > 1.1 (based on the switching threshold Q, switching threshold = 1).

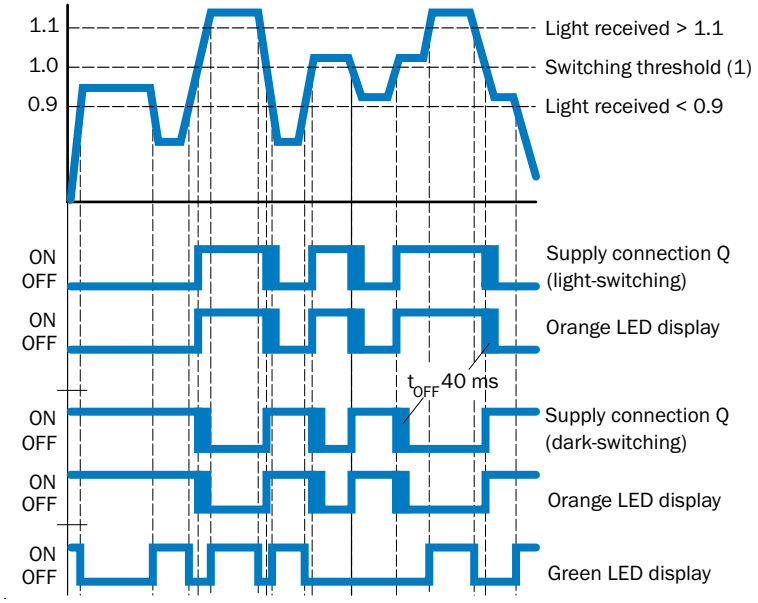

Recommended accessories

Mounting brackets/plates

Mounting brackets

Figure	Material	Description	Model name	Part no.
	Steel, zinc coated	Mounting bracket	BEF-WLL170	5306574

Plug connectors and cables

Connecting cable (female connector-open)

- **Cable material:** PVC
- **Enclosure rating:** IP 67, IP 69K

Figure	Connection type head A	Connection type head B	Connecting cable	Connector material	Model name	Part no.
	Female connector, M8, 3-pin, straight	Cable, open conductor heads	2 m, 3-wire	TPU	DOL-0803-G02M	6010785
			5 m, 3-wire	TPU	DOL-0803-G05M	6022009
	Female connector, M8, 3-pin, angled	Cable, open conductor heads	2 m, 3-wire	TPU	DOL-0803-W02M	6008489
			5 m, 3-wire	TPU	DOL-0803-W05M	6022010
	Female connector, M8, 4-pin, straight	Cable, open conductor heads	2 m, 4-wire	PVC	DOL-0804-G02M	6009870
			5 m, 4-wire	PVC	DOL-0804-G05M	6009872
	Female connector, M8, 4-pin, angled	Cable, open conductor heads	2 m, 4-wire	PVC	DOL-0804-W02M	6009871
			5 m, 4-wire	PVC	DOL-0804-W05M	6009873

Female connector (ready to assemble)

Figure	Connection type head A	Connection type head B	Connector material	Description	Model name	Part no.
	Female connector, M8, 3-pin, straight	Screw-type terminals	PBT	IP 67	DOS-0803-G	7902077
	Female connector, M8, 3-pin, angled	Pin penetration	PBT	IP 67	DOS-0803-W	7902078
	Female connector, M8, 4-pin, straight	Screw-type terminals	PBT	IP 67	DOS-0804-G	6009974
	Female connector, M8, 4-pin, angled	Pin penetration	PBT	IP 67	DOS-0804-W	6009975

Male connector (ready to assemble)

Figure	Connection type head A	Connection type head B	Connector material	Description	Model name	Part no.
	Male connector, M8, 3-pin, straight	Screw-type terminals	PBT	IP 67	STE-0803-G	6037322
	Male connector, M8, 4-pin, straight	Screw-type terminals	PBT	IP 67	STE-0804-G	6037323

J

Other mounting accessories

Others

Figure	Material	Description	Model name	Part no.
	Stainless steel	Rail end piece for block mounting	BF-EB01-W190	5313011
	Plastic	Cutter for fibers, supplied with LL3, 10 mm x 37 mm x 65 mm	FC	5304141

→ **For additional accessories, please see page L-861**

J

High-performance fiber-optic sensor with world's fastest response time

Product description

The WLL180T fiber-optic photoelectric sensor family provides the world's fastest response time - only 16 µs. In addition, it offers superior sensing distances of up to 20 m and its high light intensity delivers a reliable, high-powered solution – even in difficult ambient conditions, like dust, spray, mist, and water jets. Commissioning is simple – either via the external teach-in input or directly on the unit. Two, four-digit displays provide visualization of all programming steps, status displays, plus target and actual values through an intuitive menu structure. The WLL180T sensors can be operated either as a stand-alone or in a bus configuration, depending on the requirements. In a bus configuration, several sensors are networked via an internal bus, enabling the settings on one WLL180T to be copied to all other devices on the bus. Fiber-optic amplifier cross-talk is prevented by the sensors' integrated anti-interference logic.

At a glance

- Selectable response time up to 16 µs
- Sensing range up to 20 m (Through-beam system); up to 1400 mm (proximity system)
- Bus-compatible with anti-interference
- 2 x 4-digit display
- Adjustable hysteresis
- Rotatable display screen
- High-resolution signal processing
- Programmable time delays

Your benefits

- Reliable, rapid process detection, even under the most difficult ambient conditions, such as dust, spray or mist
- Easy commissioning and product changeover due to external teach-in
- Cross-talk is eliminated when utilizing bus configuration option
- Quick, easy setup and adjustment due to an intuitive operating menu
- Flexible parameter adjustment due to high-resolution signal processing. Hysteresis and time delays can be adapted to suit the application, e.g., when detecting tiny or transparent objects
- Easy-to-read display, even under difficult installation conditions

Additional information

→ **www.mysick.com/en/WLL180T**

For more information, just enter the link or scan the QR code and get direct access to technical data, CAD design models, operating instructions, software, application examples and much more.

J

Detailed technical data

Features

Sensor principle	Fiber-optic photoelectric sensor
Device type	Stand-alone/Base unit [1]/Expansion unit (depending on type)
Dimensions (W x H x D)	10.5 mm x 34.6 mm x 71.9 mm
Housing design (light emission)	Rectangular
Sensing range max. [2]	0 m ... 20 m, through-beam system [3] (depending on type)
Sensing range	0 mm ... 1,400 mm, proximity system [4] [5] 0 ... 18 m, through-beam system [3] (depending on type)
Type of light	Visible red light / Infrared light (depending on type)
Light source [6]	LED
Angle of dispersion	Approx. 65°
Wave length	
Visible red light	650 nm
Infrared light	1,450 nm
Teach-in	Menu-controlled
Time type	Without time delay Time delay off Switch on delay ON and OFF delay One shot
Delay time	Programmable: 0 ms ... 9,999 ms
Indication	Display
Display	LED status display / 2x 4-character digital dual displays, Set value (green indicator) and actual value (red indicator) are displayed simultaneously, display of parameters

[1] Up to 15 expansion units can be connected.
[2] Sensing range with 8 ms response time. Reduction with shorter response time (see tables LL3/WLL180T)
[3] LL3-TX01.
[4] Objects to be sensed with 90% reflectivity (based on DIN 5033 white standard). Sensing range with 8 ms response time. Reduction with shorter response time (see tables LL3/WLL180T)
[5] LL3-DK06.
[6] Average service life of 100,000 h at T_A = +25 °C.

Mechanics/electronics

Supply voltage [1]	12 V DC ... 24 V DC
Ripple [2]	≤ 10 %
Power consumption [3]	≤ 50 mA
Output type	PNP, open collector/NPN, open collector (depending on type)
Switching mode	Light/dark-switching (manually selectable)
Output current $I_{max.}$	≤ 100 mA
Response time [4]	≤ 2 ms, ≤ 8 ms, ≤ 16 µs, ≤ 70 µs, ≤ 250 µs
Switching frequency	31.2 kHz, 7.1 kHz, 2 kHz, 250 Hz, 62.5 Hz
Connection type	Cable, 2 m [5]/Male connector, M8 (depending on type)
Circuit protection	A [6], B [7], C [8], D [9]
Protection class	III

J

Housing material	ABS/PC
Enclosure rating [10]	IP 50
Ambient operating temperature	–25 °C ... +55 °C [11] (depending on type)
Ambient storage temperature	–40 °C ... +70 °C

[1] +- 10%.
[2] May not exceed or fall short of V_S tolerances.
[3] Without load.
[4] Selectable.
[5] Do not bend below 0 °C.
[6] A = V_S connections reverse-polarity protected.
[7] B = inputs and output reverse-polarity protected.
[8] C = interference suppression.
[9] D = outputs overcurrent and short-circuit protected.
[10] With correctly attached fibre-optic cable LL3 and closed protection hood.
[11] Operating temperature fluctuates according to number of devices connected: 4–8 devices: –25 °C ... +50 °C (output current 50 mA) / 9–16 devices: –25 °C ... +45 °C (output current 20 mA)

Ordering information

Other models available at www.mysick.com/en/WLL180T

Stand-alone

- **Adjustment:** Teach-in buttoncable+/– increment button, manual

Type of light	Sensing range max. [1]	Output type	Connection	Connection diagram	Model name	Part no.
Visible red light	0 m ... 20 m, through-beam system [2]	PNP	Cable, 4-wire, 2 m	Cd-136	WLL180T-P432	6039093
			Male connector, M8, 4-pin	Cd-134	WLL180T-P434	6039095
		NPN	Cable, 4-wire, 2 m	Cd-136	WLL180T-N432	6039094
			Male connector, M8, 4-pin	Cd-134	WLL180T-N434	6039096
Infrared light	0 mm ... 1,000 mm, through-beam system [3]	PNP	Male connector, M8, 4-pin	Cd-134	WLL180T-P474	6039618
		NPN	Male connector, M8, 4-pin	Cd-134	WLL180T-N474	6039619

[1] Sensing range with 8 ms response time. Reduction with shorter response time (see tables LL3/WLL180T)
[2] LL3-TX01.
[3] LL3-TW01.

Base unit

- **Type of light:** visible red light
- **Adjustment:** Teach-in button, cable, manual +/– increment button
- **Sensing range max.:** 0 m ... 20 m, through-beam system (Sensing range with 8 ms response time. Reduction with shorter response time (see tables LL3/WLL180T)) (LL3-TX01.)

Output type	Connection	Connection diagram	Model name	Part no.
PNP	Cable, 4-wire, 2 m	Cd-138	WLL180T-M432	6039097
	Male connector, M8, 3-pin	Cd-045	WLL180T-M333	6042428
	Male connector, M8, 4-pin	Cd-140	WLL180T-M434	6039101
NPN	Cable, 4-wire, 2 m	Cd-138	WLL180T-L432	6039099
	Male connector, M8, 3-pin	Cd-045	WLL180T-L333	6049837
	Male connector, M8, 4-pin	Cd-140	WLL180T-L434	6039103
2 x PNP	Male connector, M8, 4-pin	Cd-213	WLL180T-M634	6050760

Expansion unit

- **Type of light:** visible red light
- **Adjustment:** Teach-in buttoncable+/– increment button, manual
- **Sensing range max.:** 0 m ... 20 m, through-beam system (Sensing range with 8 ms response time. Reduction with shorter response time (see tables LL3/WLL180T)) (LL3-TX01.)

Output type	Connection	Connection diagram	Model name	Part no.
PNP	Cable, 2-wire, 2 m	Cd-138	WLL180T-F232	6039098
	Male connector, M8, 3-pin	Cd-045	WLL180T-F333	6042429
	Male connector, M8, 4-pin	Cd-140	WLL180T-F434	6039102
NPN	Cable, 2-wire, 2 m	Cd-138	WLL180T-E232	6039100
	Male connector, M8, 3-pin	Cd-045	WLL180T-E333	6049838
	Male connector, M8, 4-pin	Cd-140	WLL180T-E434	6039104
2 x NPN	Cable, 2-wire, 2 m	Cd-214	WLL180T-E632	6050763

Dimensional drawings

Dimensions in mm (inch)

Stand-alone

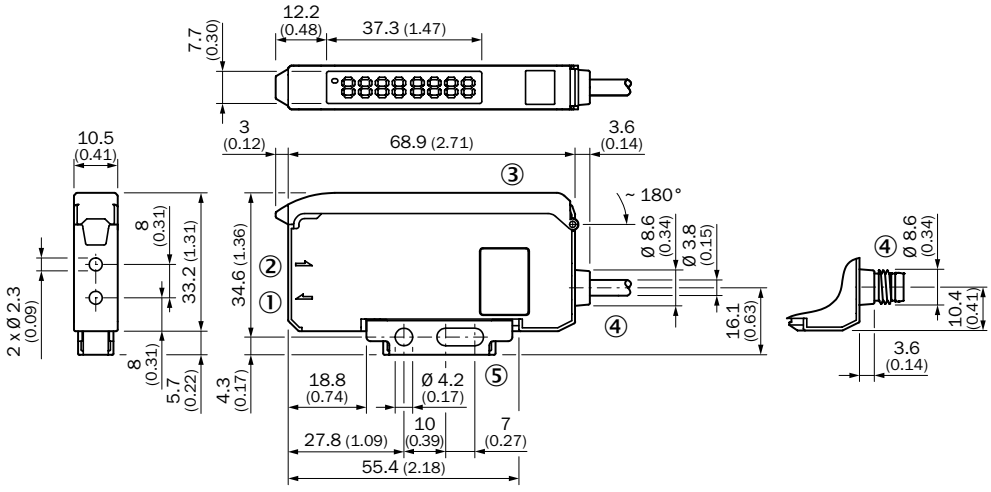

① Sender LED, installation of LL3 fibre-optic cable (sender fibre)
② Receiver, installation of LL3 fibre optic cable (receiver fibre)
③ Protective hood, can be raised at both ends
④ Connection
⑤ Mounting bracket, included

Base unit

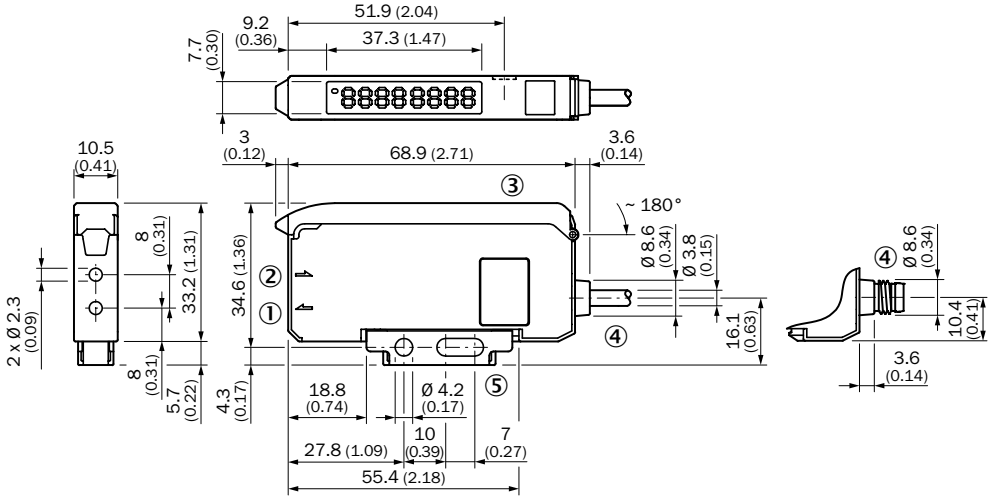

① Sender LED, installation of LL3 fibre-optic cable (sender fibre)
② Receiver, installation of LL3 fibre optic cable (receiver fibre)
③ Protective hood, can be raised at both ends
④ Connection
⑤ Mounting bracket, included

J

Extension unit

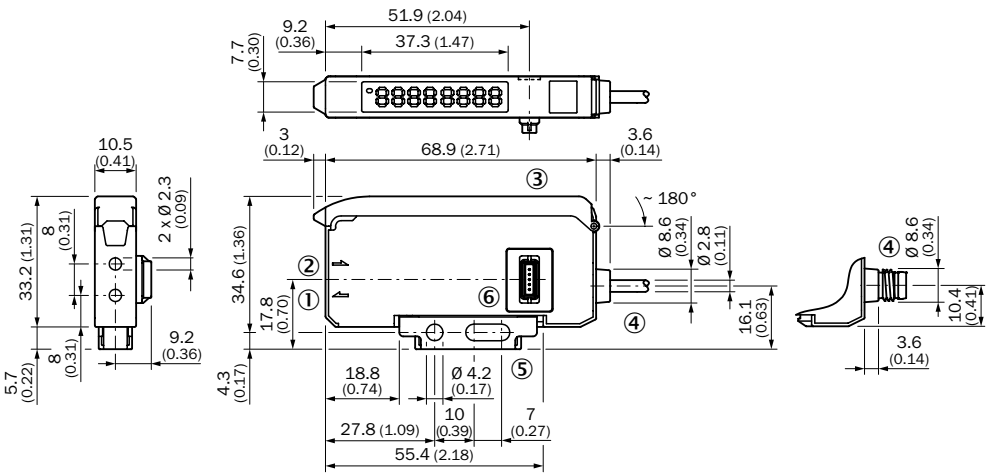

① Sender LED, installation of LL3 fibre-optic cable (sender fibre)
② Receiver, installation of LL3 fibre optic cable (receiver fibre)
③ Protective hood, can be raised at both ends
④ Connection
⑤ Mounting bracket, included
⑥ Bus connector

Adjustments

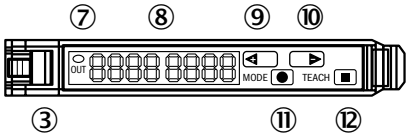

③ Locking the fiber-optic cables
⑦ LED indicator orange, lights up when switching output is active
⑧ Numeric display 2 x 4-digit; green: switching threshold, operating mode; red: actual value, Teach-in and function parameter
⑨ Step-button> (manual switching threshold: higher; or next function parameter)
⑩ Step-button< (manual switching threshold: lower; or previous function parameter)
⑪ Mode/Enter-button
⑫ Teach-in button

Connection diagram

Cd-045

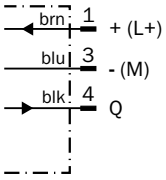

Cd-134

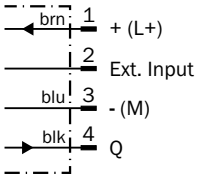

Cd-136

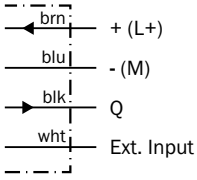

Cd-138

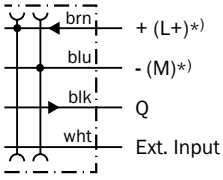

*) Only base unit

J

Cd-140

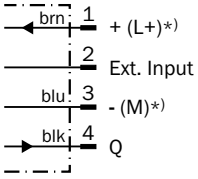

*) Only base unit

Cd-213

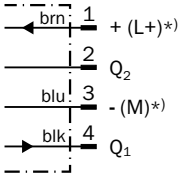

*) Only base unit

Cd-214

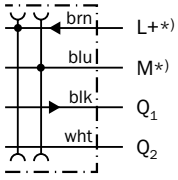

*) Only base unit

Recommended accessories

Mounting brackets/plates

Mounting brackets

Figure	Material	Description	Model name	Part no.
	Steel, zinc coated	Mounting bracket	BEF-WLL170	5306574
			BEF-WLL180	5325812

Plug connectors and cables

Connecting cable (female connector-open)

- **Cable material:** PVC
- **Enclosure rating:** IP 67, IP 69K

Figure	Connection type head A	Connection type head B	Connecting cable	Connector material	Model name	Part no.
	Female connector, M8, 3-pin, straight	Cable, open conductor heads	2 m, 3-wire	TPU	DOL-0803-G02M	6010785
			5 m, 3-wire	TPU	DOL-0803-G05M	6022009
	Female connector, M8, 3-pin, angled	Cable, open conductor heads	2 m, 3-wire	TPU	DOL-0803-W02M	6008489
			5 m, 3-wire	TPU	DOL-0803-W05M	6022010
	Female connector, M8, 4-pin, straight	Cable, open conductor heads	2 m, 4-wire	PVC	DOL-0804-G02M	6009870
			5 m, 4-wire	PVC	DOL-0804-G05M	6009872
	Female connector, M8, 4-pin, angled	Cable, open conductor heads	2 m, 4-wire	PVC	DOL-0804-W02M	6009871
			5 m, 4-wire	PVC	DOL-0804-W05M	6009873

Other mounting accessories

Others

Figure	Material	Description	Model name	Part no.
	Stainless steel	Rail end piece for block mounting	BF-EB01-W190	5313011
	Plastic	Cutter for fibers, supplied with LL3, 10 mm x 37 mm x 65 mm	FC	5304141

→ **For additional accessories, please see page L-861**

J

A wide variety of solutions to your most challenging applications: SICK's fiber-optic cables

Product description

For any application-oriented sensor solution, a suitable fiber-optic cable must be chosen. At SICK, the broad range of fiber-optic cables made from plastic and glass fibers permits optimal automation solutions. This applies in particular to tasks for which the fiber-optic cable requires application-specific adaption, where flexible cable installation is crucial, where high temperatures prevail, or a particular material compatibility is important. While the fibers of plastic fiber-optic cables are characterized, among other things, by the smallest of bend radii and maximum flexibility, and can also be shortened to any length, the glass fiber-optic cables are more chemically resistant and suitable for a higher temperature range. The wide variety of end sleeve options or individual special sleeves enable virtually any installation possibility. Depending on the application, the fiber-optic cable's protective cladding can be made from plastic, metal, or Teflon for exposure to aggressive chemicals.

At a glance

- Very large selection of plastic and glass fiber-optic cables.
- Fiber-optic cables resistant to chemicals and high temperature
- Threaded and smooth sleeves, bands of light (array), 90° reflection versions available
- Focused optics
- Proximity and through-beam versions available
- Plastic, protective metal or Teflon sheathing available

Your benefits

- Very large selection of fiber-optic cables with plastic and glass fibers, giving users more application flexibility
- Resistant to damage caused by mechanical and chemical stress, as well as high temperatures
- Standard and customer-specific types
- Simple installation saves time
- For detection of objects, surfaces, leading edges, and fluid levels

J

Additional information

→ **www.mysick.com/en/LL3**

For more information, just enter the link or scan the QR code and get direct access to technical data, CAD design models, operating instructions, software, application examples and much more.

Selection chart

Detection principle	Category	Ordering information (page)	Dimensional drawing (page)
Proximity system	Threaded sleeve	J-806	J-833
	Smooth sleeve	J-808	J-835
	90° deflection	J-809	J-836
	Flat type	J-810	J-836
	Long end sleeve	J-812	J-839
	Area detection	J-814	J-841
	Heat-resistant	J-815	J-842
	Resistant to oil/chemicals	J-815	J-842
	LCDs/transparent objects/semiconductors	J-816	J-843
	Retro-reflective	J-816	J-843
	Liquid level	J-817	J-844
	Tip adapters	J-832	J-855
Through-beam system	Threaded sleeve	J-818	J-845
	Smooth sleeve	J-819	J-846
	90° deflection	J-820	J-847
	Flat type	J-821	J-848
	Long end sleeve	J-823	J-850
	Area detection	J-824	J-851
	Heat-resistant	J-825	J-852
	LCDs/transparent objects/semiconductors	J-826	J-854
	Resistant to oil/chemicals	J-827	J-854
	Liquid level	J-827	J-855
	Tip adapters	J-828	J-855

Ordering information

Other models available at www.mysick.com/en/LL3

Threaded sleeve

- **Detection principle:** Proximity system

Figure	Length	Minimal object diameter	Minimum bend radius	Fiber-optic cable cut-table	Sensing range with WLL180	Sensing range with WLL170	Model name	Part no.
 M3	1,000 mm	≥ 0.02 mm	10 mm	–	14 mm [1] 49 mm [2] 99 mm [3] 190 mm [4] 210 mm [5]	60 mm [6] 27 mm [7] 17 mm [8]	LL3-DJ01	5325989
 M6					38 mm [1] 120 mm [2] 230 mm [3] 460 mm [4] 490 mm [5]	110 mm [6] 50 mm [7] 30 mm [8]	LL3-DJ02	5325992
 M3		≥ 0.015 mm	4 mm	✔	18 mm [1] 50 mm [2] 90 mm [3] 200 mm [4] 370 mm [5]	22 mm [6] 9 mm [7] 3 mm [8]	LL3-DR02	5308079
 M4	2,000 mm	≥ 0.015 mm	4 mm	✔	18 mm [1] 60 mm [2] 100 mm [3] 220 mm [4] 360 mm [5]	37 mm [6] 11 mm [7] 5 mm [8]	LL3-DR06	5308082
 M3			15 mm	✔	18 mm [1] 55 mm [2] 95 mm [3] 190 mm [4] 360 mm [5]	47 mm [6] 17 mm [7] 7 mm [8]	LL3-DS06	5308073
 M3					40 mm [1] 130 mm [2] 200 mm [3] 350 mm [4] 600 mm [5]	75 mm [6] 22 mm [7] 11 mm [8]	LL3-DT01	5308076
 M6			25 mm	✔	90 mm [1] 280 mm [2] 500 mm [3] 900 mm [4] 1,350 mm [5]	160 mm [6] 62 mm [7] 37 mm [8]	LL3-DB01	5308074
 M6					90 mm [1] 300 mm [2] 500 mm [3] 900 mm [4] 1,350 mm [5]	160 mm [6] 62 mm [7] 37 mm [8]	LL3-DB03	5313021
 M4					90 mm [1] 280 mm [2] 500 mm [3] 900 mm [4] 1,350 mm [5]	90 mm [6] 55 mm [7] 50 mm [8]	LL3-DB04	5325990

[1] Operating mode: 16 µs. [2] Operating mode: 70 µs. [3] Operating mode: 250 µs. [4] Operating mode: 2 ms. [5] Operating mode: 8 ms.
[6] Red light: 250 µs. [7] High speed: 50 µs. [8] Green light: 250 µs.

J

Figure	Length	Minimal object diameter	Minimum bend radius	Fiber-optic cable cut-table	Sensing range with WLL180	Sensing range with WLL170	Model name	Part no.
	2,000 mm	≥ 0.015 mm	25 mm	✔	100 mm [1] 300 mm [2] 500 mm [3] 900 mm [4] 1,400 mm [5]	165 mm [6] 65 mm [7] 37 mm [8]	LL3-DK06	5313019
			2 mm	✔	90 mm [1] 300 mm [2] 500 mm [3] 900 mm [4] 1,400 mm [5]	115 mm [6] 47 mm [7] 27 mm [8]	LL3-DK66	5313024
							LL3-DK67	5313025
			4 mm	✔	90 mm [1] 280 mm [2] 450 mm [3] 880 mm [4] 1,350 mm [5]	135 mm [6] 50 mm [7] 20 mm [8]	LL3-DR01	5308078
		≥ 0.02 mm	4 mm	✔	8 mm [1] 25 mm [2] 46 mm [3] 90 mm [4] 98 mm [5]	22 mm [6] 9 mm [7] 6 mm [8]	LL3-DR08	5326037
			15 mm	–	14 mm [1] 45 mm [2] 75 mm [3] 135 mm [4] 200 mm [5]	17 mm [6] 7 mm [7] 3 mm [8]	LL3-DK21	5313023
				✔	40 mm [1] 130 mm [2] 200 mm [3] 350 mm [4] 600 mm [5]	72 mm [6] 22 mm [7] 11 mm [8]	LL3-DM02	5308077
			25 mm	✔	27 mm [1] 88 mm [2] 165 mm [3] 330 mm [4] 350 mm [5]	65 mm [6] 30 mm [7] 20 mm [8]	LL3-DB07	5325988
				✔	75 mm [1] 255 mm [2] 420 mm [3] 800 mm [4] 1,300 mm [5]	165 mm [6] 65 mm [7] 37 mm [8]	LL3-DM01	5308071

[1] Operating mode: 16 µs. [2] Operating mode: 70 µs. [3] Operating mode: 250 µs. [4] Operating mode: 2 ms. [5] Operating mode: 8 ms.
[6] Red light: 250 µs. [7] High speed: 50 µs. [8] Green light: 250 µs.

→ **For dimensional drawings, please see page J-833**

J

Smooth sleeve

- **Detection principle:** Proximity system

Figure	Length	Minimal object diameter	Minimum bend radius	Fiber-optic cable cut-table	Sensing range with WLL180	Sensing range with WLL170	Model name	Part no.
	1,000 mm	≥ 0.015 mm	4 mm	–	20 mm [1] 70 mm [2] 110 mm [3] 220 mm [4] 360 mm [5]	25 mm [6] 9 mm [7] 3 mm [8]	LL3-DR04	5308081
		≥ 0.02 mm	10 mm	–	3 mm [2] 14 mm [3] 29 mm [4] 31 mm [5]	3.5 mm [6] 3.5 mm [7]	LL3-DP01	5325998
	2,000 mm	≥ 0.015 mm	2 mm	✔	65 mm [1] 200 mm [2] 350 mm [3] 650 mm [4] 1,000 mm [5]	115 mm [6] 47 mm [7] 27 mm [8]	LL3-DK4Z	5313026
			4 mm	✔	30 mm [1] 85 mm [2] 140 mm [3] 300 mm [4] 600 mm [5]	37 mm [6] 13 mm [7] 8 mm [8]	LL3-DR03	5308080
			15 mm	✔	18 mm [1] 55 mm [2] 95 mm [3] 190 mm [4] 360 mm [5]	47 mm [6] 17 mm [7] 7 mm [8]	LL3-DT03	5308072
			25 mm	✔	100 mm [1] 300 mm [2] 500 mm [3] 900 mm [4] 1,400 mm [5]	165 mm [6] 65 mm [7] 37 mm [8]	LL3-DK04	5313020
		≥ 0.02 mm	1 mm	✔	4 mm [1] 13 mm [2] 27 mm [3] 55 mm [4] 59 mm [5]	11 mm [6] 5 mm [7]	LL3-DR12	5326001
			2 mm	✔	22 mm [1] 74 mm [2] 140 mm [3] 280 mm [4] 300 mm [5]	65 mm [6] 30 mm [7] 20 mm [8]	LL3-DR11	5326000
			25 mm	✔	70 mm [1] 220 mm [2] 360 mm [3] 720 mm [4] 770 mm [5]	170 mm [6] 75 mm [7] 60 mm [8]	LL3-DB10	5325999

[1] Operating mode: 16 µs. [2] Operating mode: 70 µs. [3] Operating mode: 250 µs. [4] Operating mode: 2 ms. [5] Operating mode: 8 ms.
[6] Red light: 250 µs. [7] High speed: 50 µs. [8] Green light: 250 µs.

→ **For dimensional drawings, please see page J-835**

J

90° deflection

- **Detection principle:** Proximity system
- **Length:** 2,000 mm
- **Fiber-optic cable cuttable:** ✔

Figure	Minimal object diameter	Minimum bend radius	Sensing range with WLL180	Sensing range with WLL170	Model name	Part no.
	≥ 0.015 mm	2 mm	20 mm [1] 110 mm [2] 180 mm [3] 400 mm [4] 650 mm [5]	16 mm [6] 12 mm [7] 12 mm [8]	LL3-DV07	5322551
		25 mm	25 mm [1] 110 mm [2] 185 mm [3] 400 mm [4] 650 mm [5]	47 mm [6] 17 mm [7] 17 mm [8]	LL3-DV05	5322549
			30 mm [1] 130 mm [2] 210 mm [3] 450 mm [4] 800 mm [5]	47 mm [6] 12 mm [7] 12 mm [8]	LL3-DV06	5322550
	≥ 0.02 mm	25 mm	47 mm [1] 165 mm [2] 285 mm [3] 575 mm [4] 610 mm [5]	110 mm [6] 55 mm [7] 30 mm [8]	LL3-DB09	5325991

[1] Operating mode: 16 µs. [2] Operating mode: 70 µs. [3] Operating mode: 250 µs. [4] Operating mode: 2 ms. [5] Operating mode: 8 ms.
[6] Red light: 250 µs. [7] High speed: 50 µs. [8] Green light: 250 µs.

→ **For dimensional drawings, please see page J-836**

J

Flat type

- **Detection principle:** Proximity system

Figure	Length	Minimal object diameter	Minimum bend radius	Fiber-optic cable cut-table	Sensing range with WLL180	Sensing range with WLL170	Model name	Part no.
	1,000 mm	≥ 0.01 mm	1 mm	✔	13 mm [1] 48 mm [2] 86 mm [3] 170 mm [4] 180 mm [5]	35 mm [6] 15 mm [7] 12 mm [8]	LL3-DE02	5324497
		≥ 0.16 mm	1 mm	✔	11 mm [1] 38 mm [2] 78 mm [3] 150 mm [4] 160 mm [5]	35 mm [6] 8 mm [7]	LL3-DE01	5325285
		≥ 0.3 mm	1 mm	✔	2 mm [1] 4 mm [2] 6 mm [3] 9 mm [4] 10 mm [5]	4.5 mm [6] 2.5 mm [7] 2.5 mm [8]	LL3-DC08	5326029
	2,000 mm	–	4 mm	✔	15 mm [1] 22 mm [2] 23 mm [3] 25 mm [4] 25 mm [5]	15 mm [6] 15 mm [7] 10 mm [8]	LL3-DC06	5326017
		≥ 0.01 mm	1 mm	✔	12 mm [1] 25 mm [2] 37 mm [3] 75 mm [4] 90 mm [5]	30 mm [6] 10 mm [7] 5 mm [8]	LL3-DC47	5324268
					35 mm [1] 45 mm [2] 55 mm [3] 250 mm [4] 330 mm [5]	50 mm [6] 35 mm [7] 10 mm [8]	LL3-DC57	5324269
		≥ 0.02 mm	10 mm	✔	8 mm [1] 10 mm [2] 11 mm [3] 13 mm [4] 17 mm [5]	8 mm [6] 8 mm [7] 8 mm [8]	LL3-DC09	5326028
			25 mm	–	5 mm [1] 10 mm [2] 19 mm [3] 37 mm [4] 43 mm [5]	7 mm [6] 10.5 mm [7] 9 mm [8]	LL3-DH06	5326026
				✔	5 mm [1] 11 mm [2] 22 mm [3] 30 mm [4] 38 mm [5]	11 mm [6] 15.5 mm [7] 9.3 mm [8]	LL3-DH08	5326025

[1] Operating mode: 16 µs. [2] Operating mode: 70 µs. [3] Operating mode: 250 µs. [4] Operating mode: 2 ms. [5] Operating mode: 8 ms.
[6] Red light: 250 µs. [7] High speed: 50 µs. [8] Green light: 250 µs.

J

Figure	Length	Minimal object diameter	Minimum bend radius	Fiber-optic cable cut-table	Sensing range with WLL180	Sensing range with WLL170	Model name	Part no.
	2,000 mm	≥ 0.03 mm	1 mm	✔	45 mm [1] 130 mm [2] 250 mm [3] 510 mm [4] 550 mm [5]	110 mm [6] 43 mm [7] 31 mm [8]	LL3-DE03	5325986
					50 mm [1] 130 mm [2] 250 mm [3] 500 mm [4] 540 mm [5]	110 mm [6] 50 mm [7] 35 mm [8]	LL3-DE04	5325987
					110 mm [1] 345 mm [2] 560 mm [3] 1,100 mm [4] 1,190 mm [5]	300 mm [6] 120 mm [7] 80 mm [8]	LL3-DR09	5325528
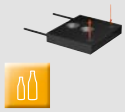		≥ 0.06 mm	10 mm	✔	8 mm [1] 12 mm [2] 14 mm [3] 16 mm [4] 18 mm [5]	10 mm [6] 8 mm [7] 8 mm [8]	LL3-DC07	5326019
	3,000 mm	–	4 mm	✔	18 mm [1] 31 mm [2] 34 mm [3] 38 mm [4] 38 mm [5]	20 mm [6] 20 mm [7] 15 mm [8]	LL3-DC04	5326018
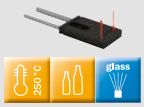		≥ 0.02 mm	25 mm	–	11 mm [1] 18 mm [2] 21 mm [3] 24 mm [4] 26 mm [5]	18 mm [6] 18 mm [7] 15 mm [8]	LL3-DH10	5326023
					19 mm [1] 29 mm [2] 34 mm [3] 39 mm [4] 42 mm [5]	24 mm [6] 24 mm [7] 24 mm [8]	LL3-DH11	5326024
	4,000 mm	≥ 0.3 mm	25 mm	✔	60 mm [1] 75 mm [2] 85 mm [3] 150 mm [4] 280 mm [5]	80 mm [6] 60 mm [7] 60 mm [8]	LL3-DC03	5326020

[1] Operating mode: 16 µs. [2] Operating mode: 70 µs. [3] Operating mode: 250 µs. [4] Operating mode: 2 ms. [5] Operating mode: 8 ms.
[6] Red light: 250 µs. [7] High speed: 50 µs. [8] Green light: 250 µs.

→ **For dimensional drawings, please see page J-836**

J

Long end sleeve

- **Detection principle:** Proximity system

Figure	Length	Minimal object diameter	Minimum bend radius	Fiber-optic cable cut-table	Sensing range with WLL180	Sensing range with WLL170	Model name	Part no.
	500 mm	≥ 0.015 mm	4 mm	✔	10 mm [1] 30 mm [2] 60 mm [3] 140 mm [4] 225 mm [5]	9 mm [6] 4 mm [7] 2 mm [8]	LL3-DT02	5308085
				–	13 mm [1] 45 mm [2] 80 mm [3] 140 mm [4] 280 mm [5]	9 mm [6] 4 mm [7] 2 mm [8]	LL3-DT04	5308086
					10 mm [1] 30 mm [2] 60 mm [3] 140 mm [4] 225 mm [5]	12 mm [6] 4 mm [7] 2 mm [8]	LL3-DR05	5308087
	1,000 mm	≥ 0.015 mm	25 mm	–	5 mm [1] 15 mm [2] 35 mm [3] 65 mm [4] 120 mm [5]	7 mm [6] 3 mm [7]	LL3-DR07	5326007
		≥ 0.02 mm	25 mm	–	8 mm [1] 25 mm [2] 52 mm [3] 100 mm [4] 110 mm [5]	22 mm [6] 6 mm [7] 6 mm [8]	LL3-DB05	5326002
					55 mm [1] 220 mm [2] 580 mm [3] 1,170 mm [4] 1,240 mm [5]	220 mm [6] 90 mm [7] 70 mm [8]	LL3-DH05	5326021
	2,000 mm	≥ 0.015 mm	2 mm	✔	90 mm [1] 300 mm [2] 500 mm [3] 900 mm [4] 1,400 mm [5]	115 mm [6] 47 mm [7] 27 mm [8]	LL3-DK63Z	5313027
			15 mm	✔	10 mm [1] 28 mm [2] 45 mm [3] 93 mm [4] 170 mm [5]	47 mm [6] 17 mm [7] 8 mm [8]	LL3-DK43	5313030
					10 mm [1] 25 mm [2] 45 mm [3] 90 mm [4] 170 mm [5]	50 mm [6] 17 mm [7] 8 mm [8]	LL3-DM03	5308084
					10 mm [1] 28 mm [2] 45 mm [3] 95 mm [4] 170 mm [5]	50 mm [6] 17 mm [7] 8 mm [8]	LL3-DT05	5313028

[1] Operating mode: 16 µs. [2] Operating mode: 70 µs. [3] Operating mode: 250 µs. [4] Operating mode: 2 ms. [5] Operating mode: 8 ms.
[6] Red light: 250 µs. [7] High speed: 50 µs. [8] Green light: 250 µs.

J

Figure	Length	Minimal object diameter	Minimum bend radius	Fiber-optic cable cut-table	Sensing range with WLL180	Sensing range with WLL170	Model name	Part no.
	2,000 mm	≥ 0.015 mm	15 mm	✔	10 mm [1] 35 mm [2] 70 mm [3] 125 mm [4] 290 mm [5]	16 mm [6] 3 mm [7] 3 mm [8]	LL3-DV02	5308089
			25 mm	✔	100 mm [1] 350 mm [2] 580 mm [3] 850 mm [4] 1,300 mm [5]	170 mm [6] 67 mm [7] 42 mm [8]	LL3-DB02	5308083
		≥ 0.02 mm	1 mm	✔	12 mm [1] 40 mm [2] 77 mm [3] 150 mm [4] 160 mm [5]	35 mm [6] 15 mm [7] 9 mm [8]	LL3-DR10	5326005
			25 mm	✔	60 mm [1] 210 mm [2] 360 mm [3] 700 mm [4] 760 mm [5]	150 mm [6] 60 mm [7] 40 mm [8]	LL3-DB06	5326006
					17 mm [1] 55 mm [2] 107 mm [3] 200 mm [4] 220 mm [5]	45 mm [6] 18 mm [7] 13 mm [8]	LL3-DB08	5326004
				–	65 mm [1] 225 mm [2] 500 mm [3] 1,000 mm [4] 1,060 mm [5]	350 mm [6] 120 mm [7] 90 mm [8]	LL3-DH04	5326022
		≥ 0.025 mm	25 mm	✔	35 mm [1] 135 mm [2] 170 mm [3] 290 mm [4] 320 mm [5]	95 mm [6] 41 mm [7] 27 mm [8]	LL3-DK33	5313031
		≥ 0.025 mm	25 mm	✔	40 mm [1] 135 mm [2] 180 mm [3] 270 mm [4] 330 mm [5]	95 mm [6] 41 mm [7] 22 mm [8]	LL3-DV01	5308088
					35 mm [1] 135 mm [2] 170 mm [3] 290 mm [4] 320 mm [5]	95 mm [6] 41 mm [7] 22 mm [8]	LL3-DV03	5308090

[1] Operating mode: 16 µs. [2] Operating mode: 70 µs. [3] Operating mode: 250 µs. [4] Operating mode: 2 ms. [5] Operating mode: 8 ms.
[6] Red light: 250 µs. [7] High speed: 50 µs. [8] Green light: 250 µs.

→ **For dimensional drawings, please see page J-839**

J

Area detection

- **Detection principle:** Proximity system
- **Length:** 2,000 mm
- **Minimal object diameter:** ≥ 0.02 mm
- **Minimum bend radius:** 25 mm
- **Fiber-optic cable cuttable:** ✔

Figure	Sensing range with WLL180	Sensing range with WLL170	Model name	Part no.
	65 mm [1] 240 mm [2] 320 mm [3] 650 mm [4] 690 mm [5]	–	LL3-DZ01	5326013
	57 mm [1] 190 mm [2] 310 mm [3] 630 mm [4] 670 mm [5]	150 mm [6] 70 mm [7] 50 mm [8]	LL3-DZ02	5326014
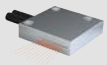	50 mm [1] 160 mm [2] 280 mm [3] 450 mm [4] 590 mm [5]	110 mm [6] 55 mm [7] 35 mm [8]	LL3-DZ03	5326015

[1] Operating mode: 16 µs. [2] Operating mode: 70 µs. [3] Operating mode: 250 µs. [4] Operating mode: 2 ms. [5] Operating mode: 8 ms.
[6] Red light: 250 µs. [7] High speed: 50 µs. [8] Green light: 250 µs.

→ **For dimensional drawings, please see page J-841**

J

Heat-resistant

- **Detection principle:** Proximity system

Figure	Length	Minimal object diameter	Minimum bend radius	Fiber-optic cable cut-table	Sensing range with WLL180	Sensing range with WLL170	Model name	Part no.
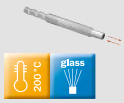	1,000 mm	≥ 0.02 mm	25 mm	–	65 mm [1] 260 mm [2] 670 mm [3] 1,340 mm [4] 1,430 mm [5]	220 mm [6] 100 mm [7] 70 mm [8]	LL3-DH07	5326031
					20 mm [1] 50 mm [2] 95 mm [3] 150 mm [4] 400 mm [5]	–	LL3-DW01	5315234
	2,000 mm	≥ 0.015 mm	25 mm	✔	70 mm [1] 230 mm [2] 350 mm [3] 600 mm [4] 1,000 mm [5]	125 mm [6] 45 mm [7] 8 mm [8]	LL3-DH02	5308092
			35 mm	✔	120 mm [1] 350 mm [2] 600 mm [3] 980 mm [4] 1,500 mm [5]	220 mm [6] 95 mm [7] 45 mm [8]	LL3-DH01	5308091
		≥ 0.02 mm	25 mm	–	55 mm [1] 220 mm [2] 490 mm [3] 990 mm [4] 1,050 mm [5]	170 mm [6] 80 mm [7] 50 mm [8]	LL3-DH03	5324787
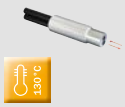				✔	70 mm [1] 230 mm [2] 370 mm [3] 750 mm [4] 800 mm [5]	220 mm [6] 90 mm [7] 70 mm [8]	LL3-DH09	5326030

[1] Operating mode: 16 µs. [2] Operating mode: 70 µs. [3] Operating mode: 250 µs. [4] Operating mode: 2 ms. [5] Operating mode: 8 ms.
[6] Red light: 250 µs. [7] High speed: 50 µs. [8] Green light: 250 µs.

→ **For dimensional drawings, please see page J-842**

Resistant to oil/chemicals

- **Detection principle:** Proximity system

Figure	Length	Minimal object diameter	Minimum bend radius	Sensing range with WLL180	Sensing range with WLL170	Model name	Part no.
	2,000 mm	≥ 0.02 mm	60 mm	100 mm [1] 180 mm [2] 200 mm [3] 150 mm [4] 280 mm [5]	50 mm [6] 27 mm [7] 12 mm [8]	LL3-DY01	5308093

[1] Operating mode: 16 µs. [2] Operating mode: 70 µs. [3] Operating mode: 250 µs. [4] Operating mode: 2 ms. [5] Operating mode: 8 ms.
[6] Red light: 250 µs. [7] High speed: 50 µs. [8] Green light: 250 µs.

→ **For dimensional drawings, please see page J-842**

LCDs/transparent objects/semiconductors

- **Detection principle:** Proximity system
- **Fiber-optic cable cuttable:** ✔

Figure	Length	Minimal object diameter	Minimum bend radius	Sensing range with WLL180	Sensing range with WLL170	Model name	Part no.
	2,000 mm	≥ 0.02 mm	10 mm	6 mm [1] 6 mm [2] 6 mm [3] 10 mm [4] 15 mm [5]	7 mm [6] 7 mm [7] 6 mm [8]	LL3-DC38	5322472
				4 mm [2] 4 mm [3] 4 mm [4] 4 mm [5]	5 mm [6] 4 mm [7] 4 mm [8]	LL3-DC39	5322513
	3,000 mm	≥ 25 mm	25 mm	18 mm [1] 29 mm [2] 35 mm [3] 40 mm [4] 43 mm [5]	22 mm [6] 22 mm [7] 25 mm [8]	LL3-DC05	5326016

[1] Operating mode: 16 µs. [2] Operating mode: 70 µs. [3] Operating mode: 250 µs. [4] Operating mode: 2 ms. [5] Operating mode: 8 ms.
[6] Red light: 250 µs. [7] High speed: 50 µs. [8] Green light: 250 µs.

→ **For dimensional drawings, please see page J-843**

Retro-reflective

- **Detection principle:** Proximity system
- **Length:** 2,000 mm
- **Fiber-optic cable cuttable:** ✔

Figure	Minimal object diameter	Minimum bend radius	Sensing range with WLL180	Sensing range with WLL170	Model name	Part no.
	≥ 0.06 mm	10 mm	105 mm [1] 190 mm [2] 230 mm [3] 460 mm [4] 490 mm [5]	220 mm [6] 80 mm [7] 65 mm [8]	LL3-RB01	5326010
			100 mm [1] 170 mm [2] 210 mm [3] 430 mm [4] 460 mm [5]	220 mm [6] 80 mm [7] 65 mm [8]	LL3-RB02	5326011
	≥ 0.12 mm	10 mm	80 mm [1] 200 mm [2] 310 mm [3] 620 mm [4] 660 mm [5]	–	LL3-RG01	5326012
	≥ 0.3 mm	1 mm	290 mm [1] 580 mm [2] 720 mm [3] 1,450 mm [4] 1,550 mm [5]	650 mm [6] 250 mm [7] 180 mm [8]	LL3-RR01	5326008

[1] Operating mode: 16 µs. [2] Operating mode: 70 µs. [3] Operating mode: 250 µs. [4] Operating mode: 2 ms. [5] Operating mode: 8 ms.
[6] Red light: 250 µs. [7] High speed: 50 µs. [8] Green light: 250 µs.

→ **For dimensional drawings, please see page J-843**

Liquid level

- **Detection principle:** Proximity system

Figure	Length	Minimum bend radius	Fiber-optic cable cuttable	Model name	Part no.
	2,000 mm	10 mm	✔	LL3-DF04	5326035
				LL3-DF05	5326034
				LL3-DF07	5326033
		30 mm	✔	LL3-DF02-S01	5321924
	5,000 mm	20 mm	✔	LL3-DW02	5325608

→ **For dimensional drawings, please see page J-844**

J

Threaded sleeve

- **Detection principle:** Through-beam system

Figure	Length	Minimal object diameter	Minimum bend radius	Fiber-optic cable cut-table	Sensing range with WLL180	Sensing range with WLL170	Model name	Part no.
	1,000 mm	≥ 0.05 mm	10 mm	–	145 mm [1] 460 mm [2] 830 mm [3] 1,600 mm [4] 1,770 mm [5]	40 mm [6] 120 mm [7] 150 mm [8]	LL3-TJ01	5325915
	2,000 mm	≥ 0.1 mm	4 mm	✔	60 mm [1] 175 mm [2] 330 mm [3] 750 mm [4] 1,100 mm [5]	115 mm [6] 38 mm [7] 23 mm [8]	LL3-TR02	5308053
			15 mm	✔	55 mm [1] 175 mm [2] 300 mm [3] 700 mm [4] 1,100 mm [5]	125 mm [6] 45 mm [7] 30 mm [8]	LL3-TM02	5308069
		≥ 0.2 mm	2 mm	✔	220 mm [1] 650 mm [2] 1,200 mm [3] 2,750 mm [4] 4,000 mm [5]	370 mm [6] 125 mm [7] 120 mm [8]	LL3-TK77	5313035
			25 mm	✔	225 mm [1] 650 mm [2] 1,200 mm [3] 2,500 mm [4] 4,000 mm [5]	470 mm [6] 165 mm [7] 135 mm [8]	LL3-TB02	5308048
					220 mm [1] 680 mm [2] 1,200 mm [3] 2,500 mm [4] 4,000 mm [5]	470 mm [6] 165 mm [7] 135 mm [8]	LL3-TM01	5308068
		≥ 0.3 mm	4 mm	✔	200 mm [1] 600 mm [2] 1,000 mm [3] 2,400 mm [4] 4,000 mm [5]	340 mm [6] 125 mm [7] 125 mm [8]	LL3-TR01	5308052
		≥ 0.5 mm	30 mm	✔	300 mm [1] 950 mm [2] 1,700 mm [3] 3,500 mm [4] 4,000 mm [5]	720 mm [6] 315 mm [7] 280 mm [8]	LL3-TB01	5308050
	10,000 mm	≥ 0.4 mm	25 mm	✔	6,600 mm [1] 19,500 mm [2] 19,500 mm [3] 19,500 mm [4] 19,500 mm [5]	19,500 mm [6] 7,500 mm [7] 6,000 mm [8]	LL3-TB08	5325917
	20,000 mm	≥ 0.5 mm	25 mm	✔	2,000 mm [1] 7,500 mm [2] 13,500 mm [3] 27,000 mm [4] 40,000 mm [5]	3,000 mm [6] 1,300 mm [7] 1,200 mm [8]	LL3-TX02	5325046

[1] Operating mode: 16 µs. [2] Operating mode: 70 µs. [3] Operating mode: 250 µs. [4] Operating mode: 2 ms. [5] Operating mode: 8 ms.
[6] Red light: 250 µs. [7] High speed: 50 µs. [8] Green light: 250 µs.

→ **For dimensional drawings, please see page J-845**

Smooth sleeve

- **Detection principle:** Through-beam system

Figure	Length	Minimal object diameter	Minimum bend radius	Fiber-optic cable cut-table	Sensing range with WLL180	Sensing range with WLL170	Model name	Part no.
	500 mm	≥ 0.02 mm	4 mm	–	5 mm [1] 17 mm [2] 28 mm [3] 56 mm [4] 60 mm [5]	12 mm [6] 5 mm [7] 5 mm [8]	LL3-TR04	5325918
	1,000 mm	≥ 0.1 mm	4 mm	✔	60 mm [1] 175 mm [2] 330 mm [3] 750 mm [4] 1,100 mm [5]	115 mm [6] 38 mm [7] 23 mm [8]	LL3-TR03	5308054
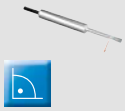		≥ 10 mm	10 mm	✔	6 mm [1] 19 mm [2] 38 mm [3] 74 mm [4] 130 mm [5]	18 mm [6] 7 mm [7] 11 mm [8]	LL3-TH06	5325926
	2,000 mm	≥ 0.02 mm	1 mm	✔	13 mm [1] 50 mm [2] 85 mm [3] 170 mm [4] 180 mm [5]	25 mm [6] 12 mm [7] 12 mm [8]	LL3-TG05	5325921
					380 mm [1] 1,220 mm [2] 2,000 mm [3] 4,000 mm [4] 4,000 mm [5]	800 mm [6] 250 mm [7] 250 mm [8]	LL3-TR10	5325920
		≥ 0.03 mm	25 mm	✔	180 mm [1] 540 mm [2] 890 mm [3] 1,700 mm [4] 1,900 mm [5]	400 mm [6] 190 mm [7] 200 mm [8]	LL3-TB07	5325919
		≥ 0.05 mm	25 mm	✔	590 mm [1] 1,790 mm [2] 2,400 mm [3] 4,000 mm [4] 4,000 mm [5]	1,100 mm [6] 600 mm [7] 500 mm [8]	LL3-TV08	5325922
		≥ 0.1 mm	15 mm	✔	55 mm [1] 175 mm [2] 300 mm [3] 700 mm [4] 1,100 mm [5]	125 mm [6] 45 mm [7] 30 mm [8]	LL3-TM03	5308070
		≥ 0.2 mm	2 mm	✔	220 mm [1] 650 mm [2] 1,200 mm [3] 2,750 mm [4] 4,000 mm [5]	370 mm [6] 125 mm [7] 120 mm [8]	LL3-TK05	5313034
		≥ 0.5 mm	30 mm	✔	275 mm [1] 1,000 mm [2] 1,800 mm [3] 3,500 mm [4] 4,000 mm [5]	720 mm [6] 315 mm [7] 280 mm [8]	LL3-TS07	5308049

[1] Operating mode: 16 µs. [2] Operating mode: 70 µs. [3] Operating mode: 250 µs. [4] Operating mode: 2 ms. [5] Operating mode: 8 ms.
[6] Red light: 250 µs. [7] High speed: 50 µs. [8] Green light: 250 µs.

→ **For dimensional drawings, please see page J-846**

90° deflection

- **Detection principle:** Through-beam system

Figure	Length	Minimal object diameter	Minimum bend radius	Fiber-optic cable cut-table	Sensing range with WLL180	Sensing range with WLL170	Model name	Part no.
	2,000 mm	≥ 0.04 mm	1 mm	✔	360 mm [1] 1,200 mm [2] 2,200 mm [3] 4,000 mm [4] 4,000 mm [5]	900 mm [6] 500 mm [7] 450 mm [8]	LL3-TR09	5325985
		≥ 0.05 mm	25 mm	✔	150 mm [1] 480 mm [2] 770 mm [3] 1,500 mm [4] 1,600 mm [5]	400 mm [6] 170 mm [7] 150 mm [8]	LL3-TB06	5325916
		≥ 0.06 mm	1 mm	✔	160 mm [1] 480 mm [2] 800 mm [3] 1,600 mm [4] 1,700 mm [5]	350 mm [6] 170 mm [7] 150 mm [8]	LL3-TR08	5325984
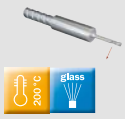		≥ 0.1 mm	50 mm	–	18 mm [1] 30 mm [2] 120 mm [3] 220 mm [4] 420 mm [5]	23 mm [6] 23 mm [7]	LL3-TH07	5325977
		≥ 0.16 mm	25 mm	✔	90 mm [1] 290 mm [2] 480 mm [3] 970 mm [4] 1,000 mm [5]	170 mm [6] 75 mm [7] 110 mm [8]	LL3-TH15	5325975
							LL3-TH16	5325976
		≥ 0.4 mm	25 mm	✔	350 mm [1] 750 mm [2] 1,800 mm [3] 4,000 mm [4] 4,000 mm [5]	400 mm [6] 170 mm [7] 150 mm [8]	LL3-TV05	5322546
					180 mm [1] 550 mm [2] 900 mm [3] 2,100 mm [4] 3,500 mm [5]	350 mm [6] 150 mm [7] 150 mm [8]	LL3-TV06	5322547
			2 mm	✔	340 mm [1] 1,000 mm [2] 1,800 mm [3] 4,000 mm [4] 4,000 mm [5]	290 mm [6] 150 mm [7] 150 mm [8]	LL3-TV07	5322548
	3,000 mm	≥ 0.3 mm	20 mm	✔	460 mm [1] 1,400 mm [2] 2,500 mm [3] 4,000 mm [4] 4,000 mm [5]	1,000 mm [6] 350 mm [7] 450 mm [8]	LL3-TY03	5325982

[1] Operating mode: 16 µs. [2] Operating mode: 70 µs. [3] Operating mode: 250 µs. [4] Operating mode: 2 ms. [5] Operating mode: 8 ms.
[6] Red light: 250 µs. [7] High speed: 50 µs. [8] Green light: 250 µs.

→ **For dimensional drawings, please see page J-847**

J

Flat type

- **Detection principle:** Through-beam system
- **Fiber-optic cable cuttable:** ✔

Figure	Length	Minimal object diameter	Minimum bend radius	Sensing range with WLL180	Sensing range with WLL170	Model name	Part no.
	1,000 mm	≥ 0.08 mm	1 mm	120 mm [1] 350 mm [2] 620 mm [3] 1,250 mm [4] 1,330 mm [5]	250 mm [6] 120 mm [7] 120 mm [8]	LL3-TE01	5325807
				40 mm [1] 140 mm [2] 220 mm [3] 450 mm [4] 480 mm [5]	130 mm [6] 60 mm [7] 50 mm [8]	LL3-TE02	5325910
	2,000 mm	≥ 0.03 mm	1 mm	150 mm [1] 440 mm [2] 700 mm [3] 1,400 mm [4] 1,490 mm [5]	320 mm [6] 160 mm [7] 120 mm [8]	LL3-TE04	5325911
			4 mm	150 mm [1] 460 mm [2] 840 mm [3] 1,680 mm [4] 1,780 mm [5]	350 mm [6] 140 mm [7] 240 mm [8]	LL3-TE05	5325914
				360 mm [1] 1,300 mm [2] 2,300 mm [3] 4,000 mm [4] 4,000 mm [5]	1,200 mm [6] 500 mm [7] 750 mm [8]	LL3-TR05	5325808
				560 mm [1] 1,600 mm [2] 2,200 mm [3] 4,000 mm [4] 4,000 mm [5]	1,200 mm [6] 500 mm [7] 750 mm [8]	LL3-TR06	5325912

[1] Operating mode: 16 µs. [2] Operating mode: 70 µs. [3] Operating mode: 250 µs. [4] Operating mode: 2 ms. [5] Operating mode: 8 ms.
[6] Red light: 250 µs. [7] High speed: 50 µs. [8] Green light: 250 µs.

J

Figure	Length	Minimal object diameter	Minimum bend radius	Sensing range with WLL180	Sensing range with WLL170	Model name	Part no.
	2,000 mm	≥ 0.04 mm	1 mm	250 mm [1] 730 mm [2] 1,280 mm [3] 2,560 mm [4] 2,730 mm [5]	600 mm [6] 300 mm [7] 400 mm [8]	LL3-TR13	5325909
		≥ 0.05 mm	1 mm	600 mm [1] 1,400 mm [2] 2,300 mm [3] 4,000 mm [4] 4,000 mm [5]	1,400 mm [6] 650 mm [7] 600 mm [8]	LL3-TR12	5325907
		≥ 0.08 mm	1 mm	590 mm [1] 1,500 mm [2] 2,200 mm [3] 4,000 mm [4] 4,000 mm [5]	1,800 mm [6] 800 mm [7] 750 mm [8]	LL3-TR11	5325906
				190 mm [1] 580 mm [2] 980 mm [3] 1,970 mm [4] 2,100 mm [5]	500 mm [6] 250 mm [7] 200 mm [8]	LL3-TE03	5325908

[1] Operating mode: 16 µs. [2] Operating mode: 70 µs. [3] Operating mode: 250 µs. [4] Operating mode: 2 ms. [5] Operating mode: 8 ms.
[6] Red light: 250 µs. [7] High speed: 50 µs. [8] Green light: 250 µs.

→ **For dimensional drawings, please see page J-848**

J

Long end sleeve

- **Detection principle:** Through-beam system

Figure	Length	Minimal object diameter	Minimum bend radius	Fiber-optic cable cut-table	Sensing range with WLL180	Sensing range with WLL170	Model name	Part no.
	500 mm	≥ 0.02 mm	5 mm	–	2 mm [1] 8 mm [2] 14 mm [3] 28 mm [4] 30 mm [5]	5 mm [6] 3 mm [7] 3 mm [8]	LL3-TP01	5325925
	2,000 mm	≥ 0.03 mm	25 mm	✔	50 mm [1] 140 mm [2] 250 mm [3] 500 mm [4] 530 mm [5]	120 mm [6] 60 mm [7] 60 mm [8]	LL3-TB05	5325924
		≥ 0.1 mm	15 mm	✔	10 mm [1] 30 mm [2] 60 mm [3] 140 mm [4] 200 mm [5]	32 mm [6] 13 mm [7] 5 mm [8]	LL3-TT01	5308057
					30 mm [1] 130 mm [2] 250 mm [3] 550 mm [4] 800 mm [5]	77 mm [6] 27 mm [7] 16 mm [8]	LL3-TV02	5308059
							LL3-TV04	5308060
		≥ 0.2 mm	25 mm	✔	240 mm [1] 700 mm [2] 1,400 mm [3] 2,500 mm [4] 2,900 mm [5]	470 mm [6] 165 mm [7] 132 mm [8]	LL3-TB03	5308056
					180 mm [1] 600 mm [2] 1,100 mm [3] 2,500 mm [4] 3,300 mm [5]	2,050 mm [6] 950 mm [7] 850 mm [8]	LL3-TK16	5313038
					170 mm [1] 500 mm [2] 1,000 mm [3] 2,300 mm [4] 3,000 mm [5]	355 mm [6] 125 mm [7] 115 mm [8]	LL3-TS08	5308061
					120 mm [1] 400 mm [2] 800 mm [3] 1,800 mm [4] 2,750 mm [5]	325 mm [6] 115 mm [7] 87 mm [8]	LL3-TV01	5308058
		≥ 0.5 mm	25 mm	✔	170 mm [1] 550 mm [2] 1,000 mm [3] 2,300 mm [4] 3,000 mm [5]	1,800 mm [6] 840 mm [7] 760 mm [8]	LL3-TS12	5308062

[1] Operating mode: 16 µs. [2] Operating mode: 70 µs. [3] Operating mode: 250 µs. [4] Operating mode: 2 ms. [5] Operating mode: 8 ms.
[6] Red light: 250 µs. [7] High speed: 50 µs. [8] Green light: 250 µs.

→ **For dimensional drawings, please see page J-846**

J

Area detection

- **Detection principle:** Through-beam system
- **Length:** 2,000 mm
- **Fiber-optic cable cuttable:** ✔

Figure	Minimal object diameter	Minimum bend radius	Sensing range with WLL180	Sensing range with WLL170	Model name	Part no.
	≥ 0.25 mm	1 mm	1,300 mm [1] 2,500 mm [2] 3,000 mm [3] 3,500 mm [4] 4,000 mm [5]	2,000 mm [6] 1,000 mm [7] 800 mm [8]	LL3-TZ09	5326598
		10 mm	1,700 mm [1] 2,500 mm [2] 3,000 mm [3] 3,500 mm [4] 4,000 mm [5]	2,800 mm [6] 1,200 mm [7] 800 mm [8]	LL3-TZ10	5326599
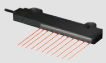	≥ 0.4 mm	2 mm	3,000 mm [1] 4,000 mm [2] 4,000 mm [3] 4,000 mm [4] 4,000 mm [5]	4,000 mm [6] 1,300 mm [7] 1,600 mm [8]	LL3-TS40	5323971
	≥ 0.45 mm	25 mm	150 mm [1] 450 mm [2] 740 mm [3] 1,400 mm [4] 1,500 mm [5]	350 mm [6] 150 mm [7] 250 mm [8]	LL3-TZ05	5325937
			150 mm [1] 480 mm [2] 790 mm [3] 1,500 mm [4] 1,600 mm [5]	350 mm [6] 150 mm [7] 250 mm [8]	LL3-TZ06	5325938
	≥ 0.5 mm	25 mm	130 mm [1] 400 mm [2] 800 mm [3] 2,000 mm [4] 3,500 mm [5]	335 mm [6] 125 mm [7] 90 mm [8]	LL3-TS14	5313039
	≥ 1 mm	25 mm	130 mm [1] 400 mm [2] 800 mm [3] 2,000 mm [4] 3,500 mm [5]	335 mm [6] 125 mm [7] 90 mm [8]	LL3-TS10	5308063

[1] Operating mode: 16 µs. [2] Operating mode: 70 µs. [3] Operating mode: 250 µs. [4] Operating mode: 2 ms. [5] Operating mode: 8 ms.
[6] Red light: 250 µs. [7] High speed: 50 µs. [8] Green light: 250 µs.

J

→ **For dimensional drawings, please see page J-851**

Heat-resistant

- **Detection principle:** Through-beam system

Figure	Length	Minimal object diameter	Minimum bend radius	Fiber-optic cable cut-table	Sensing range with WLL180	Sensing range with WLL170	Model name	Part no.
	1,000 mm	≥ 0.02 mm	10 mm	–	50 mm [1] 180 mm [2] 300 mm [3] 600 mm [4] 640 mm [5]	130 mm [6] 50 mm [7] 80 mm [8]	LL3-TH10	5325970
		≥ 0.04 mm	25 mm	–	130 mm [1] 400 mm [2] 700 mm [3] 1,400 mm [4] 1,500 mm [5]	320 mm [6] 130 mm [7] 200 mm [8]	LL3-TH11	5325971
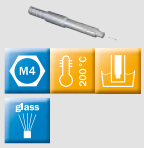					80 mm [1] 230 mm [2] 350 mm [3] 560 mm [4] 980 mm [5]	–	LL3-TW01	5315233
	2,000 mm	≥ 0.04 mm	25 mm	–	150 mm [1] 480 mm [2] 790 mm [3] 1,500 mm [4] 1,600 mm [5]	350 mm [6] 140 mm [7] 240 mm [8]	LL3-TH08	5325978
					140 mm [1] 460 mm [2] 700 mm [3] 1,400 mm [4] 1,500 mm [5]	350 mm [6] 140 mm [7] 240 mm [8]	LL3-TH09	5325979
		≥ 0.06 mm	25 mm	✔	230 mm [1] 690 mm [2] 1,100 mm [3] 2,300 mm [4] 2,400 mm [5]	600 mm [6] 250 mm [7] 400 mm [8]	LL3-TH17	5325967
		≥ 0.12 mm	25 mm	✔	100 mm [1] 330 mm [2] 570 mm [3] 1,100 mm [4] 1,200 mm [5]	250 mm [6] 100 mm [7] 170 mm [8]	LL3-TH12	5325972
							LL3-TH13	5325973
							LL3-TH14	5325974
		≥ 0.2 mm	25 mm	✔	55 mm [1] 180 mm [2] 320 mm [3] 680 mm [4] 1,000 mm [5]	305 mm [6] 125 mm [7] 50 mm [8]	LL3-TH01	5308064
		≥ 0.5 mm	35 mm	✔	230 mm [1] 700 mm [2] 1,300 mm [3] 2,700 mm [4] 4,000 mm [5]	620 mm [6] 255 mm [7] 125 mm [8]	LL3-TH02	5308065

[1] Operating mode: 16 µs. [2] Operating mode: 70 µs. [3] Operating mode: 250 µs. [4] Operating mode: 2 ms. [5] Operating mode: 8 ms.
[6] Red light: 250 µs. [7] High speed: 50 µs. [8] Green light: 250 µs.

→ **For dimensional drawings, please see page J-852**

J

LCDs/transparent objects/semiconductors

- **Detection principle:** Through-beam system
- **Length:** 2,000 mm
- **Fiber-optic cable cuttable:** ✔

Figure	Minimal object diameter	Minimum bend radius	Sensing range with WLL180	Sensing range with WLL170	Model name	Part no.
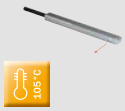	≥ 0.02 mm	10 mm	100 mm [1] 290 mm [2] 500 mm [3] 1,000 mm [4] 1,100 mm [5]	250 mm [6] 120 mm [7] 120 mm [8]	LL3-TG04	5324499
	≥ 0.05 mm	10 mm	220 mm [1] 760 mm [2] 1,500 mm [3] 2,900 mm [4] 4,000 mm [5]	625 mm [6] 400 mm [7] 300 mm [8]	LL3-TS22M	5325968
		25 mm	390 mm [1] 1,300 mm [2] 2,600 mm [3] 4,000 mm [4] 4,000 mm [5]	850 mm [6] 500 mm [7] 400 mm [8]	LL3-TS22	5325944
	≥ 0.06 mm	1 mm	580 mm [1] 1,670 mm [2] 2,400 mm [3] 4,000 mm [4] 4,000 mm [5]	1,100 mm [6] 450 mm [7] 700 mm [8]	LL3-TG02	5325943
		25 mm	880 mm [1] 2,300 mm [2] 3,500 mm [3] 4,000 mm [4] 4,000 mm [5]	2,500 mm [6] 1,300 mm [7] 1,600 mm [8]	LL3-TG01	5325940
			570 mm [1] 1,980 mm [2] 2,400 mm [3] 4,000 mm [4] 4,000 mm [5]	1,000 mm [6] 450 mm [7] 700 mm [8]	LL3-TG03	5325942

[1] Operating mode: 16 µs. [2] Operating mode: 70 µs. [3] Operating mode: 250 µs. [4] Operating mode: 2 ms. [5] Operating mode: 8 ms.
[6] Red light: 250 µs. [7] High speed: 50 µs. [8] Green light: 250 µs.

→ **For dimensional drawings, please see page J-854**

J

Resistant to oil/chemicals

- **Detection principle:** Through-beam system

Figure	Length	Minimal object diameter	Minimum bend radius	Fiber-optic cable cut-table	Sensing range with WLL180	Sensing range with WLL170	Model name	Part no.
	2,000 mm	≥ 0.3 mm	60 mm	–	400 mm [1] 1,200 mm [2] 2,100 mm [3] 4,000 mm [4] 4,000 mm [5]	2,000 mm [6] 415 mm [7] 390 mm [8]	LL3-TY01	5308066
					300 mm [1] 1,000 mm [2] 1,300 mm [3] 3,000 mm [4] 4,000 mm [5]	620 mm [6] 225 mm [7] 210 mm [8]	LL3-TY02	5308067
		≥ 4 mm	25 mm	✔	850 mm [1] 2,700 mm [2] 3,000 mm [3] 4,000 mm [4] 4,000 mm [5]	2,200 mm [6] 800 mm [7] 1,300 mm [8]	LL3-TY05	5325980
	2,500 mm	≥ 0.3 mm	30 mm	✔	740 mm [1] 2,400 mm [2] 3,000 mm [3] 4,000 mm [4] 4,000 mm [5]	2,200 mm [6] 800 mm [7] 1,300 mm [8]	LL3-TY04	5325981

[1] Operating mode: 16 µs. [2] Operating mode: 70 µs. [3] Operating mode: 250 µs. [4] Operating mode: 2 ms. [5] Operating mode: 8 ms.
[6] Red light: 250 µs. [7] High speed: 50 µs. [8] Green light: 250 µs.

→ **For dimensional drawings, please see page J-854**

Liquid level

- **Detection principle:** Through-beam system

Figure	Length	Minimum bend radius	Model name	Part no.
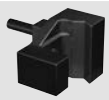	2,000 mm	20 mm	LL3-TF01	5324242

→ **For dimensional drawings, please see page J-855**

J

Tip adapters through-beam system

Suitable for amplifier WLL170-2

Figure	Tempera-ture	LL model name/sensing range (mm)											
		LL3-TB01		LL3-TB01-10		LL3-TB01-30		LL3-TB02		LL3-TB06		LL3-TH01	
	-40 °C – +100 °C	▬ ▬ ■	3000 [1] 1200 [2] 1100 [3]	▬ ▬ ■	1800 [1] 700 [2] 600 [3]	▬ ▬ ■	1000 [1] 400 [2] 200 [3]	▬ ▬ ■	3500 [1] 1400 [2] 1200 [3]	▬ ▬ ■	3500 [1] 1400 [2] 1200 [3]	▬ ▬ ■	3500 [1] 1400 [2] 1200 [3]
	-40 °C – +100 °C	▬ ▬ ■	3000 [1] 1200 [2] 800 [3]	▬ ▬ ■	1800 [1] 700 [2] 500 [3]	▬ ▬ ■	1000 [1] 400 [2] 200 [3]	▬ ▬ ■	3500 [1] 1400 [2] 1000 [3]	▬ ▬ ■	3500 [1] 1400 [2] 1000 [3]	▬ ▬ ■	3500 [1] 1400 [2] 1000 [3]
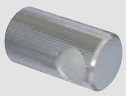	-40 °C – +70 °C	▬ ▬ ■	600 [1] 230 [2] 100 [3]	▬ ■	360 [1] 130 [2]	▬ ■	200 [1] 80 [2]	▬ ▬ ■	600 [1] 230 [2] 100 [3]		–		–
	-40 °C – +350 °C	▬ ▬ ■	3500 [1] 1400 [2] 1000 [3]	▬ ▬ ■	2100 [1] 850 [2] 600 [3]	▬ ▬ ■	1200 [1] 500 [2] 200 [3]	▬ ▬ ■	3500 [1] 1400 [2] 1000 [3]	▬ ▬ ■	3500 [1] 1400 [2] 1000 [3]	▬ ▬ ■	3500 [1] 1400 [2] 1000 [3]
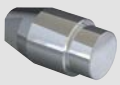	-60 °C – +350 °C	▬ ▬ ■	3500 [1] 1400 [2] 1000 [3]	▬ ▬ ■	2100 [1] 850 [2] 600 [3]	▬ ▬ ■	1200 [1] 500 [2] 200 [3]	▬ ▬ ■	3500 [1] 1400 [2] 1000 [3]	▬ ▬ ■	3500 [1] 1400 [2] 1000 [3]	▬ ▬ ■	3500 [1] 1400 [2] 1000 [3]
	-60 °C – +300 °C	▬ ■	500 [1] 200 [2]	▬ ■	300 [1] 100 [2]	▬ ■	180 [1] 70 [2]	▬ ■	500 [1] 200 [2] 80 [3]		–	▬ ■	400 [1] 150 [2]

[1] Red light: 250 µs [2] Highspeed: 50 µs [3] Green light: 250 µs
Mounting material included.

Suitable for amplifier WLL180T

Figure	Tempera-ture	LL model name/sensing range (mm)											
		LL3-TB01		LL3-TB01-10		LL3-TB01-30		LL3-TB02		LL3-TB06		LL3-TH01	
	-40 °C – +100 °C	■ ▬ ▬ ▬ ▬	800 [1] 2500 [2] 4000 [3] 4000 [4] 4000 [5]	■ ▬ ▬ ▬ ▬	720 [1] 2250 [2] 3600 [3] 3600 [4] 3600 [5]	■ ▬ ▬ ▬ ▬	570 [1] 1800 [2] 2880 [3] 2880 [4] 2880 [5]	▬ ▬ ▬ ▬ ▬	1800 [1] 4000 [2] 4000 [3] 4000 [4] 4000 [5]	▬ ▬ ▬ ▬ ▬	1500 [1] 4000 [2] 4000 [3] 4000 [4] 4000 [5]	■ ▬ ▬ ▬ ▬	500 [1] 1400 [2] 2500 [3] 4000 [4] 4000 [5]
	-40 °C – +100 °C	■ ▬ ▬ ▬ ▬	800 [1] 2500 [2] 4000 [3] 4000 [4] 4000 [5]	■ ▬ ▬ ▬ ▬	720 [1] 2250 [2] 3600 [3] 3600 [4] 3600 [5]	■ ▬ ▬ ▬ ▬	570 [1] 1800 [2] 2880 [3] 2880 [4] 2880 [5]	▬ ▬ ▬ ▬ ▬	1800 [1] 4000 [2] 4000 [3] 4000 [4] 4000 [5]	▬ ▬ ▬ ▬ ▬	1500 [1] 4000 [2] 4000 [3] 4000 [4] 4000 [5]	■ ▬ ▬ ▬ ▬	500 [1] 1400 [2] 2500 [3] 4000 [4] 4000 [5]
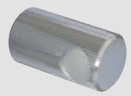	-40 °C – +70 °C	■ ■ ▬ ▬ ▬	200 [1] 650 [2] 1200 [3] 2500 [4] 3600 [5]	■ ■ ▬ ▬ ▬	180 [1] 585 [2] 1080 [3] 2250 [4] 3240 [5]	■ ■ ▬ ▬ ▬	150 [1] 460 [2] 860 [3] 1800 [4] 2600 [5]	■ ■ ▬ ▬ ▬	300 [1] 1000 [2] 1800 [3] 3500 [4] 4000 [5]		–		–
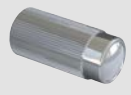	-40 °C – +350 °C	■ ▬ ▬ ▬ ▬	360 [1] 2000 [2] 4000 [3] 4000 [4] 4000 [5]	■ ▬ ▬ ▬ ▬	324 [1] 1800 [2] 3600 [3] 3600 [4] 3600 [5]	■ ▬ ▬ ▬ ▬	260 [1] 1440 [2] 2880 [3] 2880 [4] 2880 [5]	▬ ▬ ▬ ▬ ▬	1200 [1] 4000 [2] 4000 [3] 4000 [4] 4000 [5]	▬ ▬ ▬ ▬ ▬	1200 [1] 4000 [2] 4000 [3] 4000 [4] 4000 [5]	▬ ▬ ▬ ▬ ▬	1200 [1] 2000 [2] 4000 [3] 4000 [4] 4000 [5]
	-60 °C – +350 °C	▬ ▬ ▬ ▬ ▬	4000 [1] 4000 [2] 4000 [3] 4000 [4] 4000 [5]	▬ ▬ ▬ ▬ ▬	3600 [1] 3600 [2] 3600 [3] 3600 [4] 3600 [5]	▬ ▬ ▬ ▬ ▬	2880 [1] 2880 [2] 2880 [3] 2880 [4] 2880 [5]	▬ ▬ ▬ ▬ ▬	4000 [1] 4000 [2] 4000 [3] 4000 [4] 4000 [5]	▬ ▬ ▬ ▬ ▬	4000 [1] 4000 [2] 4000 [3] 4000 [4] 4000 [5]	▬ ▬ ▬ ▬ ▬	4000 [1] 4000 [2] 4000 [3] 4000 [4] 4000 [5]

[1] Operating mode: 16 µs [2] Operating mode: 70 µs [3] Operating mode: 250 µs [4] Operating mode: 2 ms [5] Operating mode: 8 ms
Mounting material included.

J

LL model name/sensing range (mm)												Model name	Part no.
LL3-TH08		LL3-TH10		LL3-TH11		LL3-TJ01		LL3-TK77		LL3-TR01			
	–		–		–	▬	1500 [1]	▬	3500 [1]	▬	3000 [1]	LL3-TA01	5308128
						▬	600 [2]	▬	1400 [2]	▬	1200 [2]		
						■	400 [3]	■	1200 [3]	■	1000 [3]		
	–		–		–	▬	1500 [1]	▬	3500 [1]	▬	3000 [1]	LL3-TA01S	5326461
						▬	600 [2]	▬	1400 [2]	▬	1200 [2]		
						■	400 [3]	■	1100 [3]	■	1100 [3]		
	–		–		–	▬	500 [1]	▬	600 [1]	▬	500 [1]	LL3-TA02	5308129
						■	200 [2]	■	230 [2]	■	200 [2]		
▬	2100 [1]	▬	1500 [1]	▬	1500 [1]	▬	1500 [1]	▬	3500 [1]	▬	2500 [1]	LL3-TA03	5326462
▬	850 [2]	▬	600 [2]	▬	600 [2]	▬	600 [2]	▬	1400 [2]	▬	1000 [2]		
■	500 [3]	■	300 [3]	■	300 [3]	■	300 [3]	■	1000 [3]	■	700 [3]		
▬	3500 [1]	▬	1500 [1]	▬	1500 [1]	▬	1500 [1]	▬	3500 [1]	▬	3500 [1]	LL3-TA04	5326463
▬	1400 [2]	▬	600 [2]	▬	600 [2]	▬	600 [2]	▬	1400 [2]	▬	1400 [2]		
■	1000 [3]	■	300 [3]	■	250 [3]	■	250 [3]	■	1000 [3]	■	1100 [3]		
▬	350 [1]	▬	300 [1]	▬	350 [1]	▬	400 [1]	▬	400 [1]	▬	350 [1]	LL3-TA05	5326464
	140 [2]		120 [2]		140 [2]		160 [2]		160 [2]		140 [2]		
■		■		■		■		■		■			

LL model name/sensing range (mm)												Model name	Part no.
LL3-TH08		LL3-TH10		LL3-TH11		LL3-TJ01		LL3-TK77		LL3-TR01			
	–		–		–	■	750 [1]	▬	2000 [1]	▬	1800 [1]	LL3-TA01	5308128
						▬	2000 [2]	▬	4000 [2]	▬	4000 [2]		
						▬	2000 [3]	▬	4000 [3]	▬	4000 [3]		
						▬	2000 [4]	▬	4000 [4]	▬	4000 [4]		
						▬	2000 [5]	▬	4000 [5]	▬	4000 [5]		
	–		–		–	■	650 [1]	▬	2000 [1]	▬	1800 [1]	LL3-TA01S	5326461
						▬	2000 [2]	▬	4000 [2]	▬	4000 [2]		
						▬	2000 [3]	▬	4000 [3]	▬	4000 [3]		
						▬	2000 [4]	▬	4000 [4]	▬	4000 [4]		
						▬	2000 [5]	▬	4000 [5]	▬	4000 [5]		
	–		–		–	■	200 [1]	■	300 [1]	■	200 [1]	LL3-TA02	5308129
						■	600 [2]	■	950 [2]	■	900 [2]		
						▬	950 [3]	▬	1800 [3]	▬	1500 [3]		
						▬	1900 [4]	▬	3500 [4]	▬	3300 [4]		
						▬	4000 [5]	▬	4000 [5]	▬	4000 [5]		
■	800 [1]	■	750 [1]	■	1000 [1]	■	600 [1]	■	600 [1]	■	800 [1]	LL3-TA03	5326462
▬	2000 [2]	▬	2000 [2]	▬	2000 [2]	▬	2000 [2]	▬	2000 [2]	▬	2000 [2]		
▬	4000 [3]	▬	2000 [3]	▬	2000 [3]	▬	2000 [3]	▬	4000 [3]	▬	4000 [3]		
▬	4000 [4]	▬	2000 [4]	▬	2000 [4]	▬	2000 [4]	▬	4000 [4]	▬	4000 [4]		
▬	4000 [5]	▬	2000 [5]	▬	2000 [5]	▬	2000 [5]	▬	4000 [5]	▬	4000 [5]		
▬	4000 [1]	▬	2000 [1]	▬	2000 [1]	▬	2000 [1]	▬	4000 [1]	▬	4000 [1]	LL3-TA04	5326463
▬	4000 [2]	▬	2000 [2]	▬	2000 [2]	▬	2000 [2]	▬	4000 [2]	▬	4000 [2]		
▬	4000 [3]	▬	2000 [3]	▬	2000 [3]	▬	2000 [3]	▬	4000 [3]	▬	4000 [3]		
▬	4000 [4]	▬	2000 [4]	▬	2000 [4]	▬	2000 [4]	▬	4000 [4]	▬	4000 [4]		
▬	4000 [5]	▬	2000 [5]	▬	2000 [5]	▬	2000 [5]	▬	4000 [5]	▬	4000 [5]		

J

Figure	Tempera-ture	LL model name/sensing range (mm)											
		LL3-TB01		LL3-TB01-10		LL3-TB01-30		LL3-TB02		LL3-TB06		LL3-TH01	
	-60 °C – +300 °C	▪	250 [1]	▪	225 [1]	▪	180 [1]	▪	250 [1]		–	▪	160 [1]
		▪	800 [2]	▪	720 [2]	▪	570 [2]	▪	800 [2]			▪	450 [2]
		▬	1200 [3]	▬	1080 [3])	▬	860 [3]	▬	1200 [3]			▬	800 [3]
		▬	2400 [4]	▬	2160 [4]	▬	1700 [4]	▬	2400 [4]			▬	1500 [4]
		▬	4000 [5]	▬	3600 [5]	▬	2880 [5]	▬	4000 [5]			▬	4000 [5]

[1] Operating mode: 16 µs [2] Operating mode: 70 µs [3] Operating mode: 250 µs [4] Operating mode: 2 ms [5] Operating mode: 8 ms
Mounting material included.

→ **For dimensional drawings, please see page J-855**

J

	LL model name/sensing range (mm)												Model name	Part no.
	LL3-TH08		LL3-TH10		LL3-TH11		LL3-TJ01		LL3-TK77		LL3-TR01			
	▪	170 [1]	▪	100 [1]	▪	150 [1]	▪	200 [1]	▪	200 [1]	▪	160 [1]	LL3-TA05	5326464
	■	550 [2]	■	300 [2]	■	400 [2]	■	600 [2]	■	600 [2]	■	550 [2]		
	▬	800 [3]	▬	600 [3]	▬	700 [3]	▬	950 [3]	▬	950 [3]	▬	850 [3]		
	▬	1600 [4]	▬	1100 [4]	▬	1400 [4]	▬	1900 [4]	▬	1900 [4]	▬	1700 [4]		
	▬	4000 [5]	▬	2000 [5]	▬	4000 [5]	▬	4000 [5]	▬	4000 [5]	▬	4000 [5]		

J

Tip adapters proximity system

Figure	Temperature	Light spot size			Focal length [mm]	Model name	Part no.
		LL3-DK21	LL3-DT01	LL3-DM02			
	- 40 °C – +70 °C	Ø 0.2 mm	Ø 0.4 mm	–	6	LL3-DA01	5308127
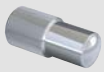	- 40 °C – + 70 °C	Ø 1.2 mm	Ø 1.4 mm	–	15	LL3-DA02	5308130
	- 20 °C – + 60 °C	Ø 0.2 mm	Ø 0.4 mm	–	7	LL3-DA03	5326465
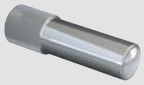	- 40 °C – + 70 °C	Ø 0.3 mm	Ø 0.5 mm	–	7,5	LL3-DA04	5326466
	- 40 °C – + 70 °C	–	–	Ø 0.5 mm	6	LL3-DA05	5326467
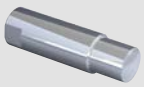	- 40 °C – + 70 °C	–	–	Ø 0.7 mm – 0.85 mm	~ 20	LL3-DA06	5326468
	- 40 °C – + 70 °C	–	–	Ø 0.5 mm – 0.8 mm	~ 14	LL3-DA07	5326469

→ **For dimensional drawings, please see page J-855**

J

Dimensional drawings

Dimensions in mm (inch)

Threaded sleeve

- **Detection principle:** Proximity system

LL3-DJ01

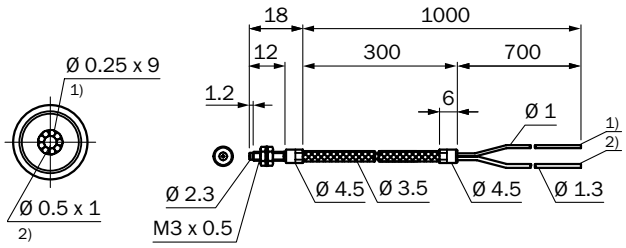

1) Receiver
2) Sender

LL3-DJ02

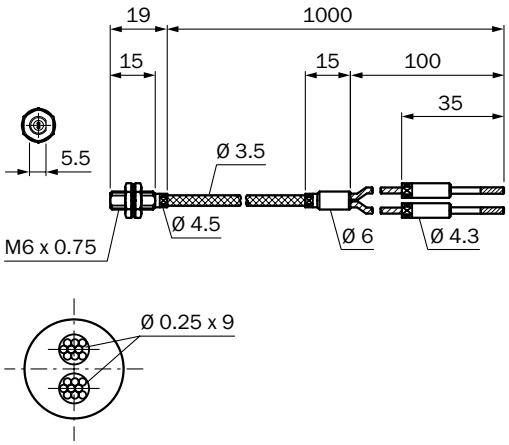

LL3-DR02

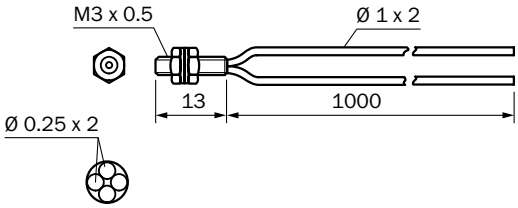

LL3-DR06

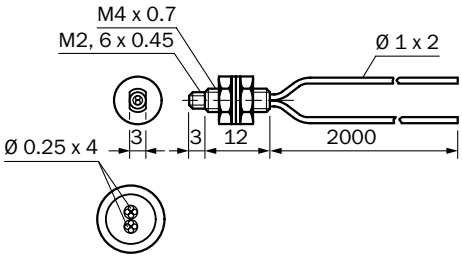

LL3-DS06

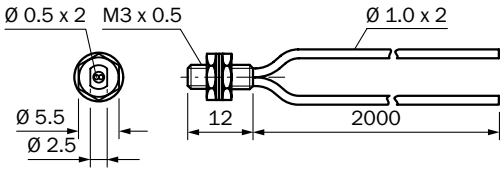

LL3-DT01

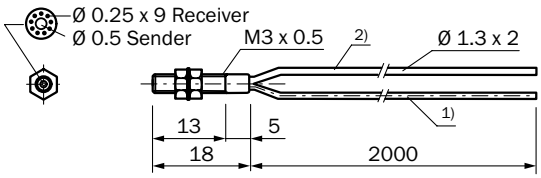

1) Sender
2) Receiver

LL3-DB01

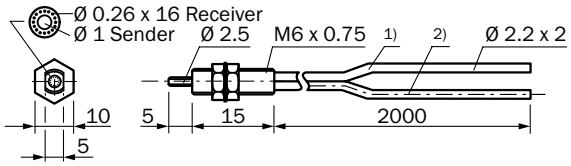

1) Receiver
2) Sender

LL3-DB03

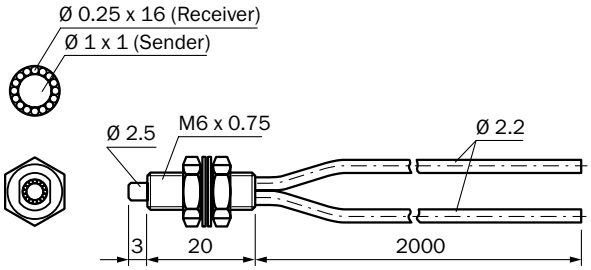

J

LL3-DB04

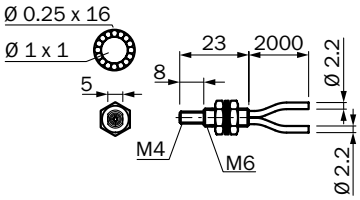

LL3-DK06

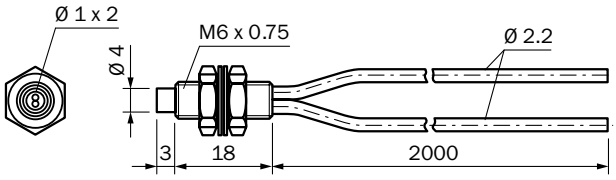

LL3-DK66

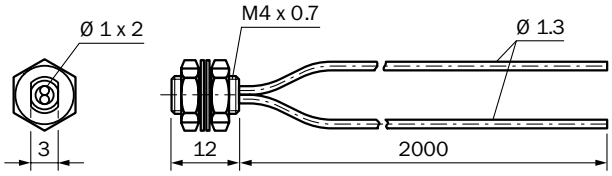

LL3-DK67

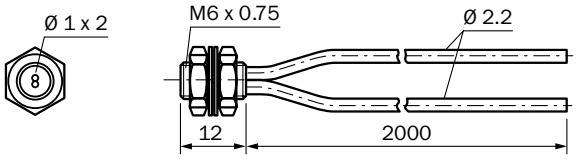

LL3-DR01

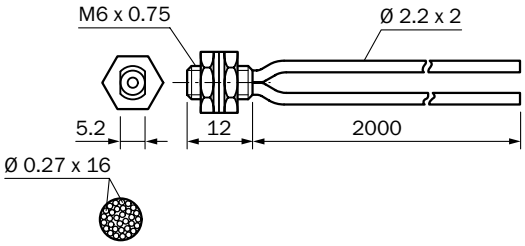

LL3-DR08

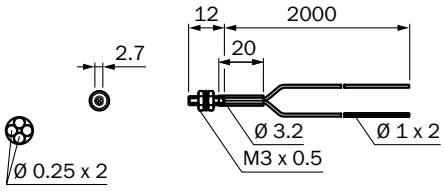

LL3-DK21

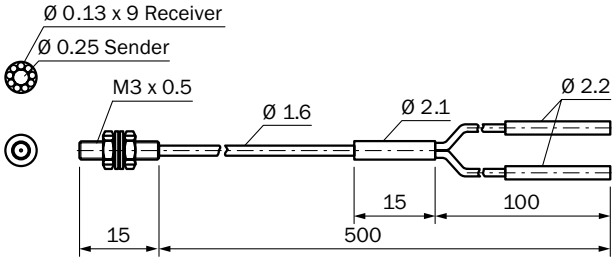

LL3-DM02

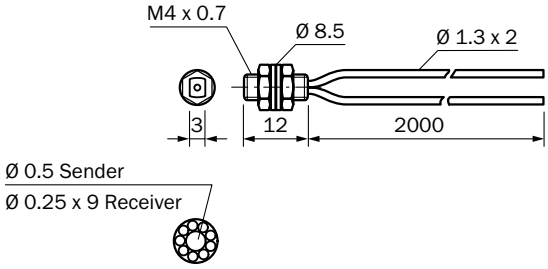

LL3-DB07

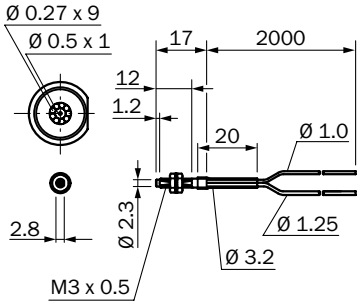

LL3-DM01

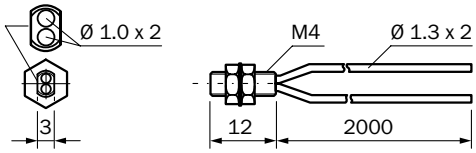

J

Smooth sleeve

- **Detection principle:** Proximity system

LL3-DR04

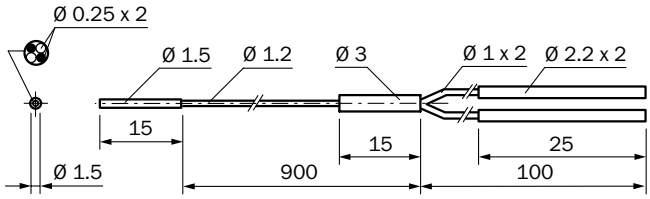

LL3-DP01

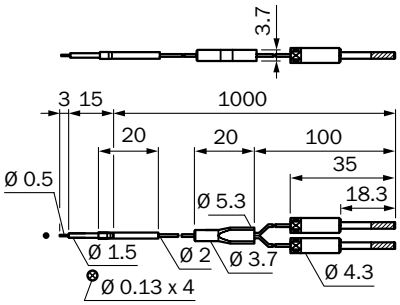

LL3-DK4Z

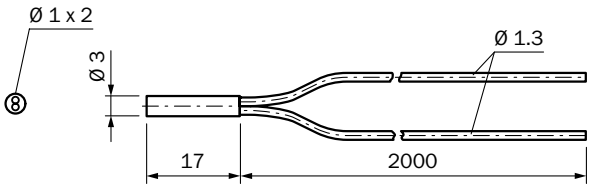

LL3-DR03

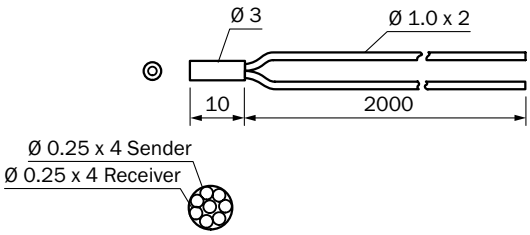

LL3-DT03

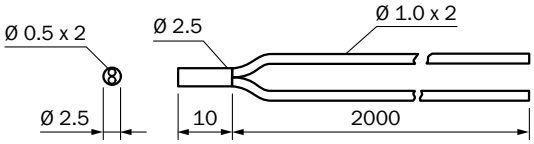

LL3-DK04

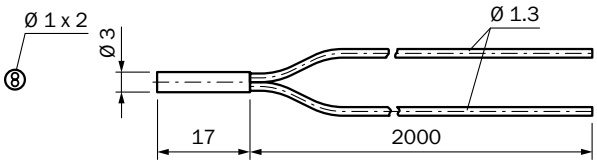

LL3-DR12

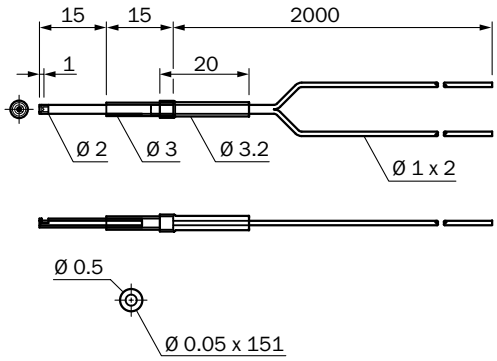

LL3-DR11

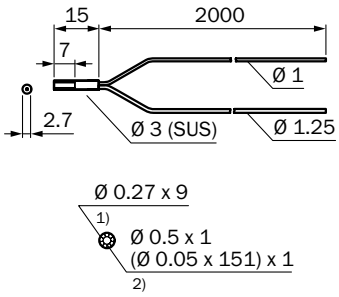

1) Receiver
2) Sender

LL3-DB10

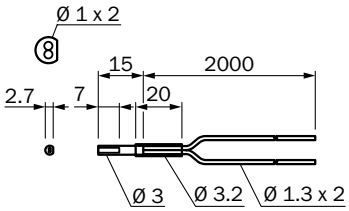

J

90° deflection

- **Detection principle:** Proximity system

LL3-DV05, LL3-DV06, LL3-DV07

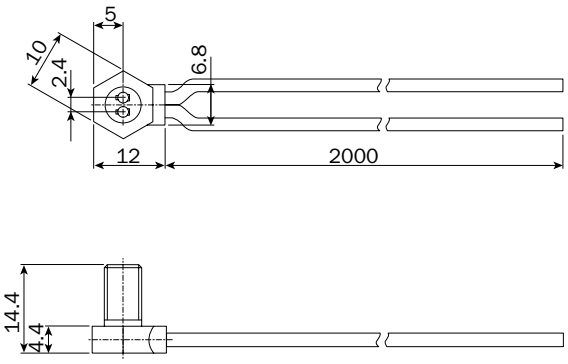

LL3-DB09

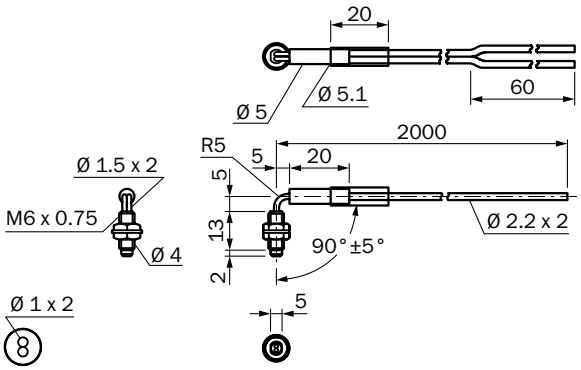

Flat type

- **Detection principle:** Proximity system

LL3-DE02

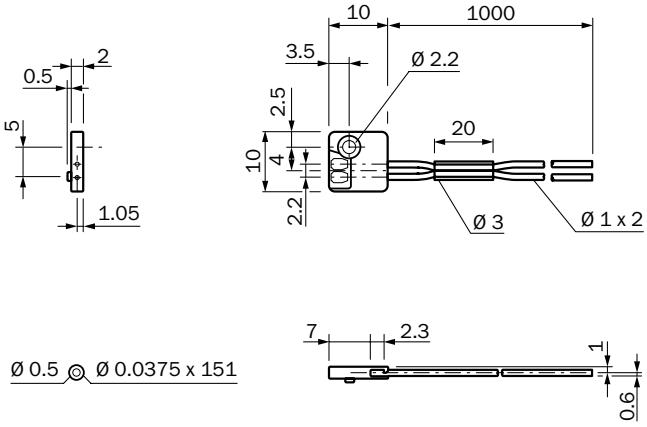

LL3-DE01

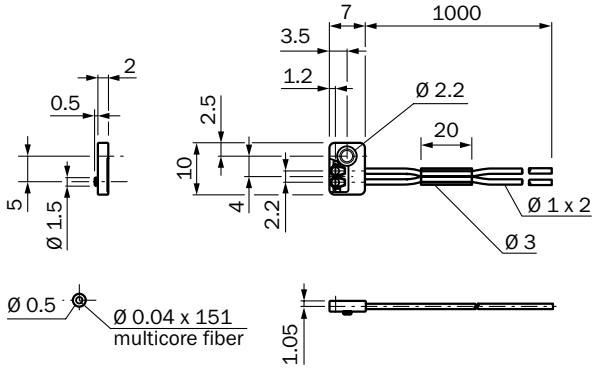

LL3-DC08

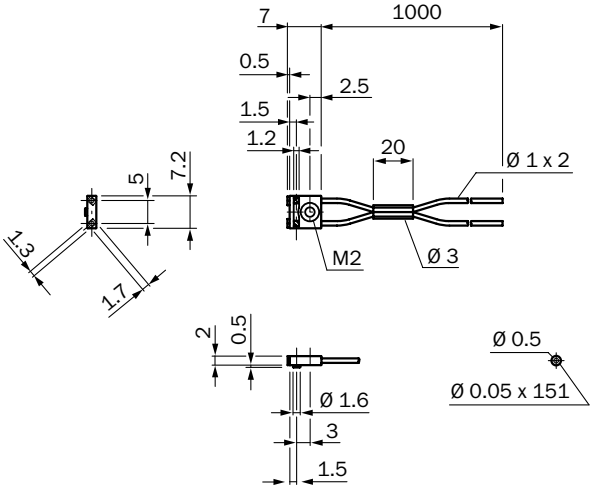

LL3-DC06

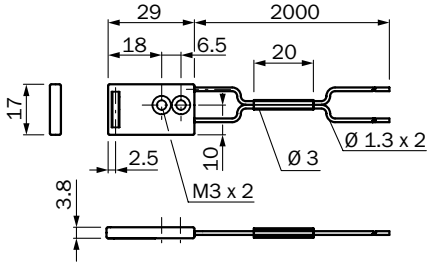

J

LL3-DC47

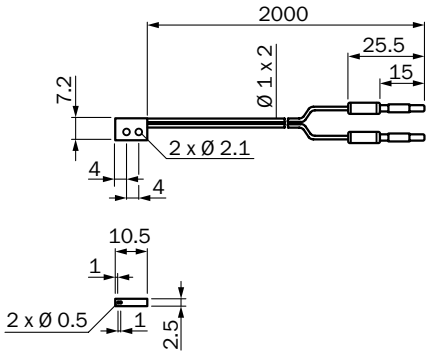

LL3-DC57

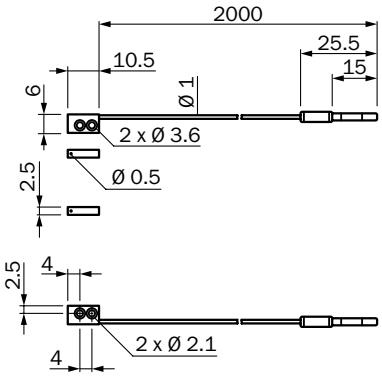

LL3-DC09

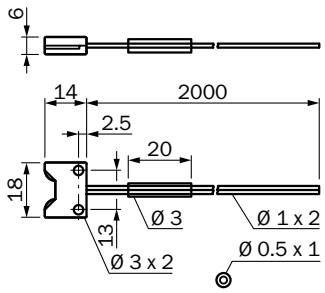

LL3-DH06

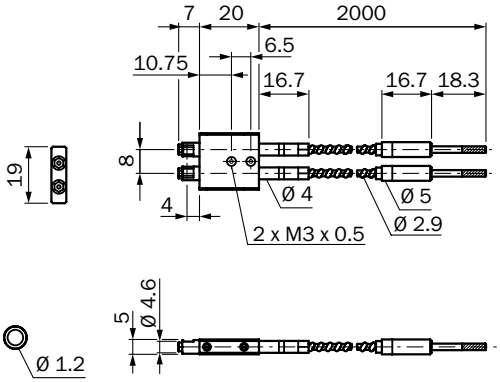

LL3-DH08

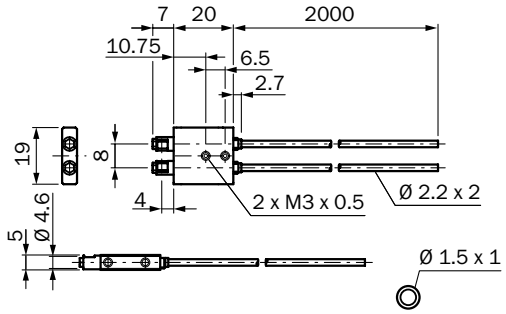

LL3-DE03

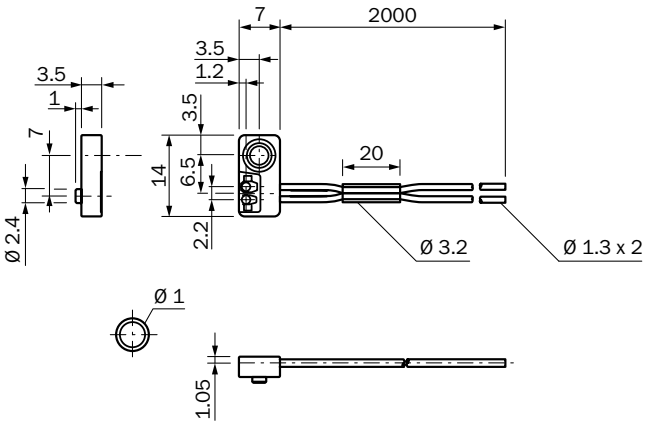

LL3-DE04

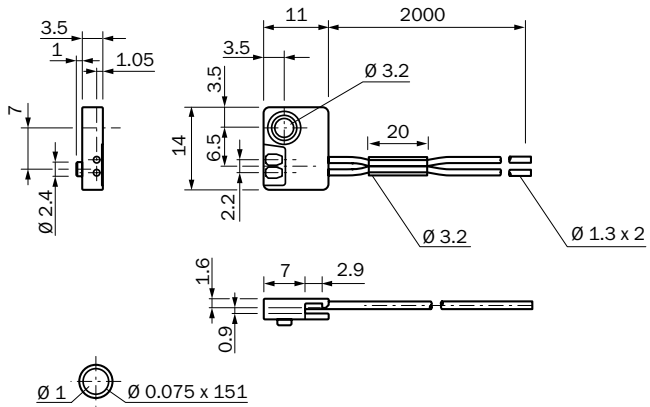

LL3-DR09

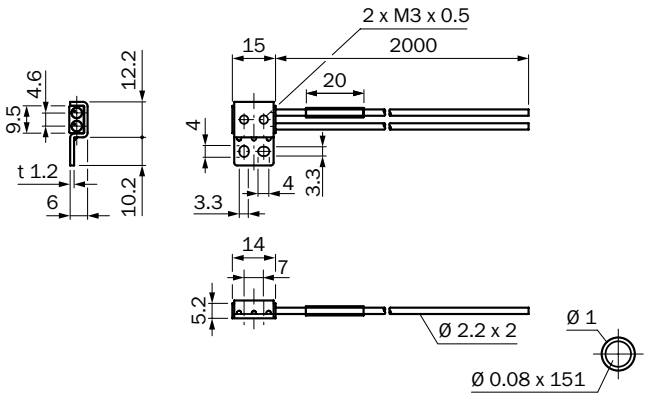

J

LL3-DC07

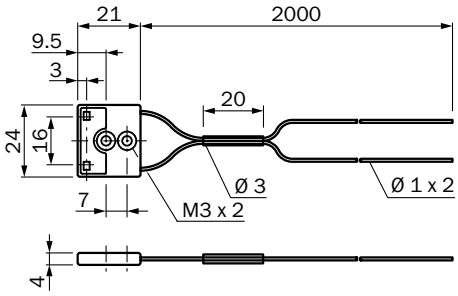

LL3-DC04

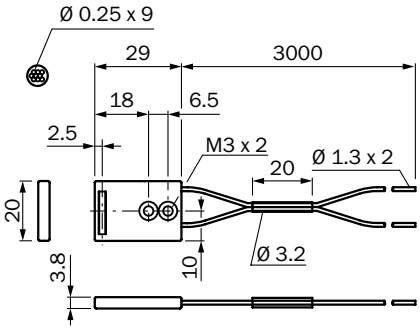

LL3-DH11

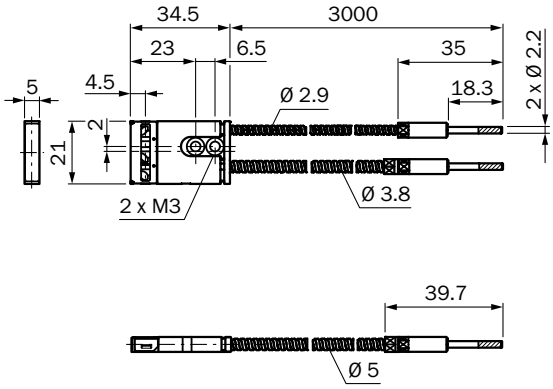

LL3-DH10

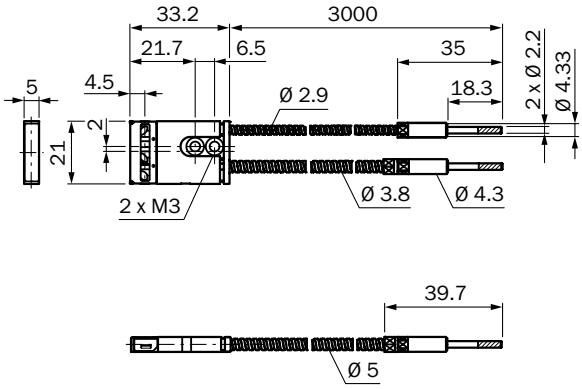

LL3-DC03

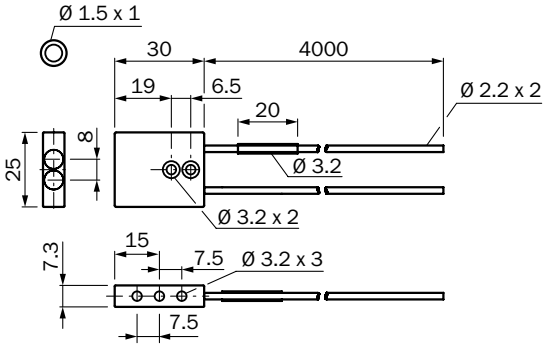

J

Long end sleeve

- **Detection principle:** Proximity system

LL3-DT02

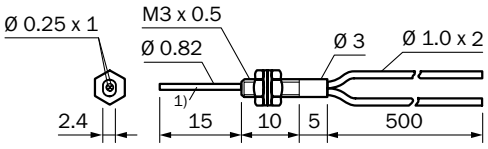

1) End tip cannot be bent

LL3-DT04

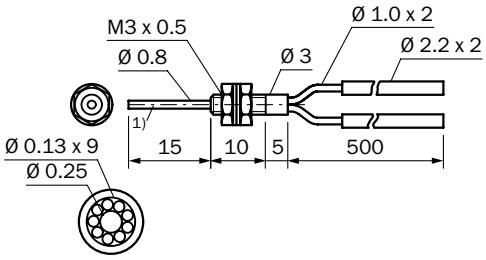

1) End tip cannot be bent

LL3-DR05

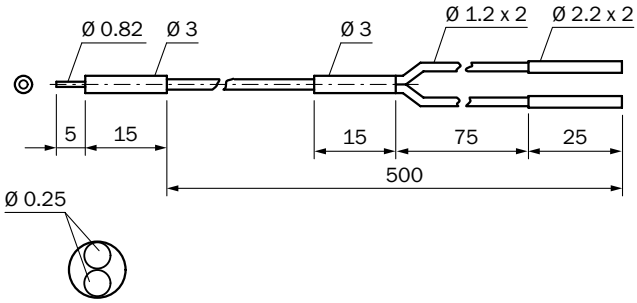

LL3-DR07

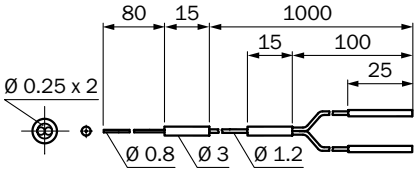

LL3-DB05

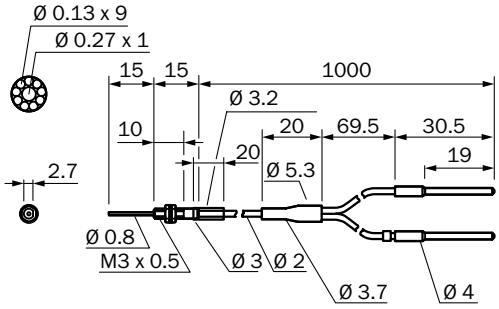

LL3-DH05

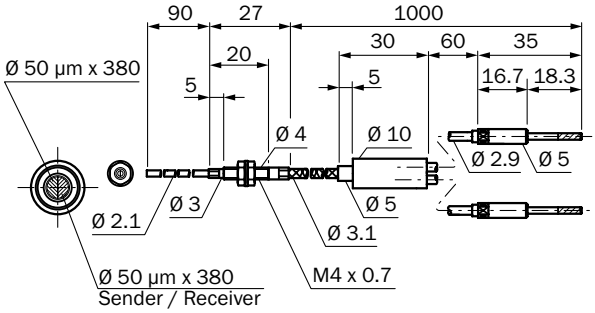

LL3-DK63Z

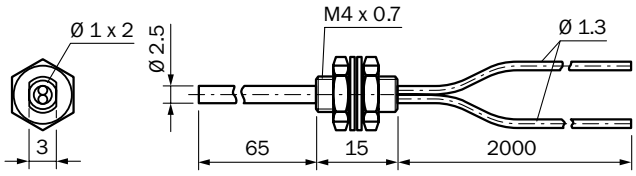

LL3-DK43

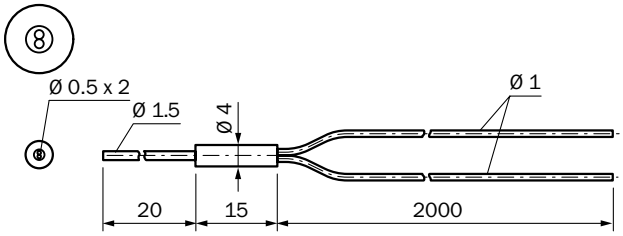

J

LL3-DM03

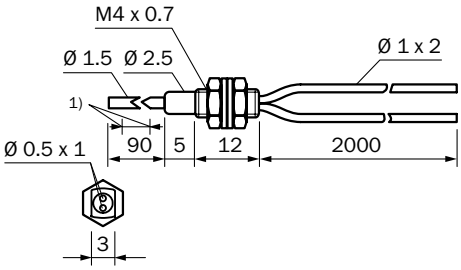

1) Flexible end tip, do not bend in this area (10 mm), bend radius R10 mm

LL3-DT05

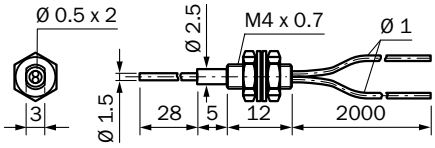

LL3-DV02

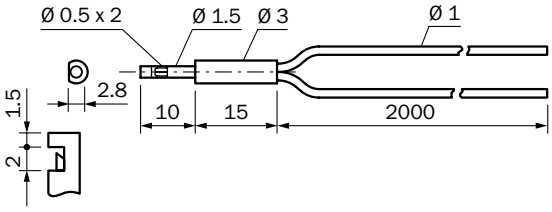

LL3-DB02

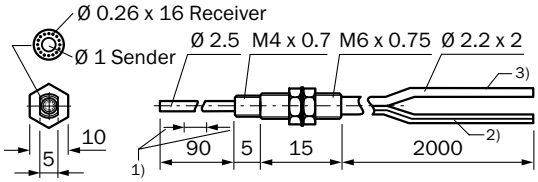

1) Flexible end tip, do not bend in this area (10 mm), bend radius R10 mm
2) Sender (marked blue)
3) Receiver

LL3-DR10

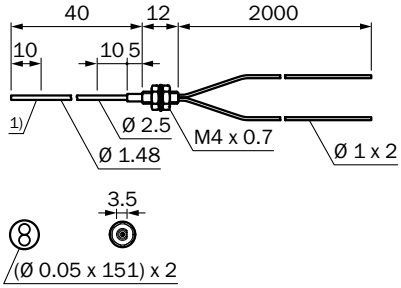

1) bendable

LL3-DB06

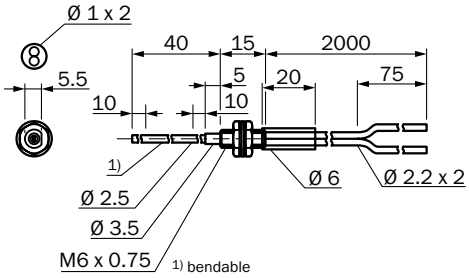

LL3-DB08

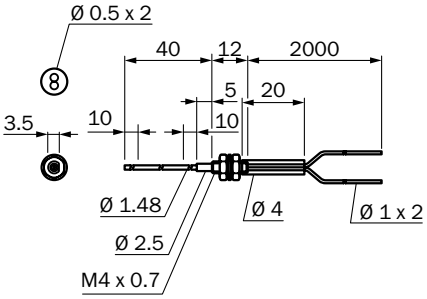

LL3-DH04

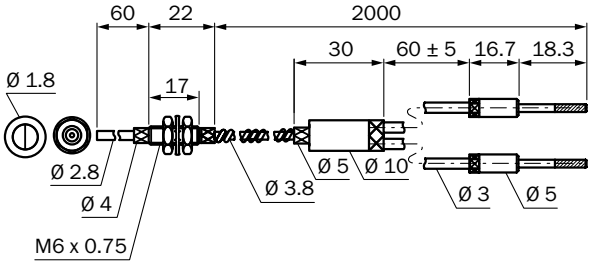

J

LL3-DK33

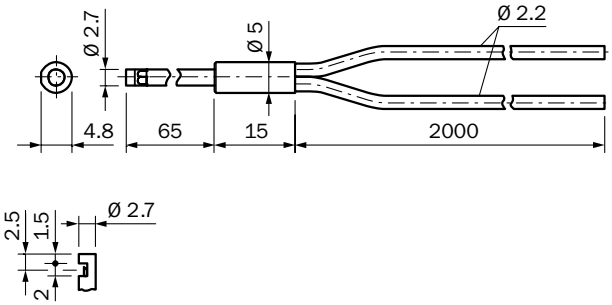

LL3-DV01

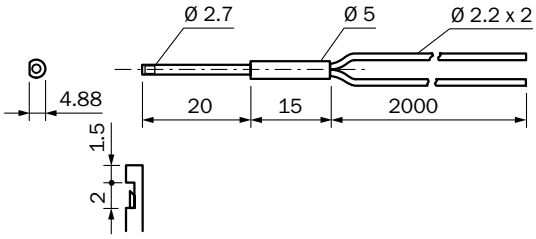

LL3-DV03

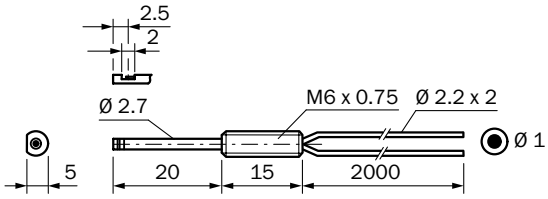

Area detection

- **Detection principle:** Proximity system

LL3-DZ01

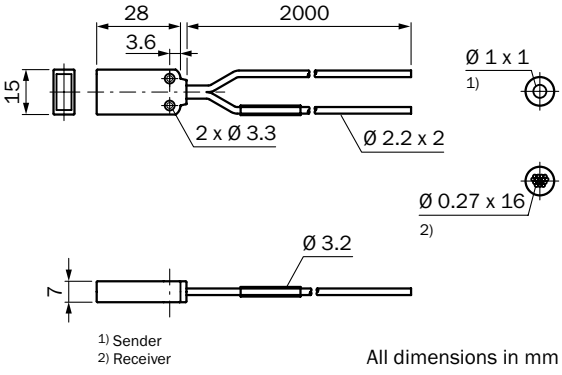

All dimensions in mm

LL3-DZ02

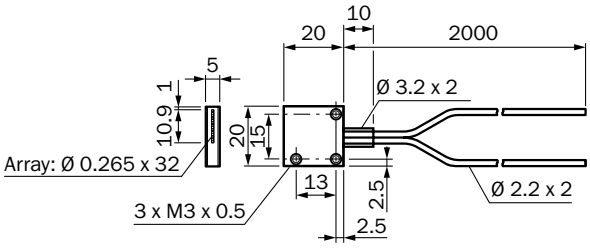

All dimensions in mm

LL3-DZ03

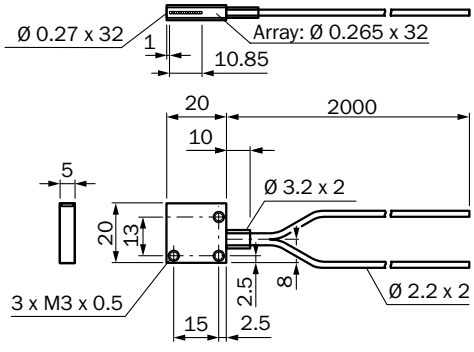

All dimensions in mm

J

Heat-resistant

- **Detection principle:** Proximity system

LL3-DH07

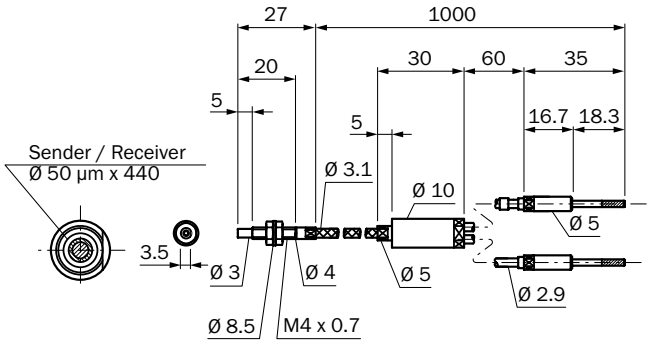

LL3-DW01

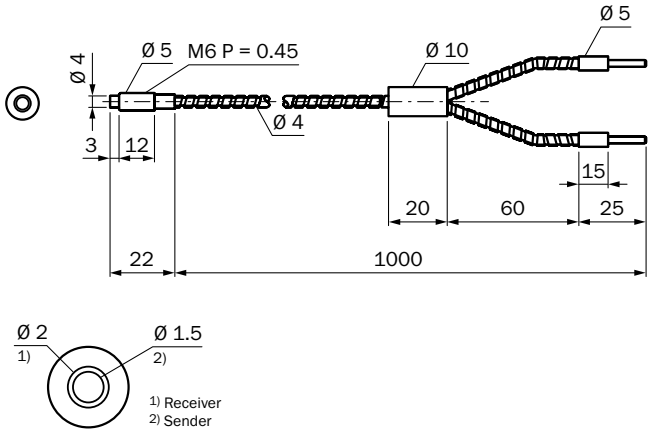

LL3-DH02

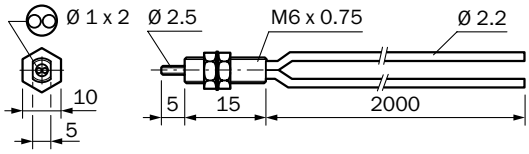

LL3-DH01

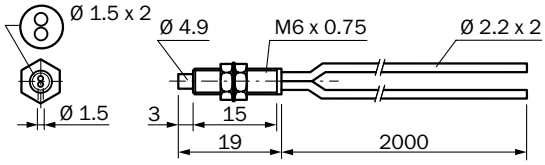

LL3-DH03

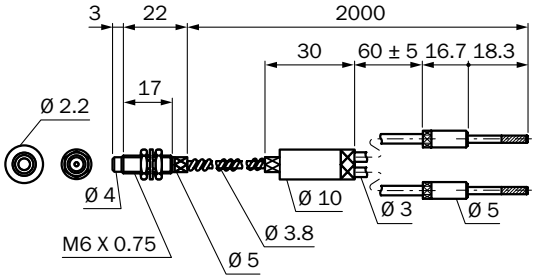

LL3-DH09

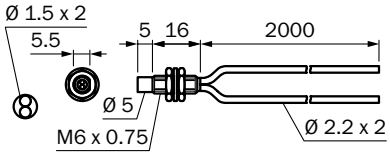

Resistant to oil/chemicals

- **Detection principle:** Proximity system

LL3-DY01

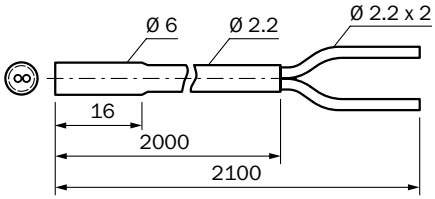

J

LCDs/transparent objects/semiconductors

- **Detection principle:** Proximity system

LL3-DC38

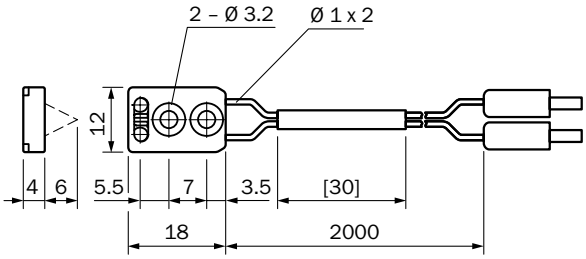

LL3-DC39

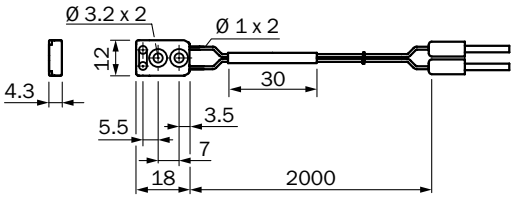

LL3-DC05

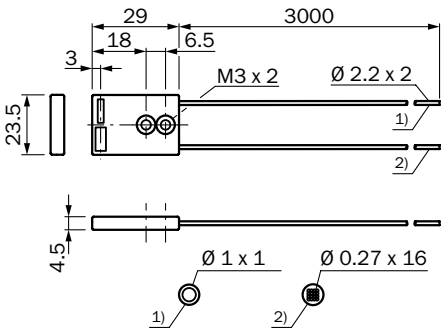

1) Sender
2) Receiver

Retro-reflective

- **Detection principle:** Proximity system

LL3-RB01

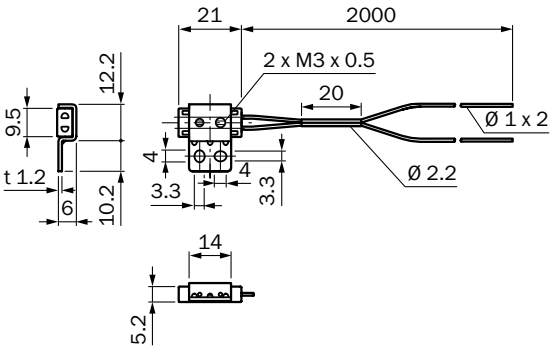

LL3-RB02

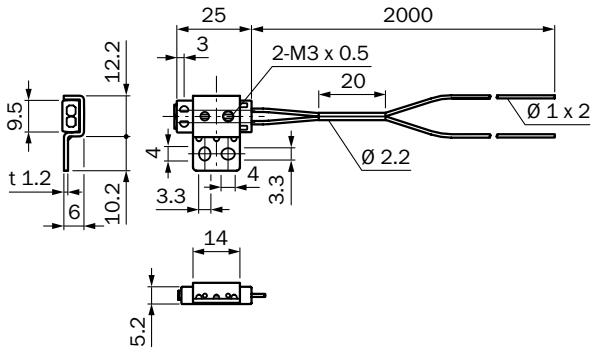

J

LL3-RG01

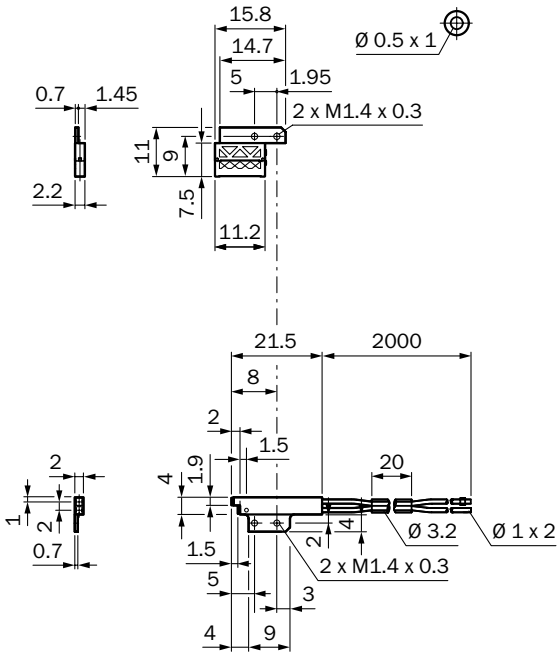

LL3-RR01

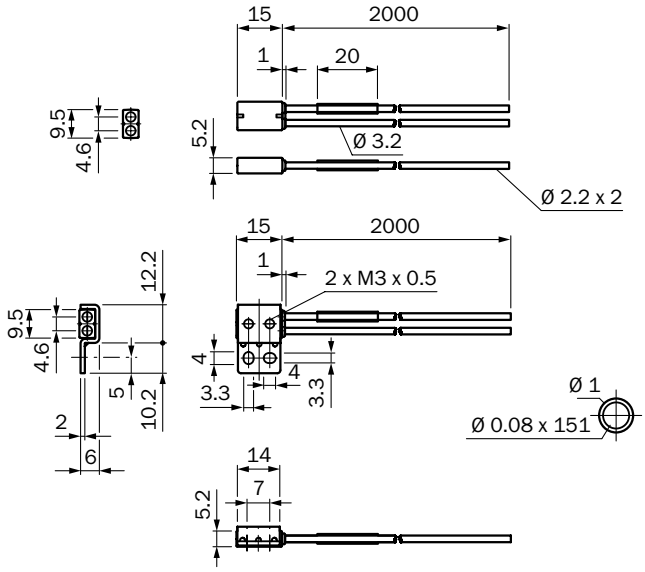

Liquid level

- **Detection principle:** Proximity system

LL3-DF04

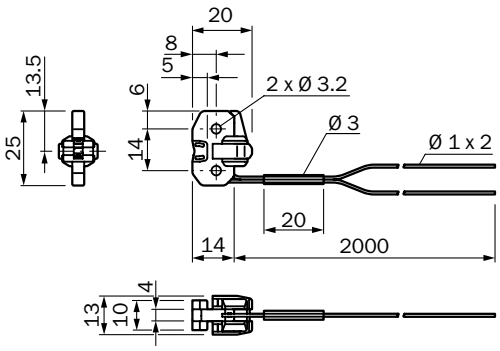

LL3-DF05

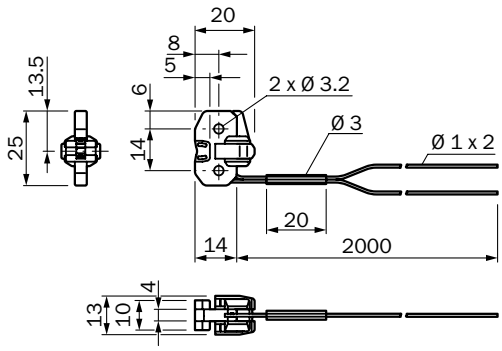

LL3-DF07

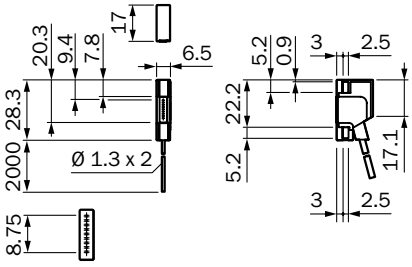

LL3-DF02-S01

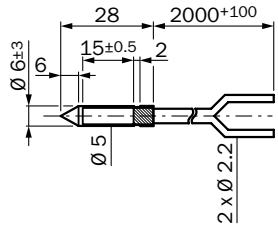

J

LL3-DW02

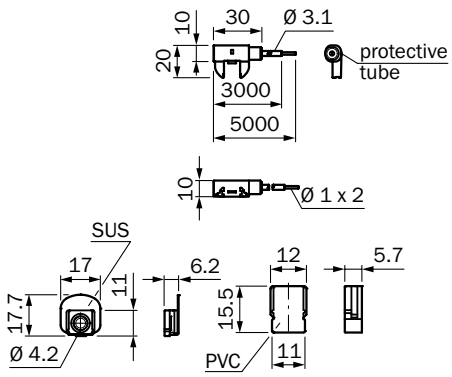

Threaded sleeve

- **Detection principle:** Through-beam system

LL3-TJ01

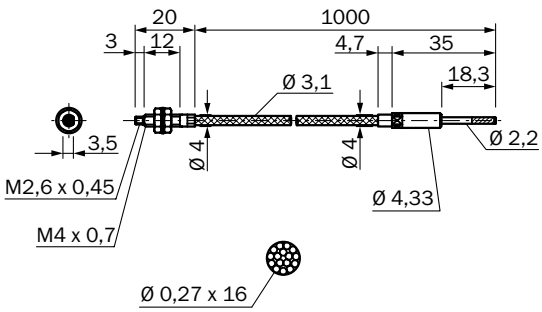

LL3-TR02

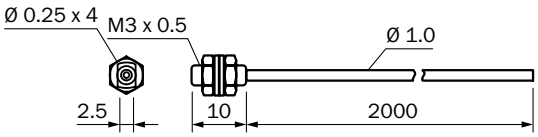

LL3-TM02

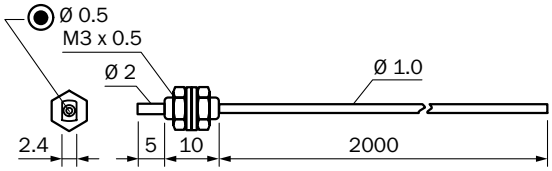

LL3-TK77

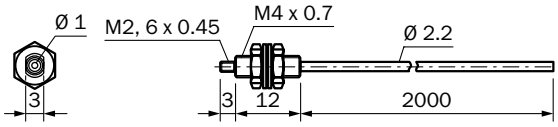

LL3-TB02

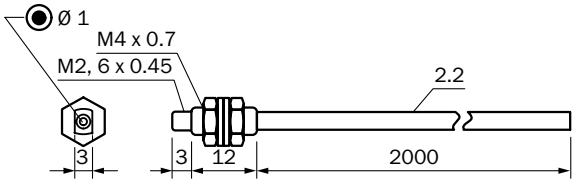

LL3-TM01

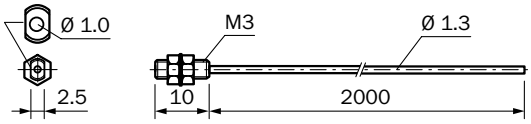

LL3-TR01

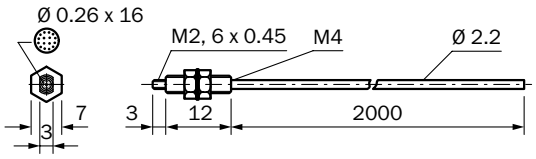

LL3-TB01

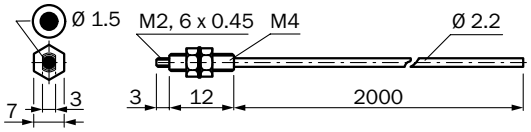

J

LL3-TB08

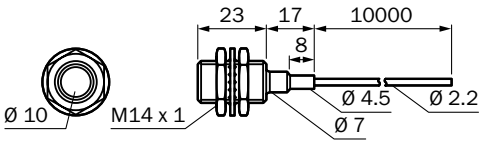

LL3-TX02

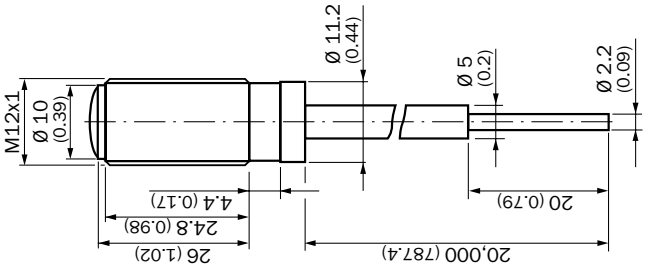

Smooth sleeve

- **Detection principle:** Through-beam system

LL3-TR04

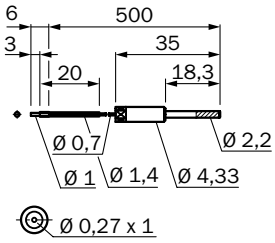

LL3-TR03

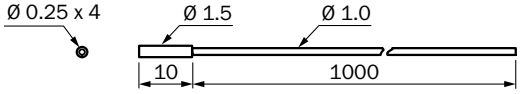

LL3-TH06

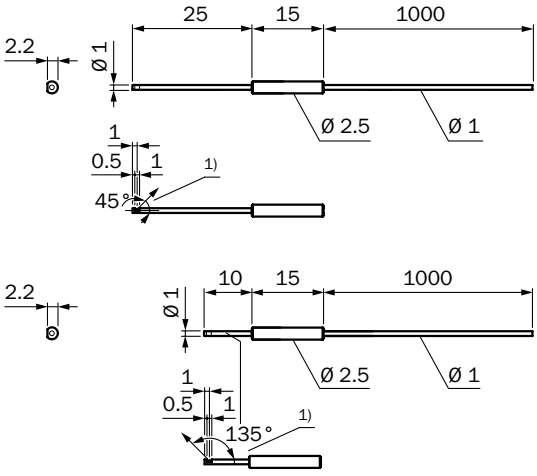

1) angle of beam

LL3-TG05

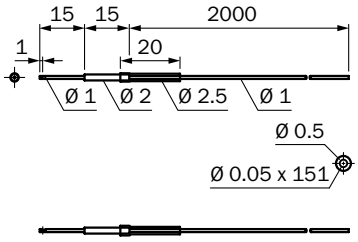

J

LL3-TR10

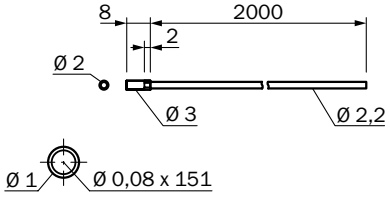

LL3-TB07

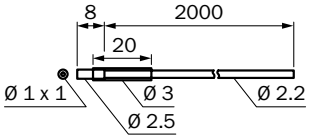

LL3-TG03, LL3-TV08

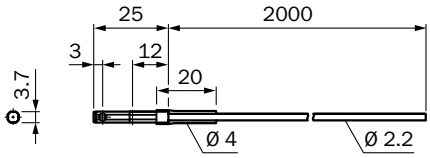

LL3-TM03

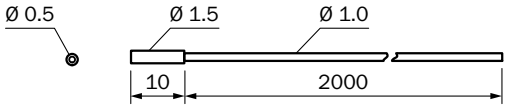

LL3-TK05

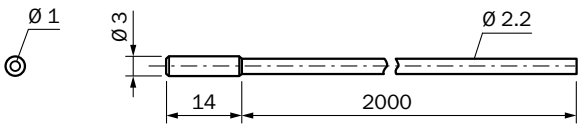

LL3-TS07

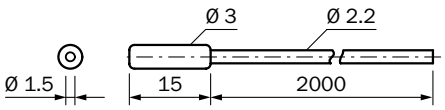

90° deflection

- **Detection principle:** Through-beam system

LL3-TR09

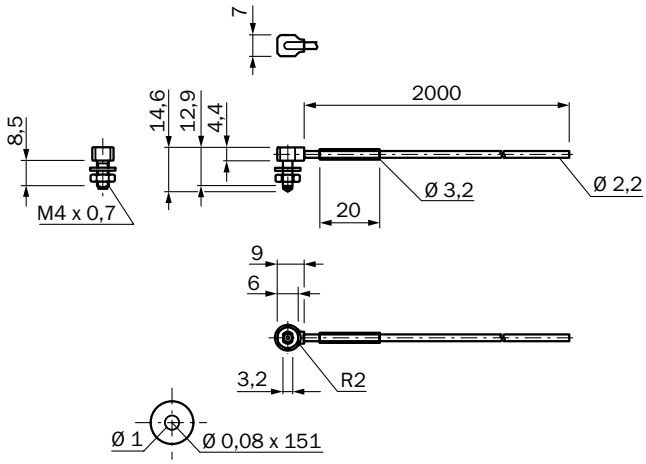

LL3-TB06

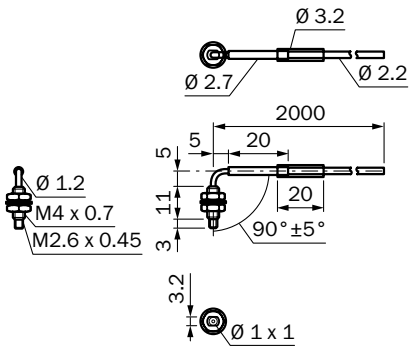

LL3-TR08

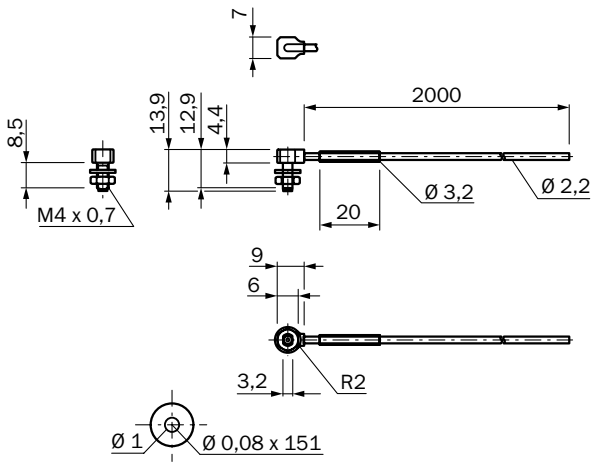

LL3-TH07

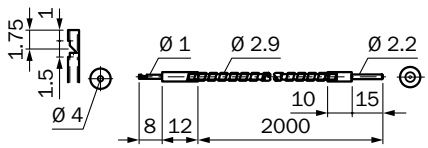

J

LL3-TH15

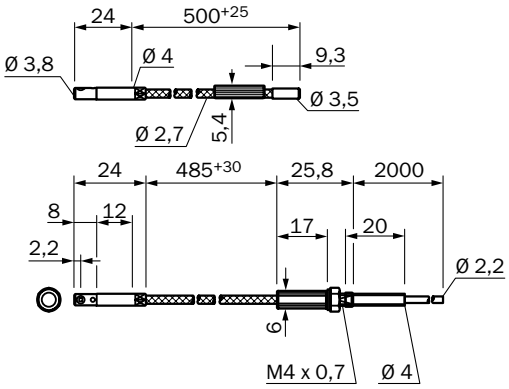

LL3-TH16

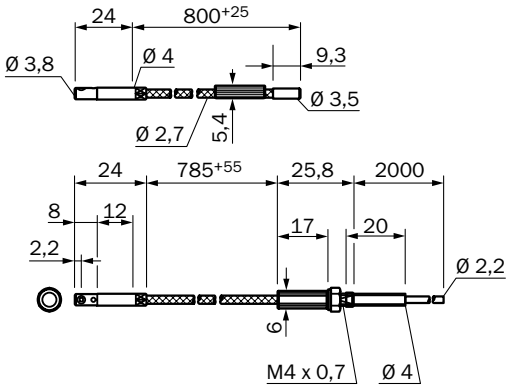

LL3-TV05

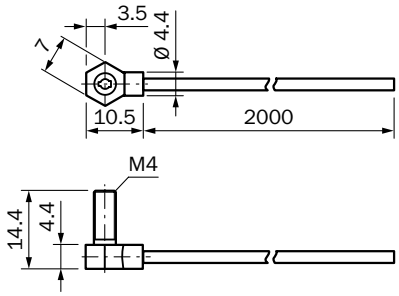

LL3-TV06, LL3-TV07

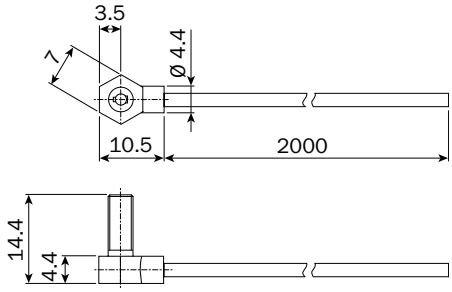

LL3-TY03

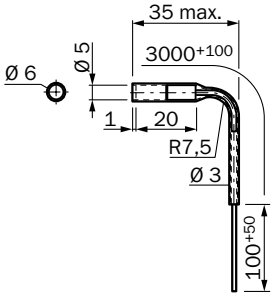

Flat type

- **Detection principle:** Through-beam system

LL3-TE01

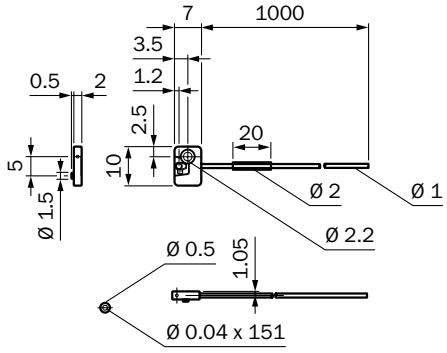

LL3-TE02

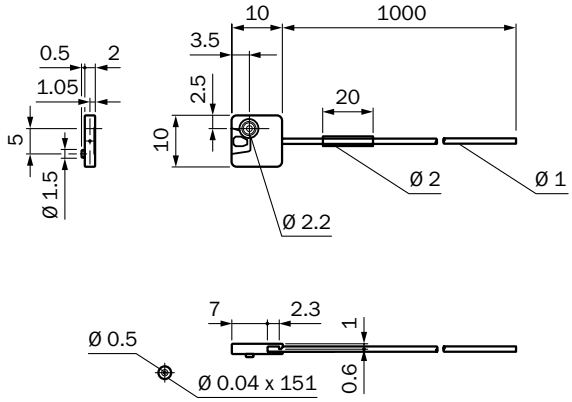

J

LL3-TE04

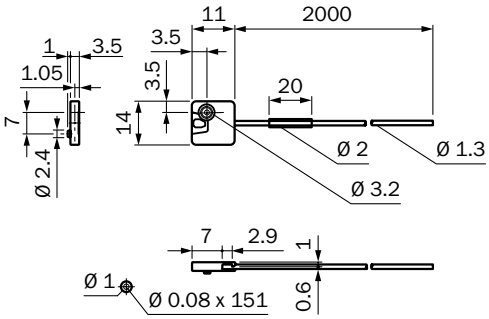

LL3-TE05

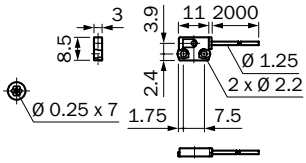

LL3-TR05

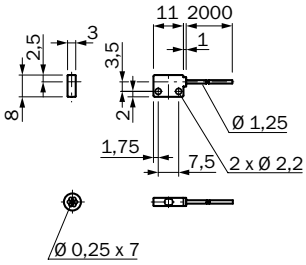

LL3-TR06

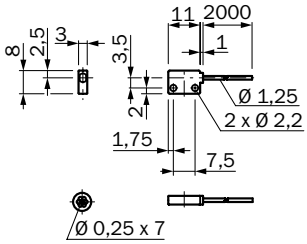

LL3-TR13

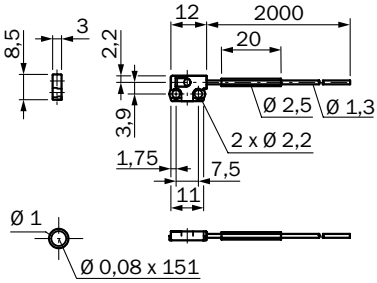

LL3-TR12

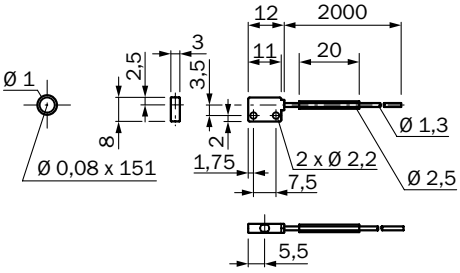

LL3-TR11

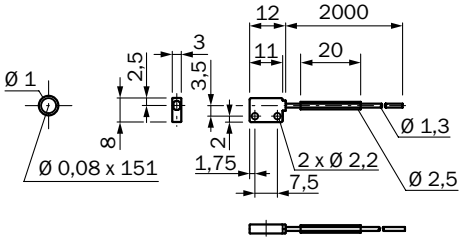

LL3-TE03

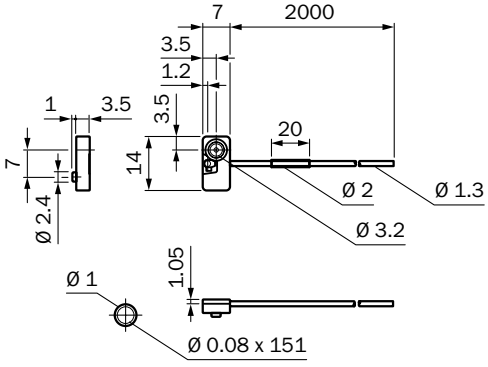

J

Long end sleeve

- **Detection principle:** Through-beam system

LL3-TP01

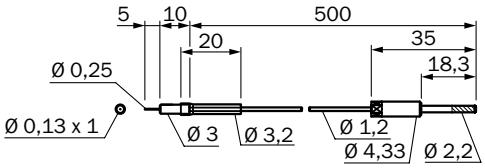

LL3-TB05

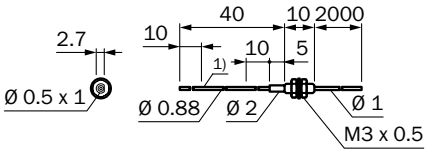

1) bendable

LL3-TT01

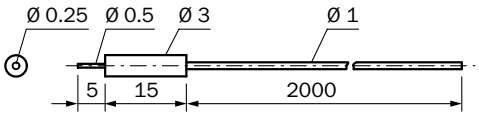

LL3-TV02

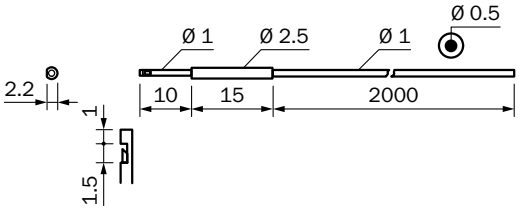

LL3-TV04

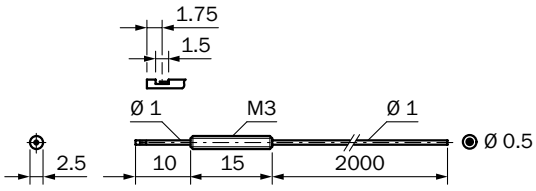

LL3-TB03

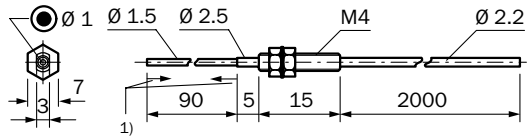

1) Flexible end tip, do not bend in this area (10 mm), bend radius R10 mm

LL3-TK16

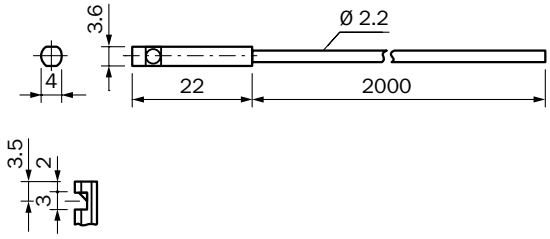

LL3-TS08

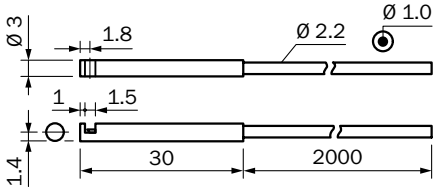

LL3-TV01

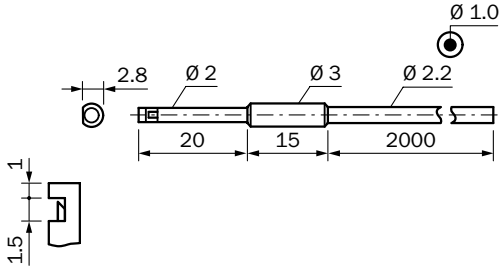

LL3-TS12

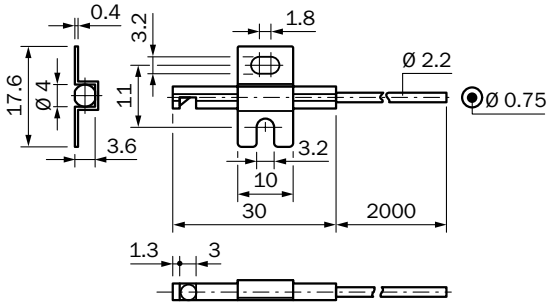

J

Area detection

- **Detection principle:** Through-beam system

LL3-TZ09

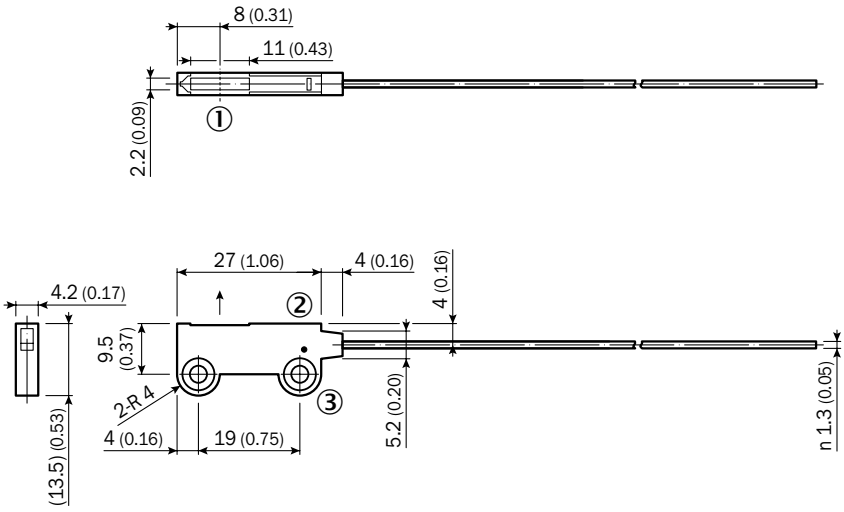

LL3-TZ10

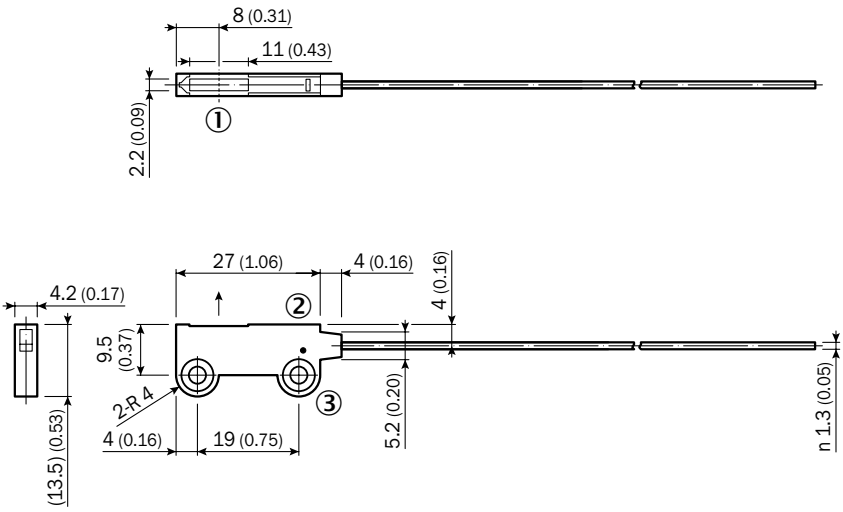

LL3-TS40

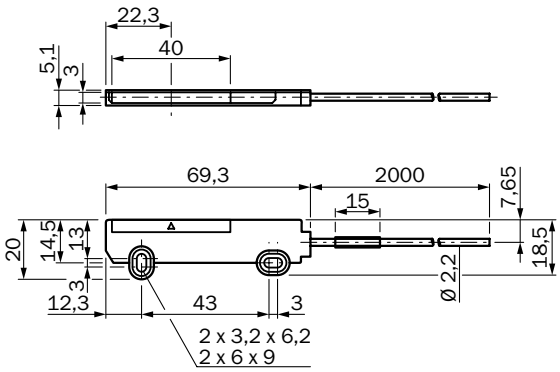

LL3-TZ05

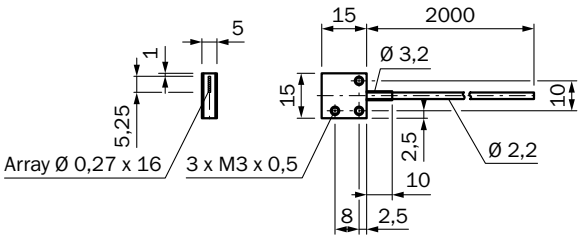

J

LL3-TZ06

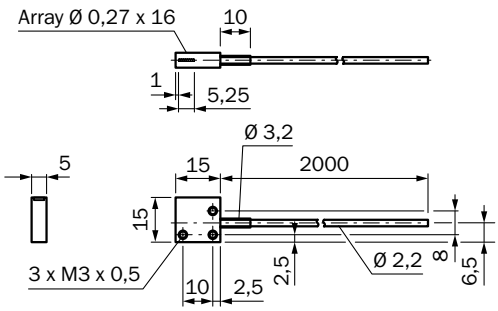

LL3-TS14

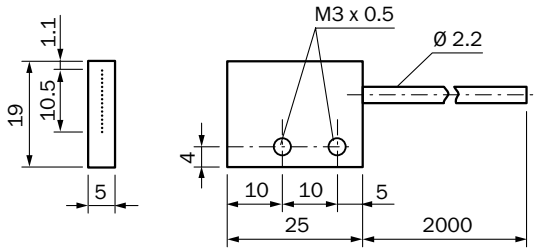

LL3-TS10

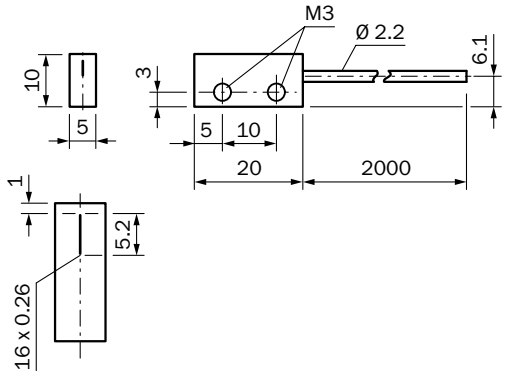

Heat-resistant

- **Detection principle:** Through-beam system

LL3-TH10

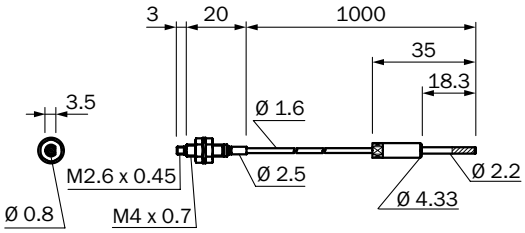

LL3-TH11

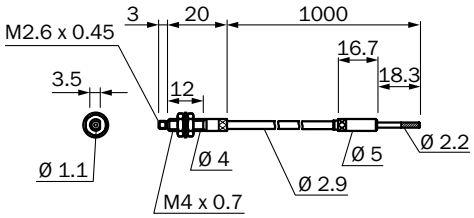

LL3-TW01

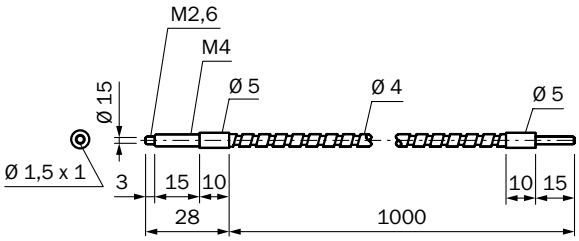

LL3-TH08

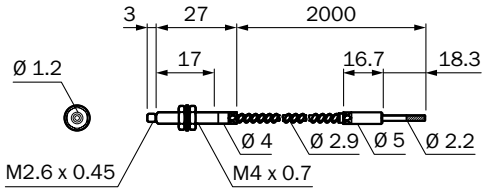

J

LL3-TH09

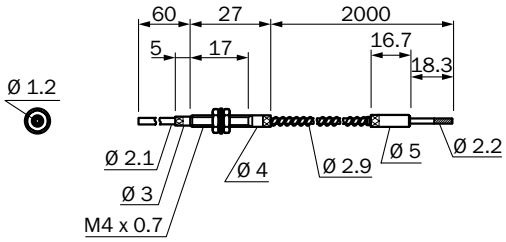

LL3-TH17

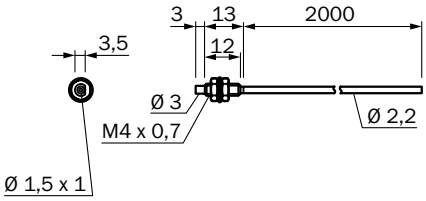

LL3-TH12

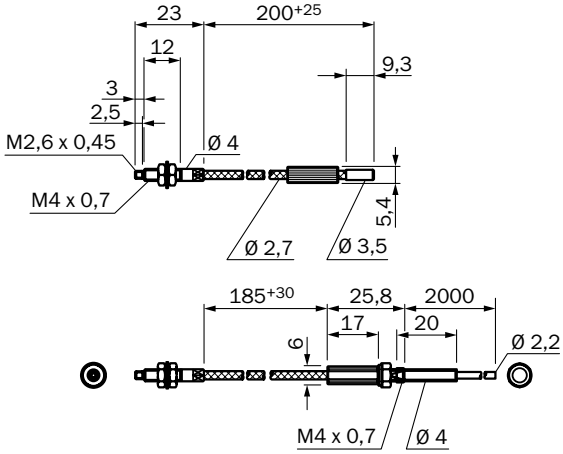

LL3-TH13

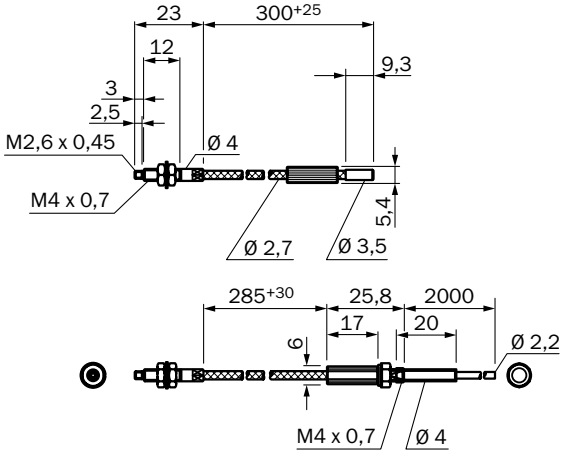

LL3-TH14

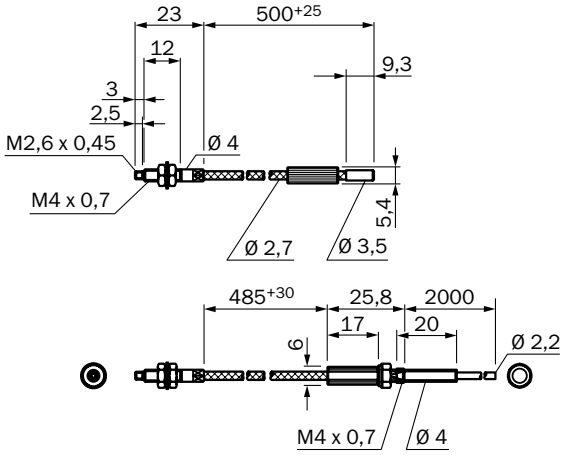

LL3-TH01

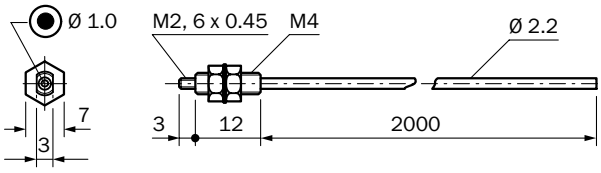

LL3-TH02

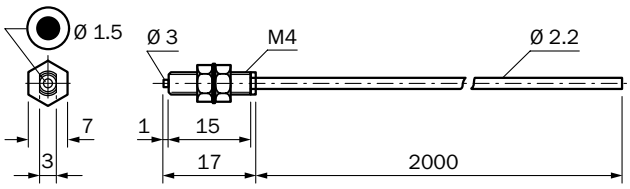

J

LCDs/transparent objects/semiconductors

- **Detection principle:** Through-beam system

LL3-TG04

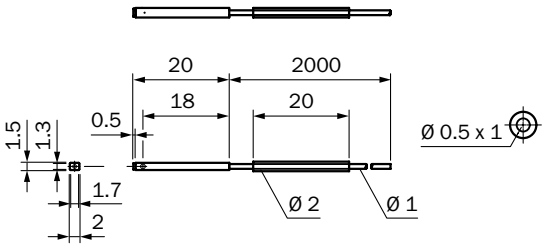

LL3-TS22M

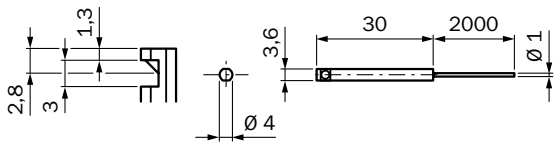

LL3-TS22

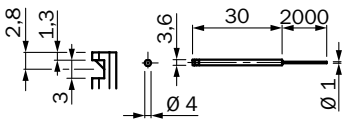

LL3-TG02

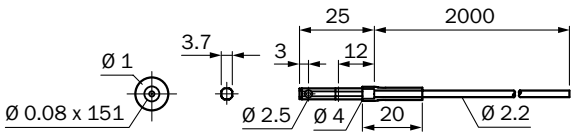

LL3-TG01

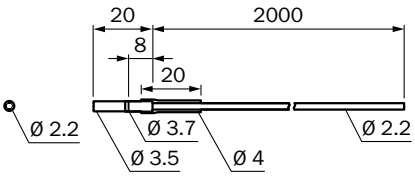

LL3-TG03

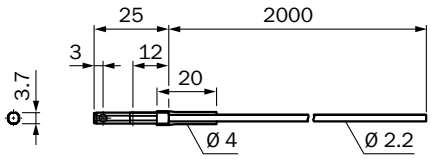

Resistant to oil/chemicals

- **Detection principle:** Through-beam system

LL3-TY01

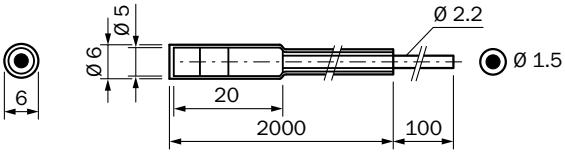

LL3-TY02

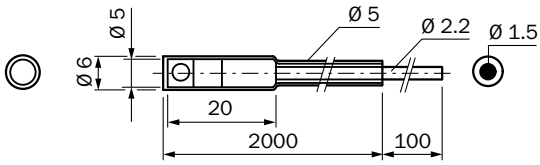

LL3-TY05

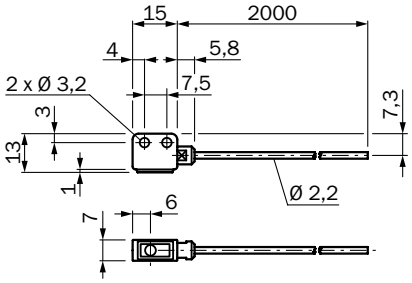

LL3-TY04

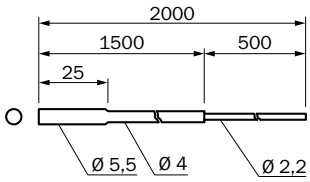

J

Liquid level

- **Detection principle:** Through-beam system

LL3-TF01

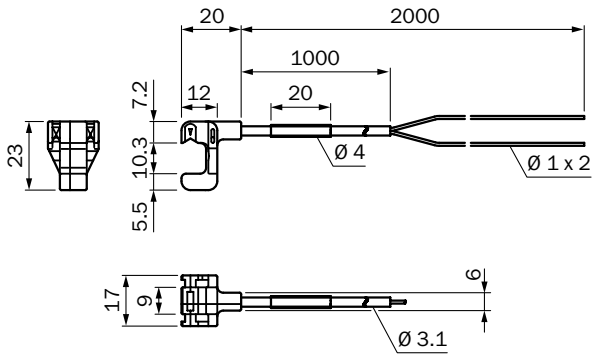

Tip adapters

- **Detection principle:** Proximity system

LL3-DA01

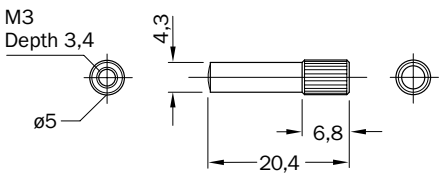

LL3-DA02

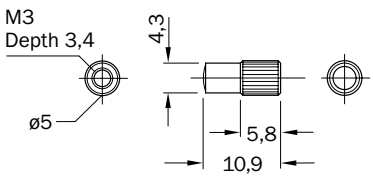

- **Detection principle:** Through-beam system

LL3-TA01

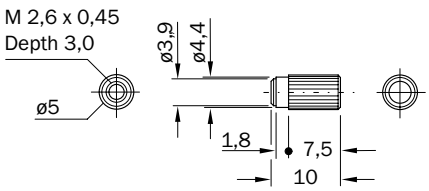

LL3-TA02

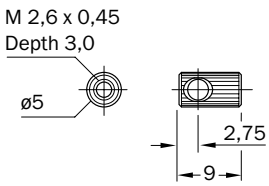

Recommended accessories

Others

Figure	Description	Model name	Part no.
	Cutter for fibers, supplied with LL3	FC	5304141

→ **For additional accessories, please see page L-861**

J

Your order, please! Customizable solutions to fit your needs.

If you don't find the photoelectric sensors in the SICK portfolio that meets your requirements, we can develop a sensor based on your specifications that fits your application.

Even with a wide range of standard photoelectric sensors, individual and customized solutions are sometimes required to meet the specific requirements and application conditions in the automation industry. The dialog with our specialists for customized development begins here.

Whether small but crucial adaptations to standard components or extensive new developments are needed – our experts develop the optimum solution. This enables SICK to guarantee a clear structure for your project right from the start.

K

8015327/2014-02-08
Subject to change without notice

Tailored solutions

The design to implementation of a tailored solution is divided into three areas of expertise and six phases. During each phase of the project, you can rely on our support and expert knowledge – anywhere in the world.

1 Application analysis
SICK provides you with on-site assistance in the analysis of your requirements for a customized sensor.

2 Assessment of requirements
All requirements are assessed and prioritized to produce a clear picture of which product adjustments are necessary.

3 Drawing up a specification
We work with you to draw up the specifications for your customized solution.

4 Prototyping
SICK uses the specifications to produce a fully functional prototype sensor.

5 Test installation
Test installations are carried out with the support of the SICK service team to ensure successful integration of the product.

6 Production and supply
Upon approval, SICK will supply the product with all SICK quality standards relating to final production and product quality.

K

Customizable solutions to fit your needs

SICK is your innovative, reliable, and expert partner when it comes to assessing and prioritizing all your application requirements. After analyzing the necessary product adjustments, we work with you to define the specifications for your customized solution.

We are happy to use the "building blocks" below to create modified sensor solutions that meet your application description in full:

Housing

- Form and design
- Dimensions
- Material
- Integrated assembly concept
- Protective housing

Cable

- Length
- Material
- Special features (e.g., oil resistant)
- Pin assignment

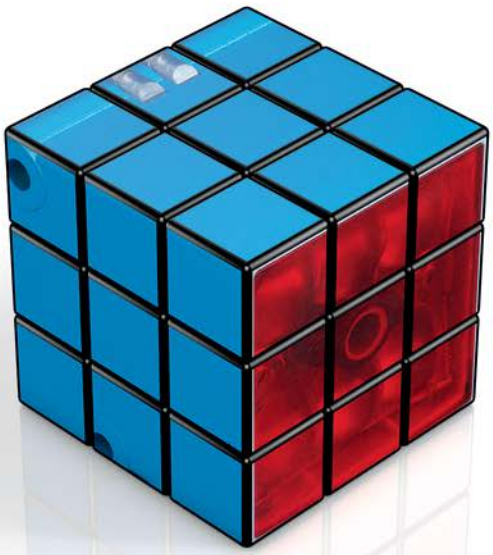

Connection

- M8
- M12
- Special connectors

Electronics

- Switching frequency
- Switching outputs
- Setting option (e.g., potentiometer, teach-in, fixed setting)

Packaging and kitting

- Combination of specific complete solutions (e.g., sensor with special accessories) and packaging units

On-site mounting

- Customized mounting concept for quick and easy installation of the sensor on site

Application-specific optics and detection

- Light source
- Focal position
- Special marking
- Special sensing range or sensitivity

K

my product

A range of other individually tailored modifications are also available.

Please get in touch – your contacts at SICK are happy to advise you.

8015327/2014-02-08
Subject to change without notice

K

Perfect sensor integration made easy

Innovative sensor technology is only one side of the coin when talking about intelligent automation solutions. The picture is completed by matching accessories for professional and cost-effective integration. Whether electrical connection technology or mechanical mounting systems, only the right integrative system products lead to a high quality, highly available application solution. The advantage? Sensors and accessories work in conjunction to offer maximum operational safety.

In addition, the user is able to save additional costs for development, manufacture and procurement. A wide range of accessory components are always available on short-notice – convenient single-source availability in combination with sensors. And in the event that a custom solution is required, SICK is on your side as a reliable and competent partner. Tailored developments and adaptations can be implemented in just a short period of time.

Accessories from SICK – the solution for reliable sensor integration.

L

Accessories

L

Mounting systems and connection technology

Mounting systems

To integrate SICK sensors perfectly into a machine or system, mounting equipment tailored precisely to the sensors is required. Whether fine adjustment to precision equipment or protection against harsh environmental conditions, SICK provides matching designs and products for mounting, alignment, and protection for its sensors. When it comes to special applications, SICK works with the customer to develop tailored and system-specific mounting elements, which are then delivered with the sensor.

Your benefits

- Quick system installation and maintenance thanks to a broad portfolio of simple, practical sensor mounting options that have been tailored to SICK sensors
- Flexible, customized alignment of the sensor to the object being detected using the universal clamp system
- Prevention of sensor damage (e.g., due to mechanical loads) and guarantee of sensor functionality with the aid of SICK sensor protection solutions
- Application-specific solutions are available for mounting, aligning and protecting sensors

Passive connection technology

A broad portfolio of termination screw male and female connectors allows customized wiring solutions to be implemented. Different lengths and qualities of cable can be combined to suit the application – quickly and smoothly. Connecting cables (with a molded round connector on one end and open at the other end), offer maximum flexibility when wiring sensors.

Your benefits

- Operational safety because the connection technology is designed for the sensors
- Reduced costs thanks to high-quality components with long service lives
- Guaranteed productivity thanks to reliable detection
- Terminal screwed connectors with screw connection or push-in connection (M8, angled)
- Broad portfolio of connecting and extension cables with PUR jacket (high resistance to oils, lubricants, and coolants), PVC jacket (good resistance to chemicals for use in dry zones), and for use in hygienic and washdown zones (maximum resistance to chemicals, acids, alkalis, and cleaning agents)

Reflectors

Reflectors are the indispensable counterpart for each photoelectric retro-reflective sensor. Together they form a reliable functional unit. Reliable detection of objects is only guaranteed, including under critical application conditions, if both components are optimally coordinated with one another.

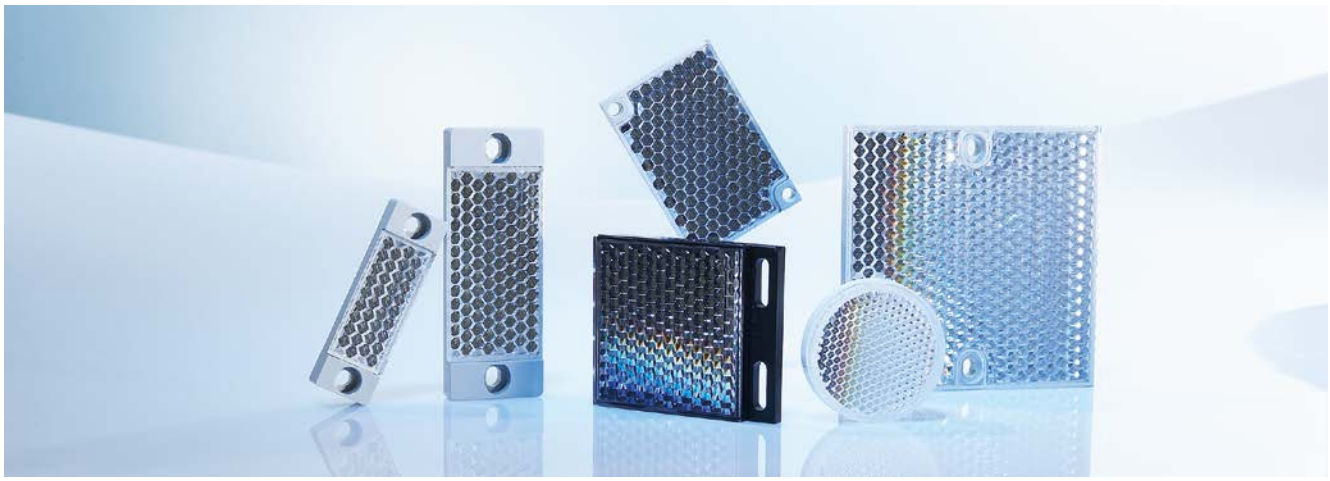

Standard reflectors versus reflective tape

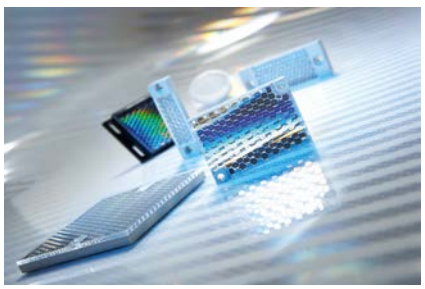

Standard reflectors from SICK vary according to size, shape, and mounting options. The large selection of different designs guarantees optimal sensor operation at all times and perfect integration of the reflectors into the systems.

Reflective tape is typically brought in when it is not possible to use a standard reflector, for example, due to mounting or space restrictions, or if the application requires a large, uninterrupted reflective surface.

Reflectors and reflective tape for laser sensors

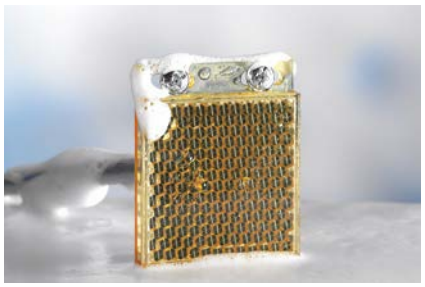

Laser photoelectric retro-reflective sensors are characterized in particular by their large sensing ranges and very small light spots. These characteristics, however, place special requirements on the reflector.

If the reflector's individual triple elements are too large, erroneous reflections may occur, resulting in signal interruptions – particularly if the laser light spot passes over the reflector.

For this reason, SICK provides **fine triple reflectors and reflective tape** specially designed for laser photoelectric retro-reflective sensors that have a particularly small triple structure. This ensures a stable reflection signal.

Reflectors for special applications

Most applications in industrial environments can be adapted to use standard plastic reflectors or reflective tape. However, **special applications** also require special sensors and reflectors. SICK therefore offers a wide range of special solutions:

- Chemically-resistant reflectors
- Stainless steel reflectors
- Heated reflectors (regulated and unregulated)
- Reflectors for high-temperature use
- Antifog reflectors
- Fine triple glass reflectors
- Dust-resistant and air-rinsed reflector solutions
- Large, premounted reflector plates
- And many more ...

Mounting systems

Mounting brackets/plates

Mounting brackets

Figure	For product family	Material	Description	Model name	Part no.
	G10	Steel, zinc coated	Mounting bracket for wall and floor mounting for G10 DC	BEF-G10DC01	2071258
			Mounting bracket for wall and floor mounting for G10 AC/DC	BEF-G10UC01	2071259
	W8, W8 Inox, W100, G6	Stainless steel	Mounting bracket for wall mounting	BEF-W100-A	5311520
		Steel, zinc coated	Mounting bracket for floor mounting	BEF-W100-B	5311521
	W9M4-3			BEF-W160	5305197
	W250-2	Steel, zinc coated	Mounting bracket	BEF-W250	5305850
	W280-2	Stainless steel V2A (1.4301)	Mounting bracket	BEF-W280	5313885
	W2S-2	Steel, zinc coated	Mounting bracket for floor mounting	BEF-W2S-A	4034748
			Mounting bracket for wall mounting	BEF-W2S-B	4034749
	W4-3	Stainless steel 1.4571	Mounting bracket for wall mounting	BEF-W4-A	2051628
			Mounting bracket for floor mounting	BEF-W4-B	2051630
	GR18, V180-2, V18, W15, Z1, Z2	Steel, zinc coated	Mounting plate for M18 sensors	BEF-WG-M18	5321870
	W11-2, W12-3	Stainless steel	Mounting bracket, large	BEF-WG-W12	2013942
	W24-2			BEF-WG-W24	4026324
	W11-2, W12-3		Mounting bracket, small	BEF-WK-W12	2012938
	W24-2			BEF-WK-W24	4027532

L

Figure	For product family	Material	Description	Model name	Part no.
	R/IR	Steel, zinc coated	Mounting bracket	BEF-WK-WTR	2051786
	WLL170-2			BEF-WLL170	5306574
	WLL180			BEF-WLL180	5325812
	G6	–	–	BEF-WN-G6	2062909
	GR18, V180-2, V18, W15, Z1, Z2	Steel, zinc coated	Mounting bracket, M18 thread	BEF-WN-M18	5308446
	W27-3	Steel, zinc coated	Mounting bracket for weather hood	BEF-WN-OBW	2023251
	C110A, P250, PL20A PL30A, PL40A, PL80A	Steel, zinc coated	Universal mounting bracket for reflectors, 85 mm x 90 mm x 35 mm	BEF-WN-REFX	2064574
	W100-2	Steel, zinc coated	Mounting bracket for floor mounting	BEF-WN-W100-S01	4073866
	W14-2, W18-3	Steel, zinc coated	Mounting bracket	BEF-WN-W14	2019084
			Mounting bracket with hinged arm	BEF-WN-W18	2009317
	W23-2, W27-3, Reflex Array		Mounting bracket	BEF-WN-W23	2019085
	W24-2	Stainless steel (1.4301)	Mounting bracket	BEF-WN-W24	2015248
	W23-2, W27-3, Reflex Array	Steel, zinc coated	Mounting bracket with hinged arm	BEF-WN-W27	2009122
	W9-3		Mounting bracket	BEF-WN-W9-2	2022855

Mounting plates

Figure	For product family	Material	Description	Model name	Part no.
	W9-3	PMMA, Brass (Br)	Fastening plate with threaded sleeve M3	BEF-GPM3-W9	4066039
	GR18, V180-2, V18, W15, Z1, Z2	Stainless steel	Mounting plate for M18 housing	BEF-WG-M18N	5320948
			Mounting bracket	BEF-WN-M18N	5320947
	R/IR	Steel, zinc coated	Mounting bracket	BEF-WN-WTR	2017417

L

Masks

Figure	Description	Model name	Part no.
	Slotted mask, transmitter and receiver each have 2 self-adhesive masks	BL-100-10	5314182
	Mask card for WS/WE12-3 with 2 self-adhesive masks each for sender and receiver, slot width X: 0.5 mm/1.0 mm/1.5 mm/2.0 mm	BL-12-SKN	4031815
	Mask card, vertical/horizontal slots, slot width: 0.5 mm / 1.0 mm / 1.5 mm / 2.0 mm	BL-9-2	4033253

Device protection (mechanical)

Cooling elements

Figure	For product family	Description	Model name	Part no.
	W24-2	Water cooling plate	BEF-KP-W24	2015071

Protective housings/pipes

Figure	For product family	Material	Description	Model name	Part no.
	G10	Steel, zinc coated	Weather protection hood for G10	BEF-G10WSG	2071960
	Reflector PL80A		Weather protection hood for reflectors PL80A, P250, PL40A	BEF-PL80AWSG	2071961
	W11-2, W12-3	Zinc plated steel (protective housing), Diecast zinc (clamp)	Protective housing for universal clamp	BEF-SG-W12-3	2045175
	W14-2, W18-3			BEF-SG-W14	2058124
	W27-3, Reflex Array			BEF-SG-W27	2039601
	W4S-3, W8, W100, G6	Stainless steel 1.4571	Safety bracket for floor mounting	BEF-SW-W4S	2051497
	W2S-2, G2	Aluminum (mounting bracket), Steel, chrome-plated (coil)	Protective housing for spiral flex hose	BEF-W2S-C	2033270
	W24-2	Aluminum (anodised)	Dust protection tube, air-purged	OBS-W24	2015069
	W23-2, W24-2, W27-3, W34, Reflex Array	Steel, zinc coated	Weather hood for universal clamp bracket	OBW-KHS-M01	2023240
	W24-2	Aluminum (anodised)	Weather hood	OBW-W24	2015070
	W24-2			WSG1-01	1018470

L

Terminal and alignment brackets

Alignment brackets

Figure	For product family	Material	Description	Model name	Part no.
	W2S-2	Plastic	Ball clamp bracket	BEF-GH-MINI01	2023160
	GR18, V180-2, V18, W15, Z1, Z2	Plastic	Mounting bracket with ball-and-socket	BEF-WN-M18-ST02	5312973

Terminal brackets

Figure	For product family	Material	Description	Model name	Part no.
	W11-2, W12-3	Steel, zinc coated	Double clamp bracket for dovetail mounting	BEF-DKH-W12	2013947
	GR18, V180-2, V18, W15, Z1, Z2	Plastic	M18 mounting bracket, radial rotation possible, with 4 mm fixing holes	BEF-HA-M18R	5313513
	GR18, MH15V, V180-2, V18	Plastic (PA12), glass-fiber reinforced	Clamping block for round sensors M18, without fixed stop	BEF-KH-M18	2051481
			Clamping block for round sensors M18, with fixed stop	BEF-KHF-M18	2051482
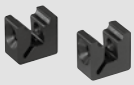	W11-2, W12-3	Steel, zinc coated	Clamping block for dovetail mounting	BEF-KH-W12	2013285
	GR18, MH15V	Plastic (PA12)	Integrated adapter	BEF-WN-MH15-1	4039533
	MH15V, V180-2, V18	Stainless steel	Mounting ring	BEF-WN-MH15-2V	4053358

Other mounting accessories

Figure	Description	Model name	Part no.
	Diameter 18 mm x 100 mm for W4S-3 Inox hygiene. Hygienic integration without holes and brackets. Cable runs inside tube	BEF-MR18G-NA	4065853

Others

Figure	For product family	Material	Description	Model name	Part no.
	GR18S, radial, fully flush	–	Mounting tool for “fully flush” variants	BEF-TO-GR18S	4072132
	WLL180T	Stainless steel	Rail end piece for block mounting	BF-EB01-W190	5313011
	LL3	–	Cutter for fibers, supplied with LL3, 10 mm x 37 mm x 65 mm	FC	5304141

L

Universal bar clamp systems

Figure	Material	Description	Model name	Part no.
	Hygienic Design, Stainless steel V4A (1.4404, 316L), Silicone (seal)	Hygienic design mounting tube with bayonet lock, 14.4 mm x 85.5 mm x 14.4 mm	BEF-HDSBR	4074403
		Hygienic design flange with seal, 40 mm x 12 mm x 40 mm	BEF-HDSF	4072880
		Hygienic design telescopic tube, straight, with bayonet lock without flange, 23 mm x 153 mm x 23 mm	BEF-HDSTRG	2067780
		Hygienic design telescopic tube, straight, with bayonet lock with flange, 40 mm x 165 mm x 40 mm	BEF-HDSTRGF	2067779
		Hygienic design telescopic tube bended, shorted, with shorted bayonet lock with flange, 40 mm x 97.5 mm x 76 mm	BEF-HDSTRK1WF	2071931
		Hygienic design telescopic tube bended, extended, with extended bayonet lock with flange, 40 mm x 249 mm x 40 mm [1]	BEF-HDSTRL1GF	2072047
		Hygienic design telescopic tube, angled, with bayonet lock without flange, 23 mm x 125 mm x 73 mm	BEF-HDSTRW	2067778
		Hygienic design telescopic tube, angled, with bayonet lock with flange, 40 mm x 125 mm x 76 mm	BEF-HDSTRWF	2067777
	Zinc diecast	Universal bar clamp for mounting bars with 12 mm diameter	BEF-KHS-KH3	5322626
	Stainless steel V2A (1.4301)	Universal clamp bracket for mounting bars with 12 mm diameter	BEF-KHS-KH3N	5322627
	Zinc plated steel (sheet), Diecast zinc (clamp)	Plate N02 for universal clamp bracket	BEF-KHS-N02	2051608
	Stainless steel 1.4571 (sheet), Stainless steel 1.4408 (clamp)	Plate N02N for universal clamp bracket	BEF-KHS-N02N	2051618
	Zinc plated steel (sheet), Diecast zinc (clamp)	Plate N03 for universal clamp bracket	BEF-KHS-N03	2051609
		Plate N04 for universal clamp bracket	BEF-KHS-N04	2051610
	Stainless steel 1.4571 (sheet), Stainless steel 1.4408 (clamp)	Plate N03N for universal clamp bracket	BEF-KHS-N04N	2051619
	Zinc plated steel (sheet), Diecast zinc (clamp)	Plate N05 for universal clamp bracket	BEF-KHS-N05	2051611
	Stainless steel 1.4571 (sheet), Stainless steel 1.4408 (clamp)	Plate N04N for universal clamp bracket	BEF-KHS-N05N	2051620
		Plate N05N for universal clamp bracket, M12	BEF-KHS-N05N	2051621
	Zinc plated steel (sheet), Diecast zinc (clamp)	Plate N06 for universal clamp bracket	BEF-KHS-N06	2051612
	Stainless steel 1.4571 (sheet), Stainless steel 1.4408 (clamp)	Plate N06N for universal clamp bracket, M18	BEF-KHS-N06N	2051622
	Zinc plated steel (sheet), Diecast zinc (clamp)	Plate N07 for universal clamp bracket	BEF-KHS-N07	2051613
	Stainless steel 1.4571 (sheet), Stainless steel 1.4408 (clamp)	Plate N07N for universal clamp bracket	BEF-KHS-N07N	2051623

L

Figure	Material	Description	Model name	Part no.
	Zinc plated steel (sheet), Diecast zinc (clamp)	Plate N08 for universal clamp bracket	BEF-KHS-N08	2051607
	Stainless steel 1.4571 (sheet), Stainless steel 1.4408 (clamp)	Plate N08N for universal clamp bracket	BEF-KHS-N08N	2051616
	Die-cast zinc, Steel, zinc coated	Q-Lock, bar clamp system for G10 and reflector P250	BEF-KHSQ12R01	2071260
			BEF-KHSQ12ZR01	2071262
	Steel, zinc coated	Mounting bar, straight, 200 mm	BEF-MS12G-A	4056054
		Mounting bar, straight, 300 mm	BEF-MS12G-B	4056055
	Stainless steel (1.4571)	Mounting bar, straight, 200 mm	BEF-MS12G-NA	4058914
		Mounting bar, straight, 300 mm	BEF-MS12G-NB	4058915
	Steel, zinc coated	Mounting bar, L-shaped, 150 mm x 150 mm	BEF-MS12L-A	4056052
		Mounting bar, L-shaped, 250 x 250 mm	BEF-MS12L-B	4056053
	Stainless steel (1.4571)	Mounting bar, L-shaped, 150 mm x 150 mm	BEF-MS12L-NA	4058912
		Mounting bar, L-shaped, 250 mm x 250 mm	BEF-MS12L-NB	4058913
	Steel, zinc coated	Mounting rod, U-shape, bending radius 26 mm, 130 mm	BEF-MS12U	4065437
		Mounting bar, Z-shaped, 150 mm x 70 mm x 150 mm	BEF-MS12Z-A	4056056
		Mounting bar, Z-shaped, 150 mm x 70 mm x 250 mm	BEF-MS12Z-B	4056057
		Mounting bar, Z-shaped, 100 mm x 150 mm x 200 mm	BEF-MS12Z-C	4064563
	Stainless steel (1.4571)	Mounting bar, Z-shaped, 150 mm x 70 mm x 150 mm	BEF-MS12Z-NA	4058916
		Mounting bar, Z-shaped, 150 mm x 70 mm x 250 mm	BEF-MS12Z-NB	4058917
	Aluminum	Bar clamp for bar diameter of 12 mm (fixing the mounting rod)	BEF-RMC-D12	5321878

L

Dimensional drawings mounting brackets/plates

BEF-AP-W9

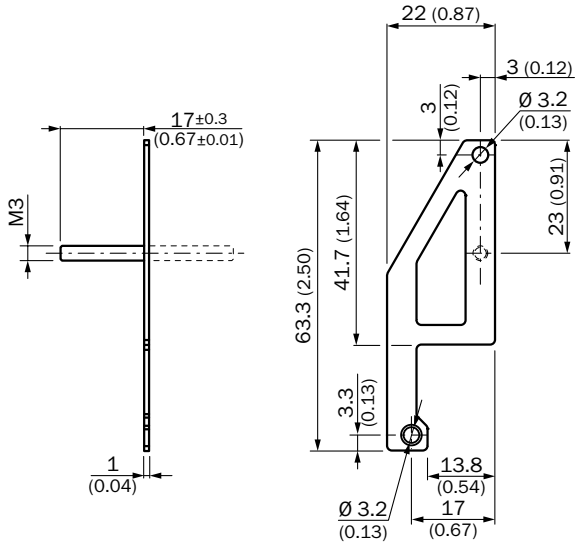

BEF-G10DC01

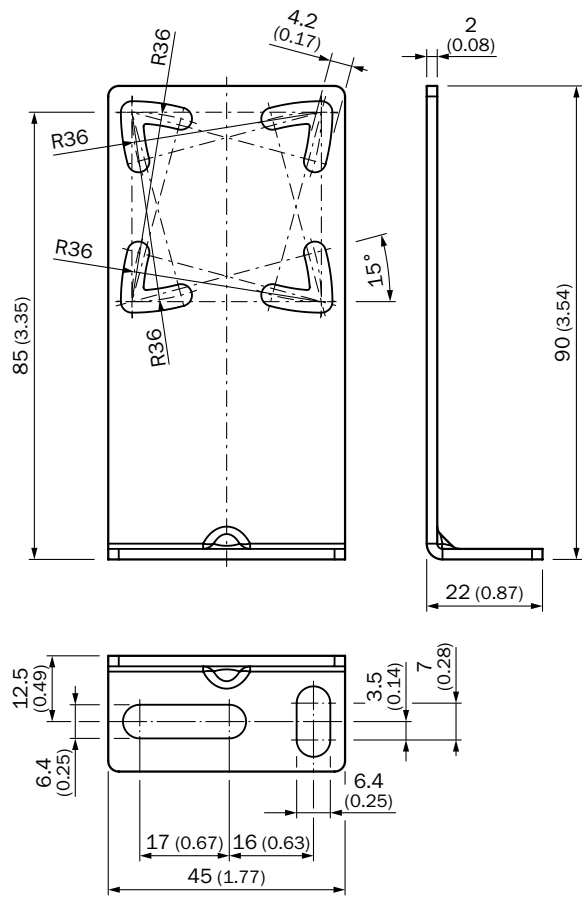

BEF-G10UC01

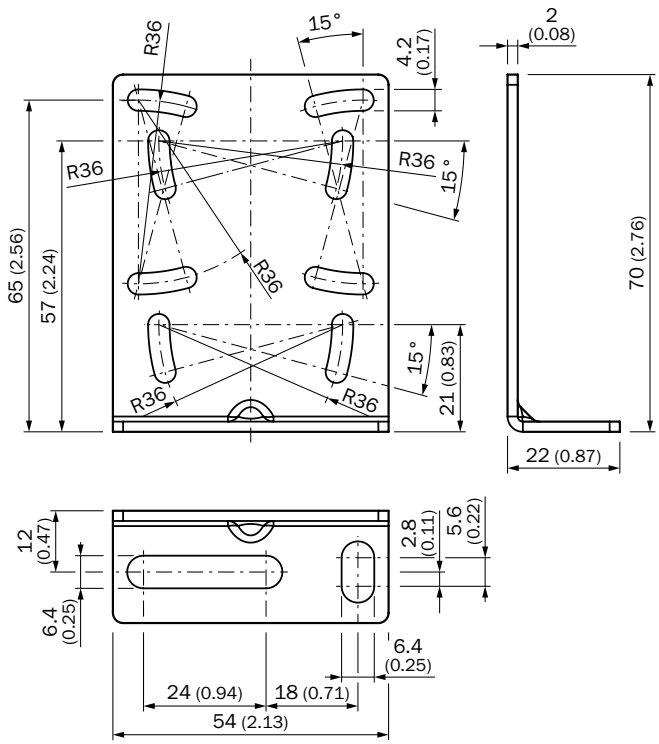

BEF-GPM3-W9

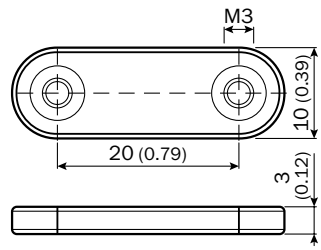

L

BEF-W100-A

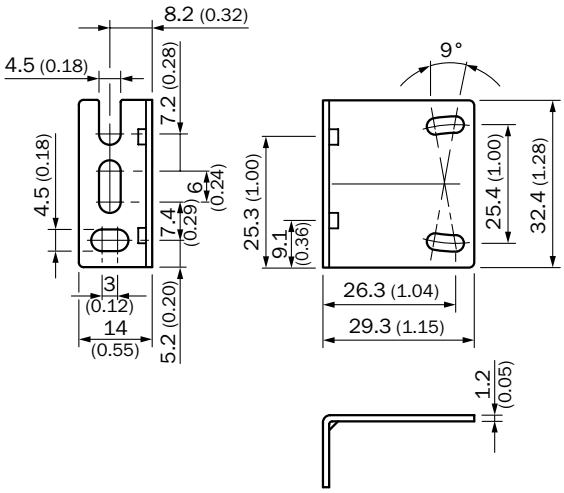

BEF-W100-B

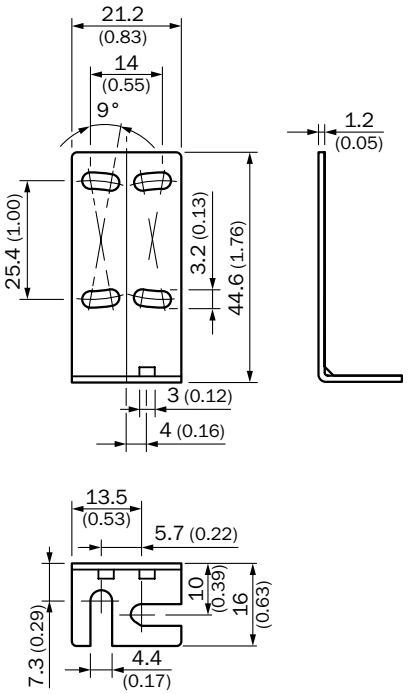

BEF-W160

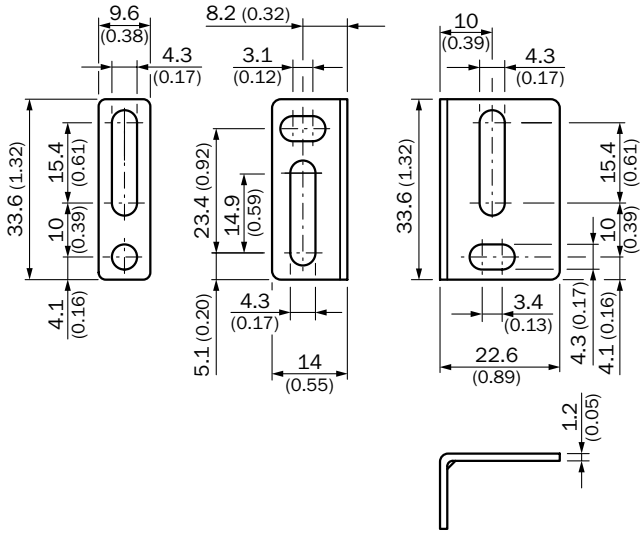

BEF-W250

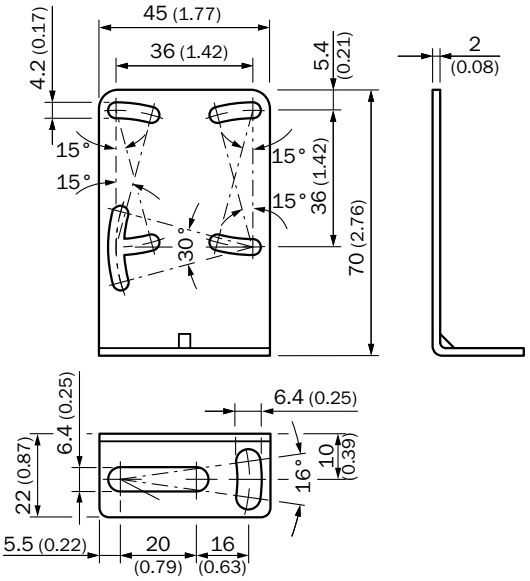

L

BEF-W280

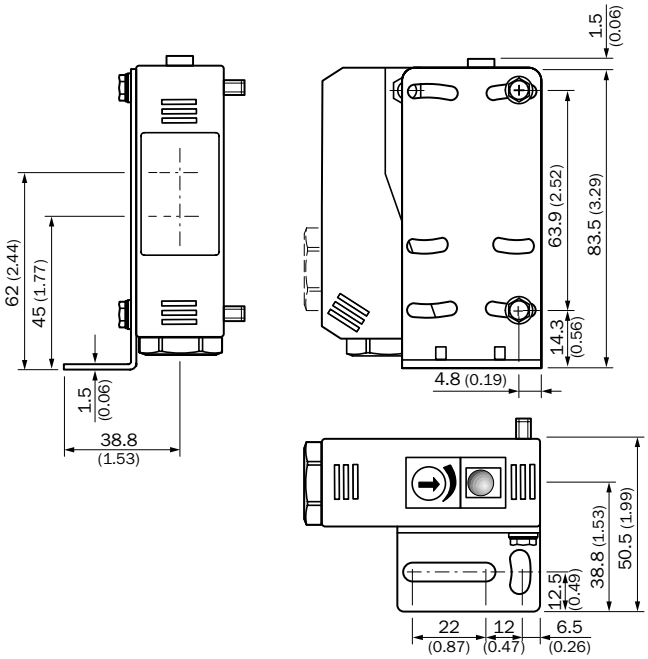

BEF-W2S-A

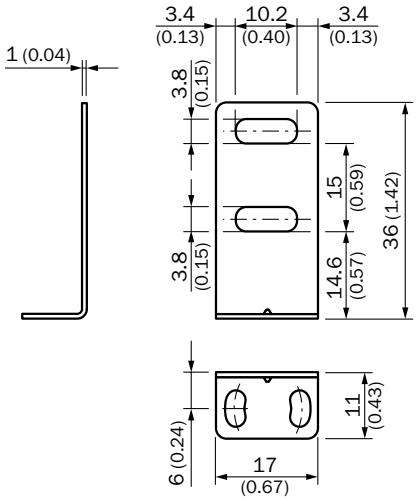

BEF-W2S-B

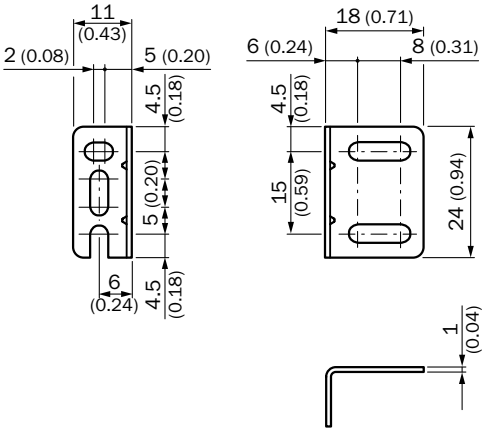

BEF-W4-A

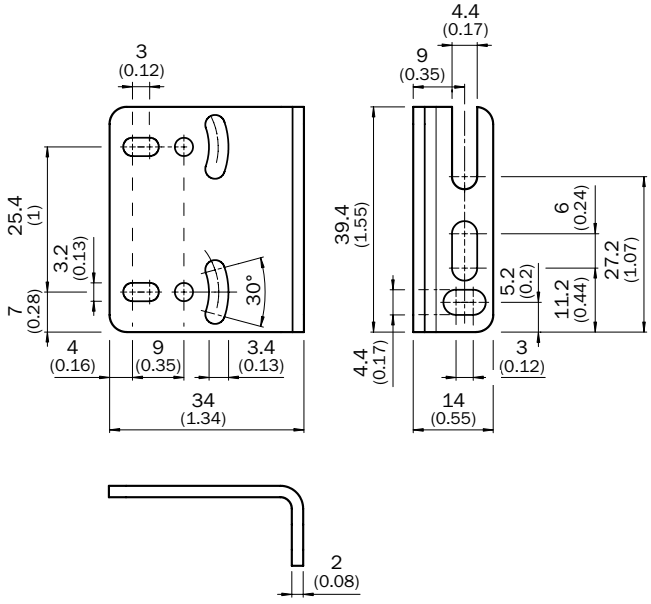

L

BEF-W4-B

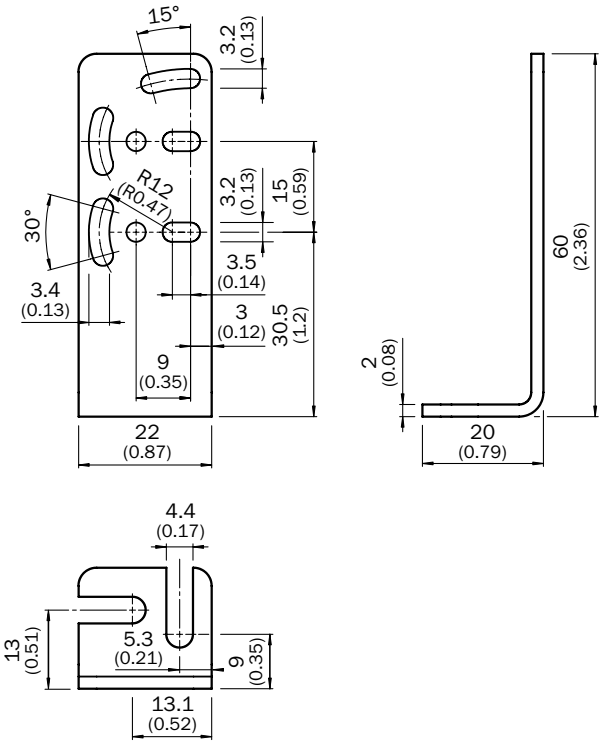

BEF-WG-M18
BEF-WG-M18N

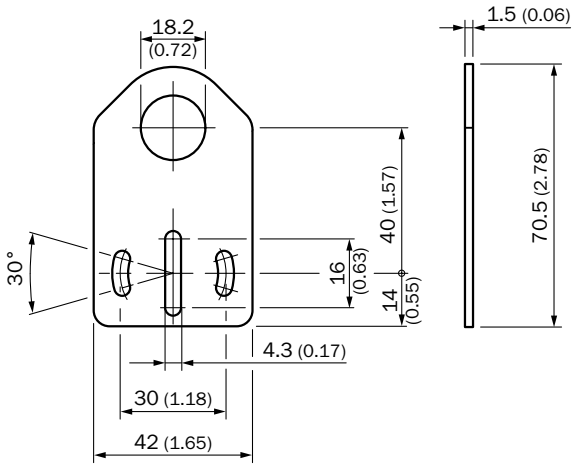

BEF-WG-W12

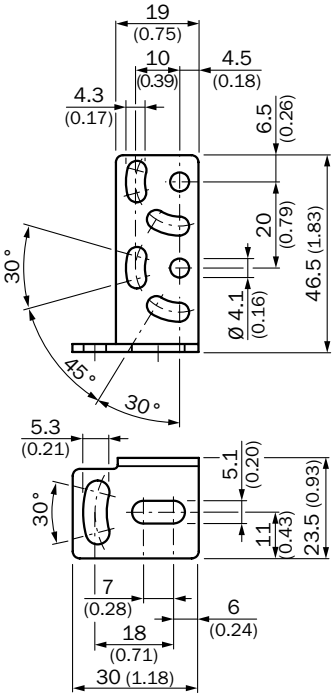

BEF-WG-W24

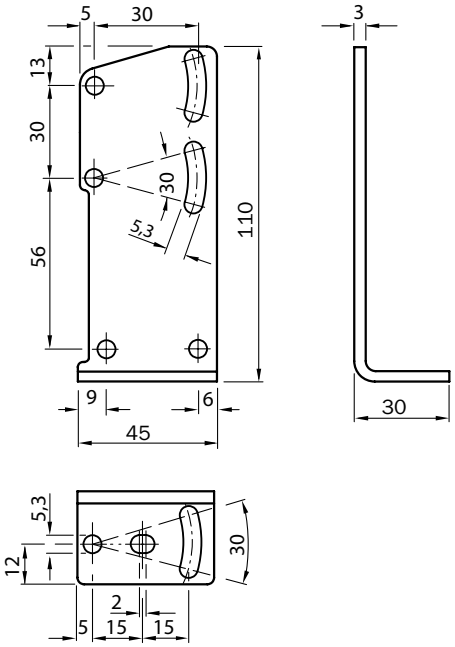

L

BEF-WK-W12

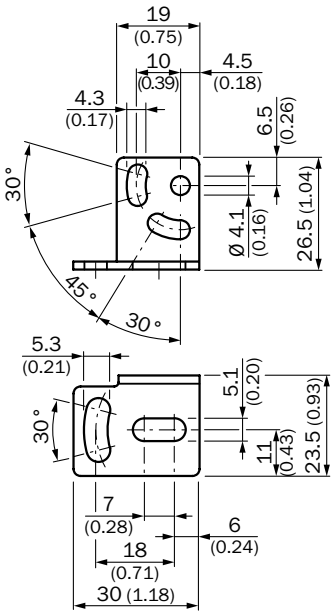

BEF-WK-W24

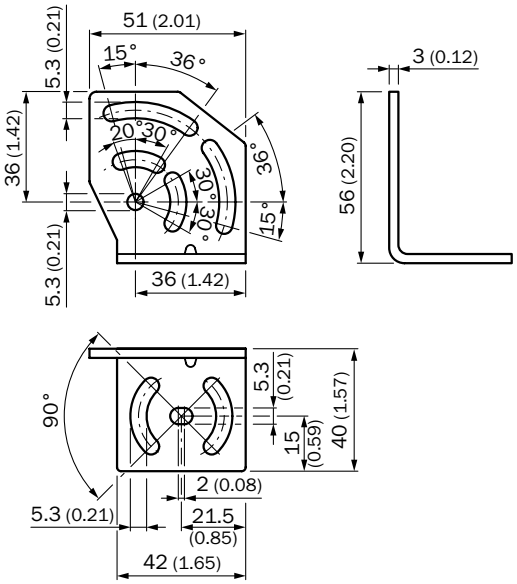

BEF-WK-WTR

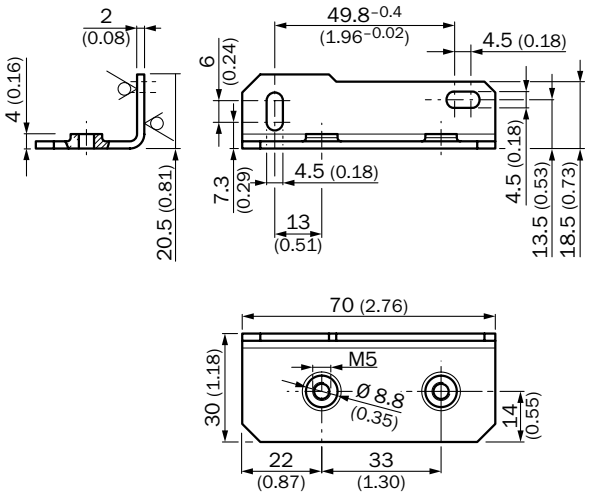

BEF-WLL170
BEF-WLL180

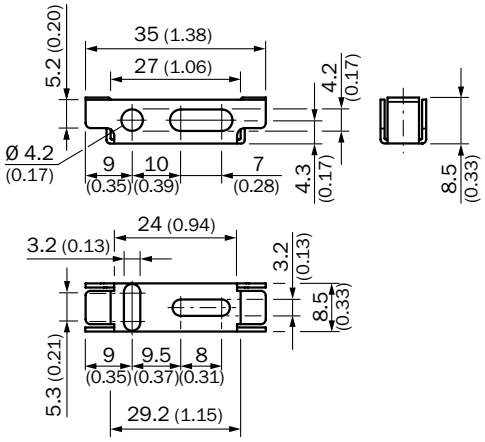

BEF-WN-M18
BEF-WN-M18N

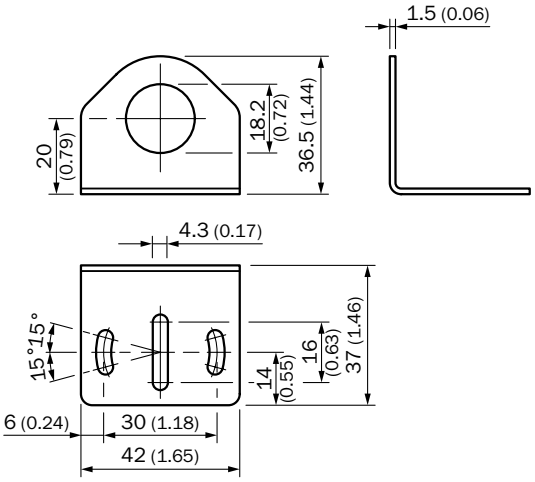

BEF-WN-OBW

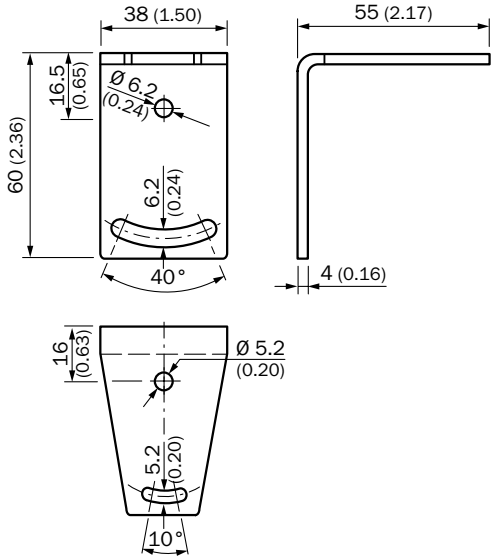

L

BEF-WN-REFX

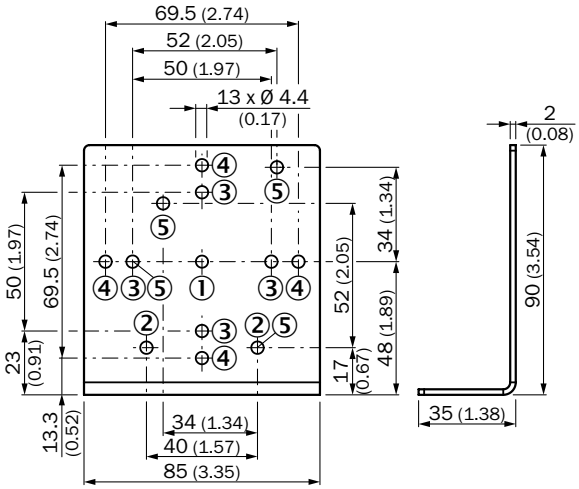

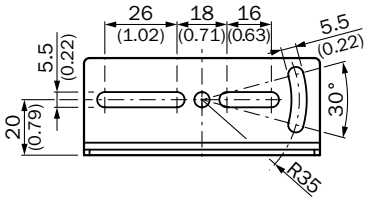

① C110A
② P250
③ PL20A
④ PL30A, PL80A
⑤ PL40A

BEF-WN-W100-S01

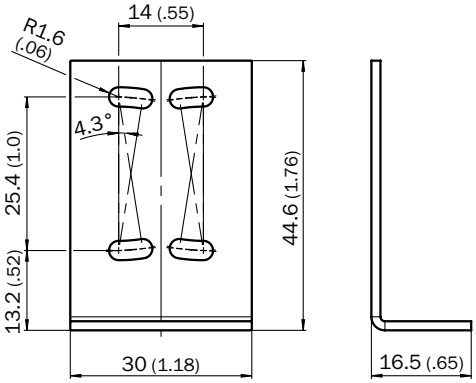

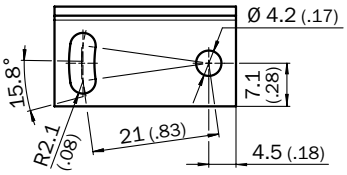

BEF-WN-W14

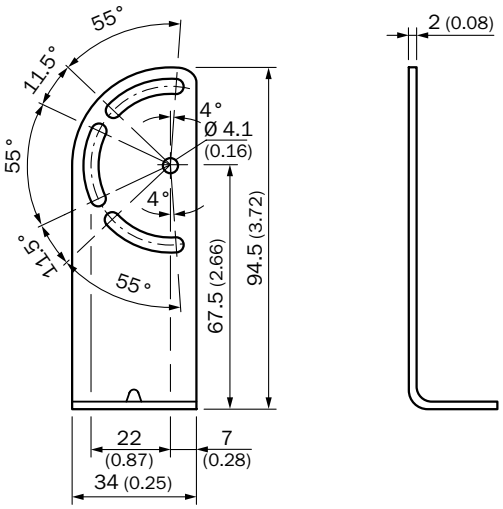

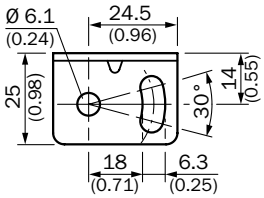

BEF-WN-W18

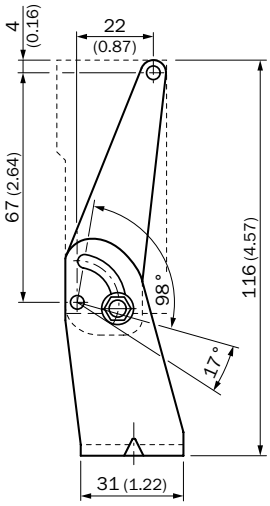

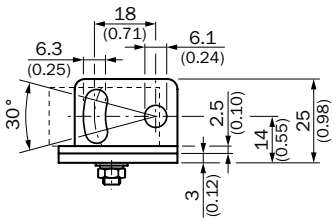

L

BEF-WN-W23

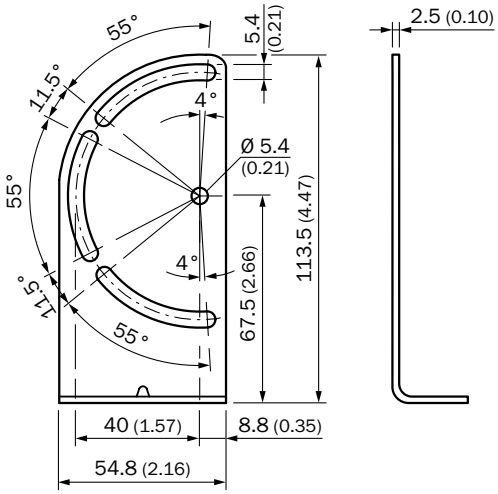

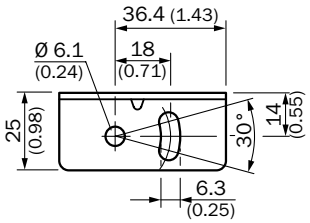

BEF-WN-W24

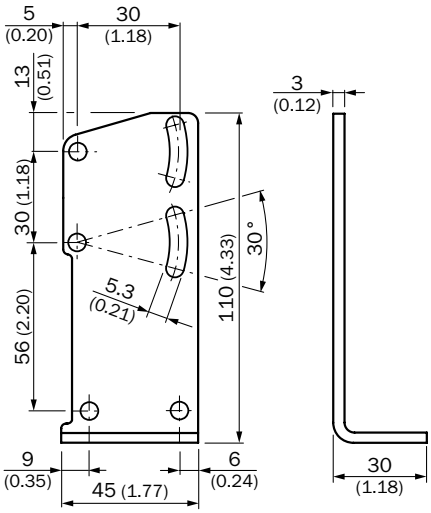

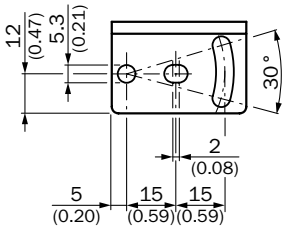

BEF-WN-W27

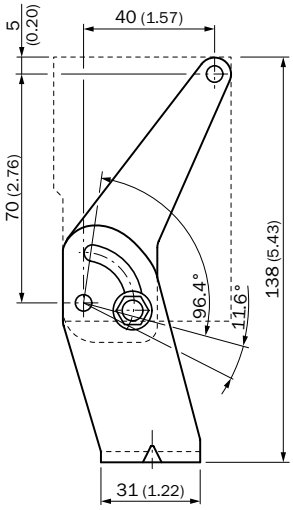

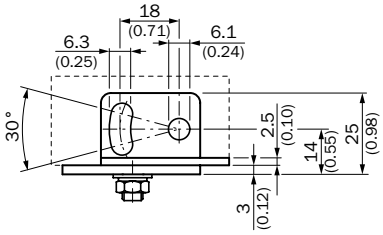

BEF-WN-W9-2

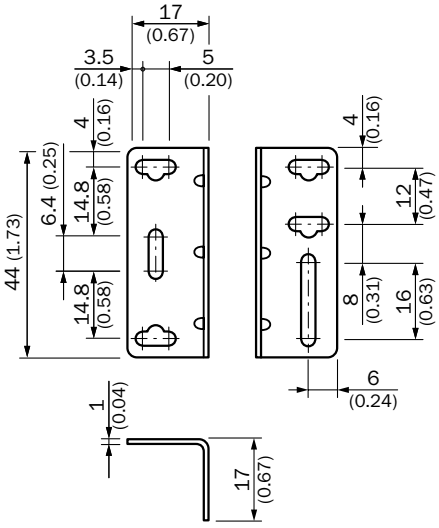

L

BEF-WN-WTR

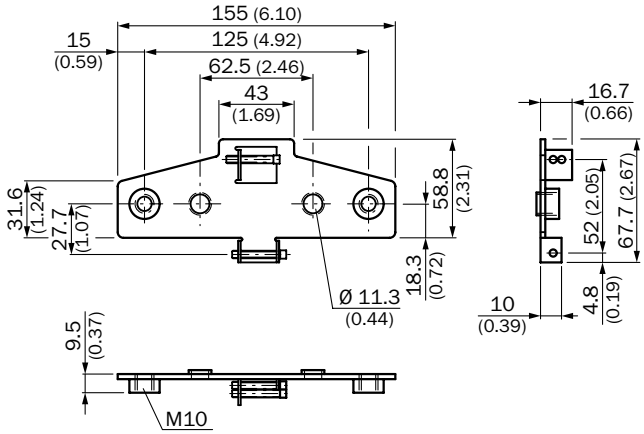

Dimensional drawings Masks

BL-100-10

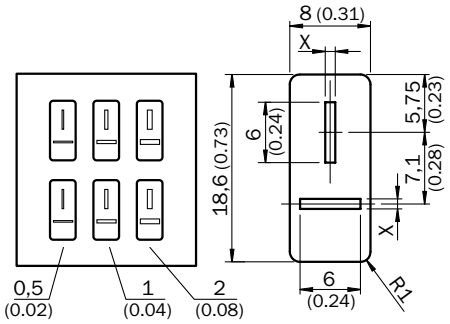

3 pairs included with apertures A, B, C.
Self-adhesive backing for easy mounting.
Apply stick-on mask to WS100 and WE100 front lens.
For small object detection or increasing indexing accuracy.

Sensing ranges with apertures applied:
A) Aperture 2.0 mm: Range = 4.0 m
B) Aperture 1.0 mm: Range = 2.0 m
C) Aperture 0.5 mm: Range = 1.0 m

BL-12-SKN

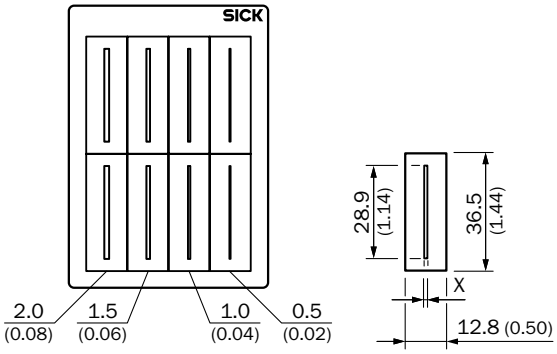

BL-9-2

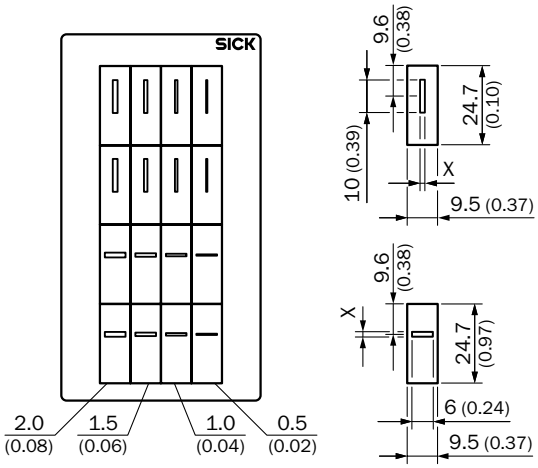

L

Dimensional drawings Device protection (mechanical)

BEF-G10WSG

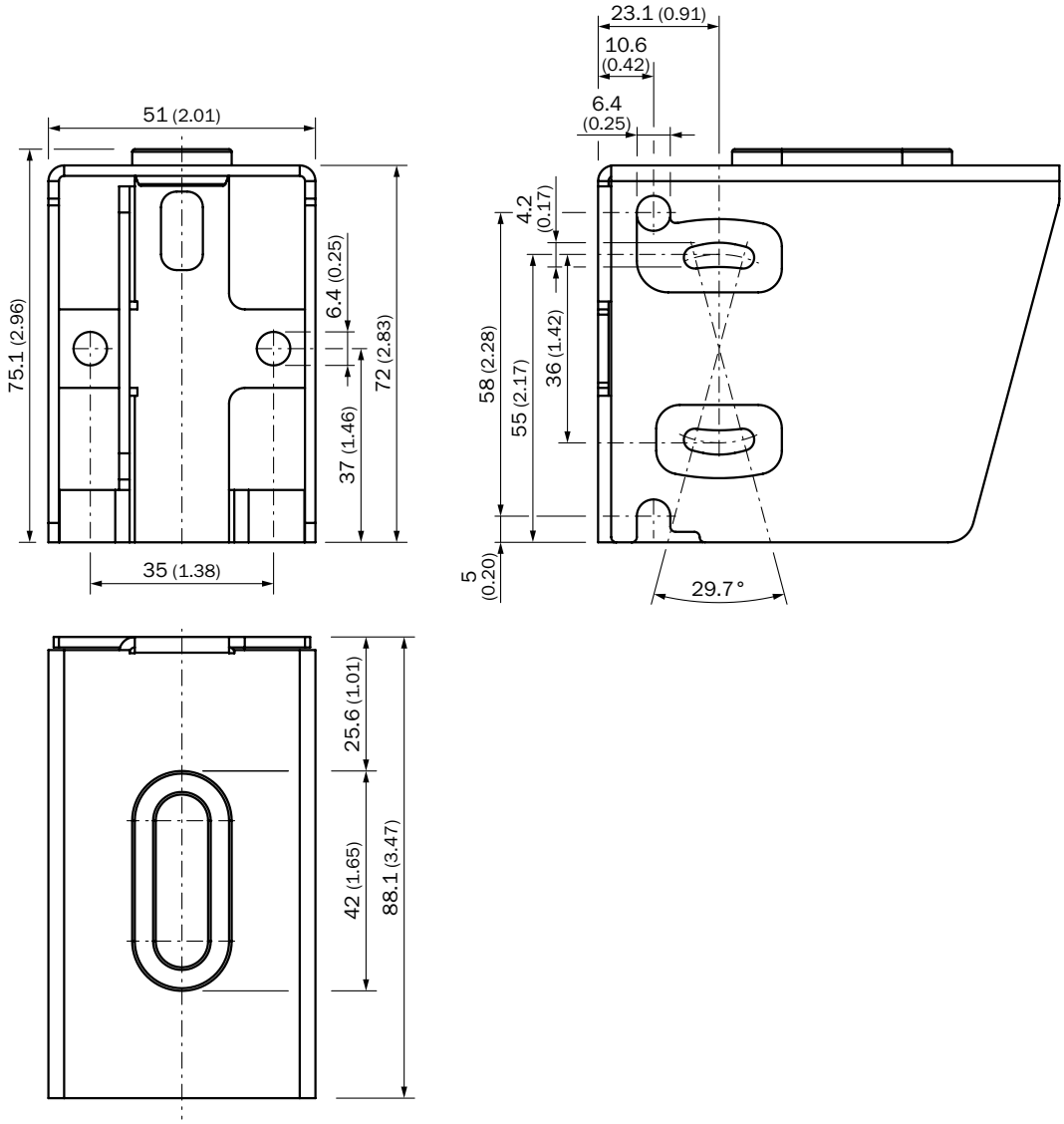

BEF-KP-W24

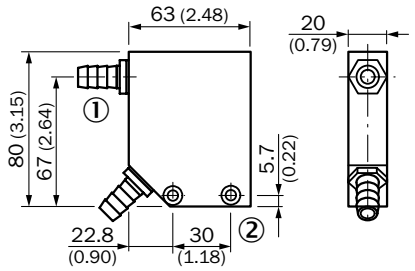

① Hose nozzle R1/4"
② Tapped hole for countersunk screw M5

L

BEF-PL80AWSG

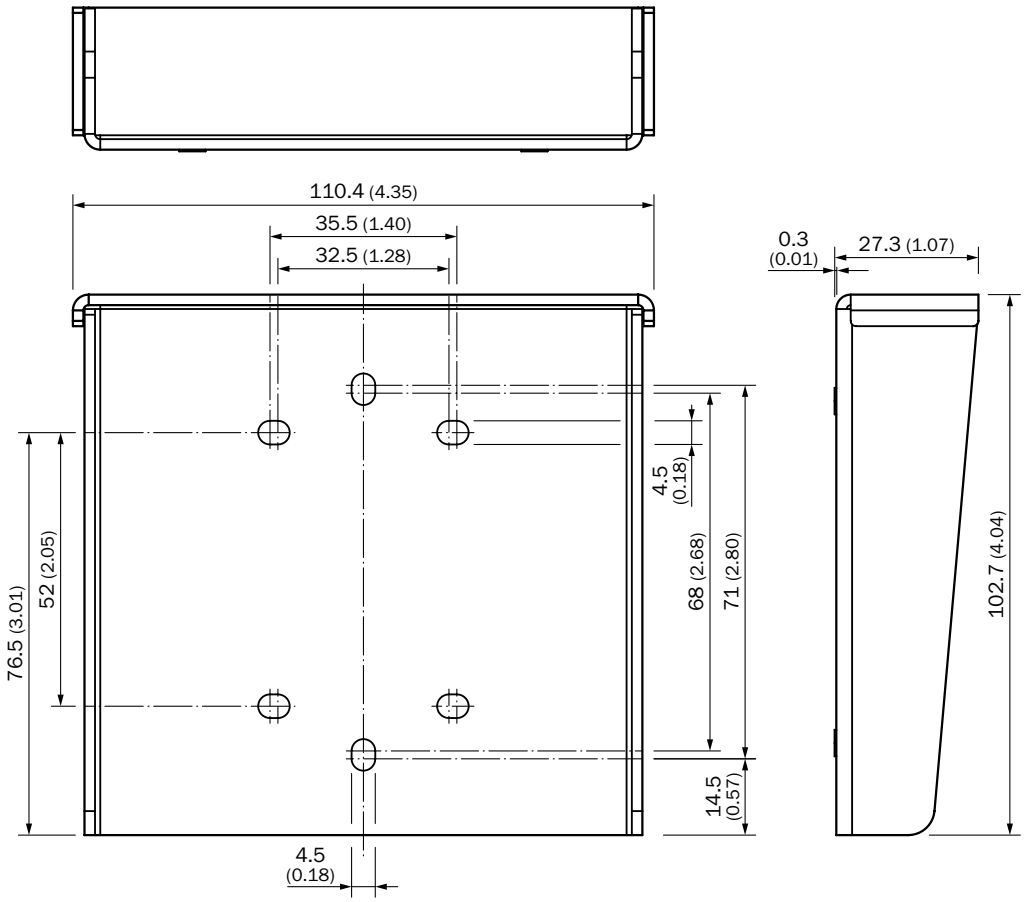

BEF-SG-W12-3

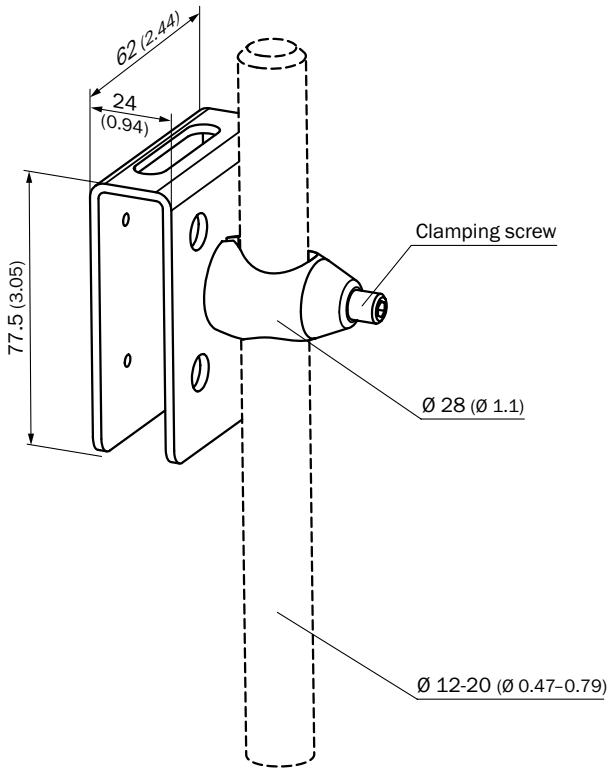

BEF-SG-W27

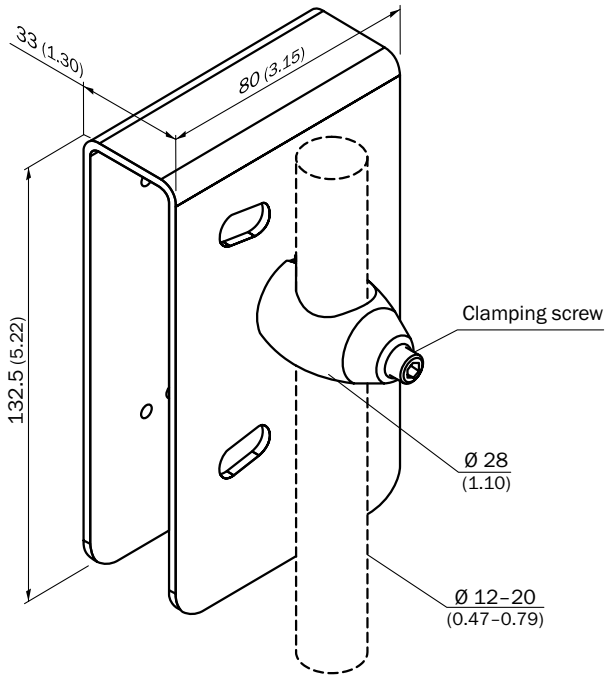

L

BEF-SW-W4S

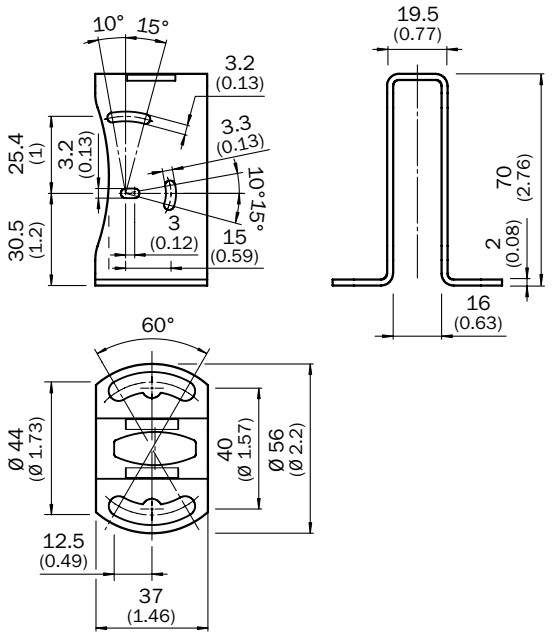

BEF-W2S-C

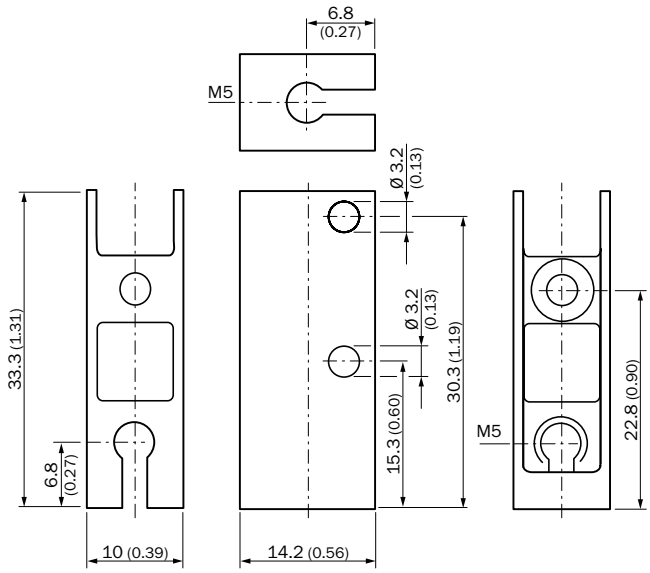

OBS-W24

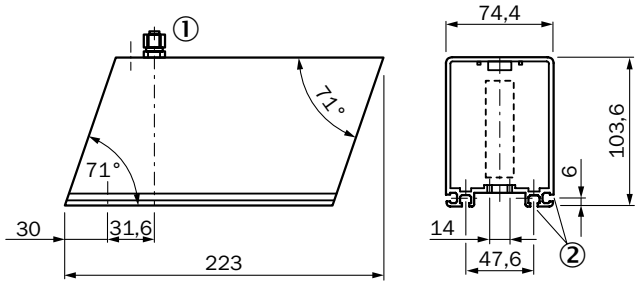

Alle Maße in mm

① Fast action screw fitting for hose internal diameter 6mm
② Running nut channel for M5 nut

OBW-KHS-M01

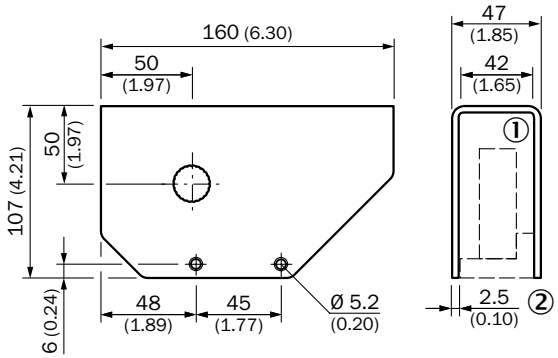

① Sensor
② Base plate with clamp supplied with unit

OBW-W24

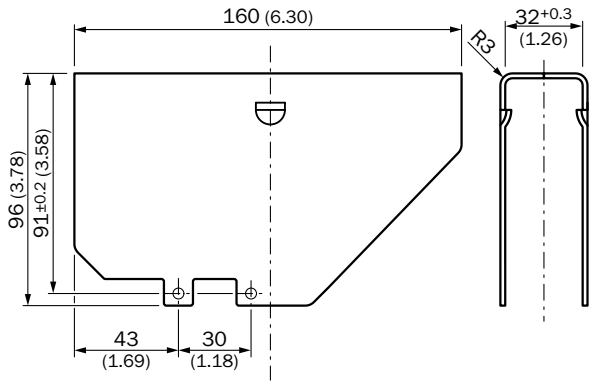

WSG1-01

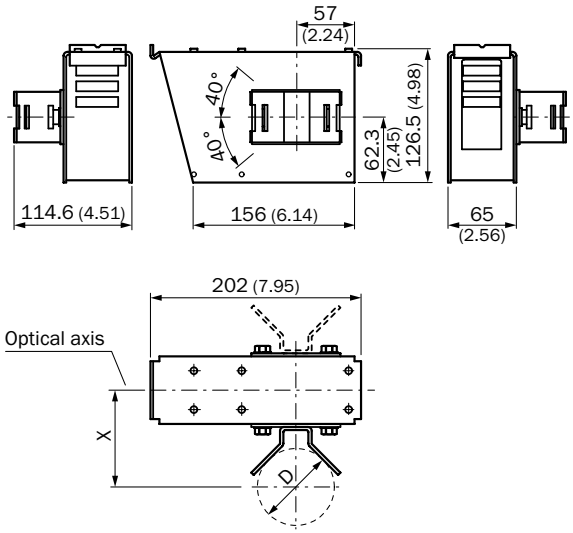

L

Dimensional drawings Terminal and alignment brackets

BEF-DKH-W12

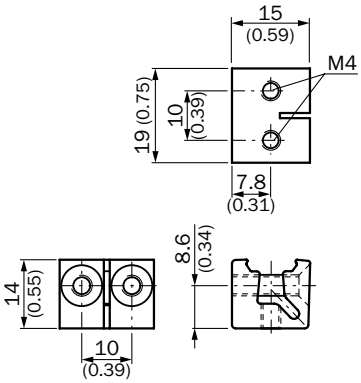

BEF-GH-MINI01

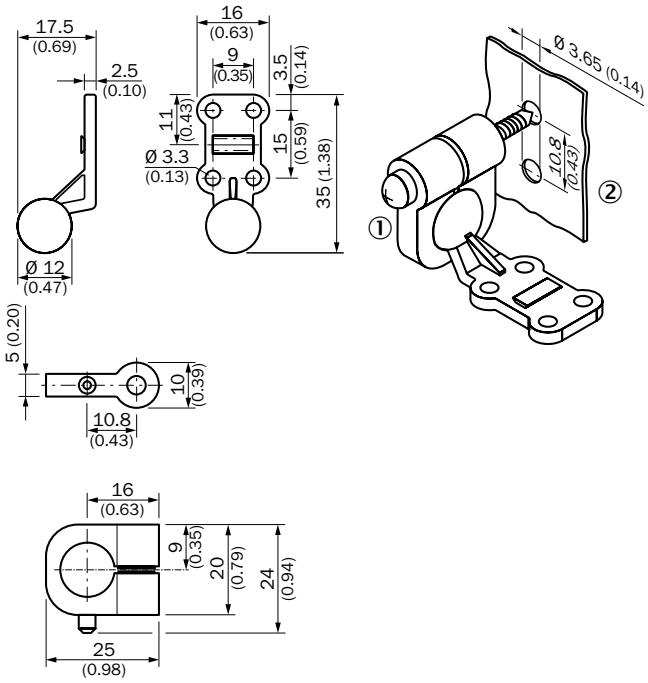

① Self-tapping screw Ø 4mm
② System or machine part

BEF-HA-M18R
BEF-WN-M18-ST02

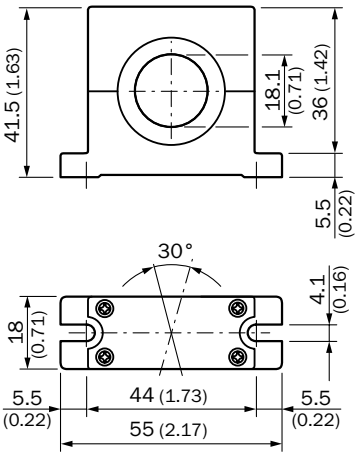

BEF-KH-M18

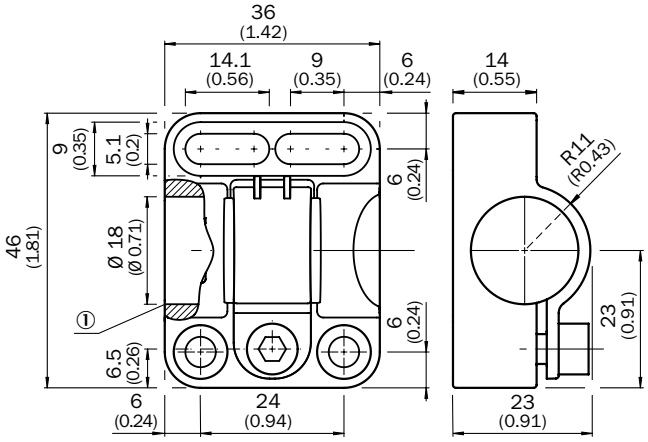

① Without fixed stop

L

BEF-KHF-M18

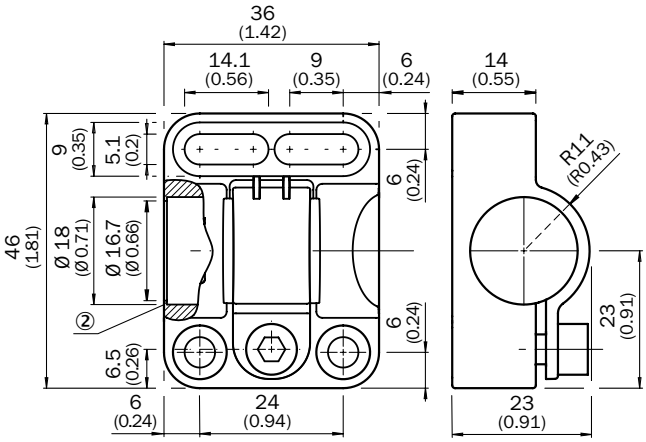

② With fixed stop

BEF-KH-W12

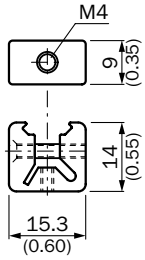

BEF-WN-MH15-1

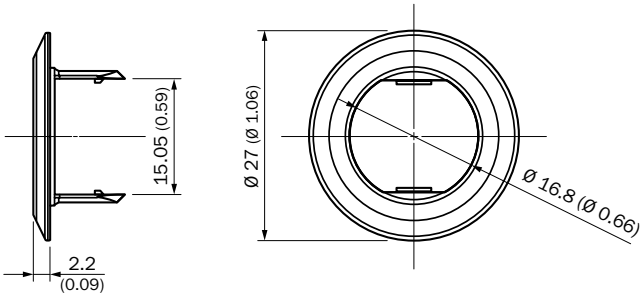

BEF-WN-MH15-2V

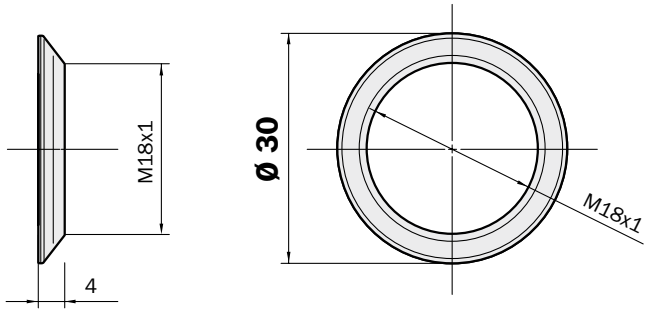

Dimensional drawings Other mounting accessories

BEF-MR18G-NA

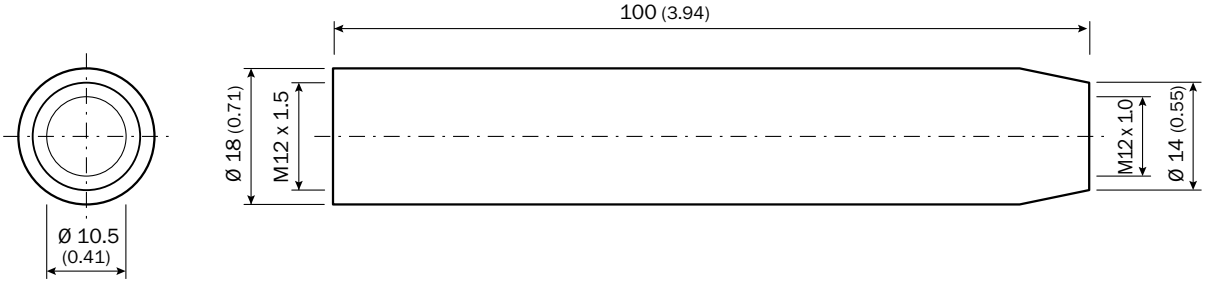

L

BEF-TO-GR18S

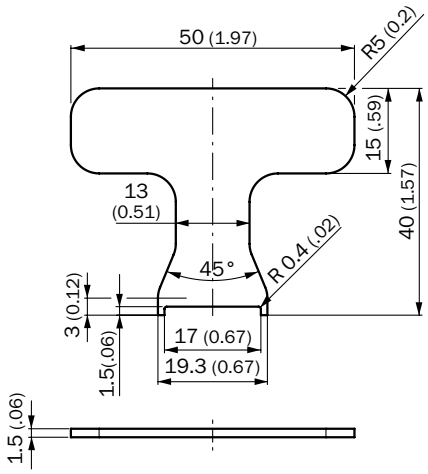

BF-EB01-W190

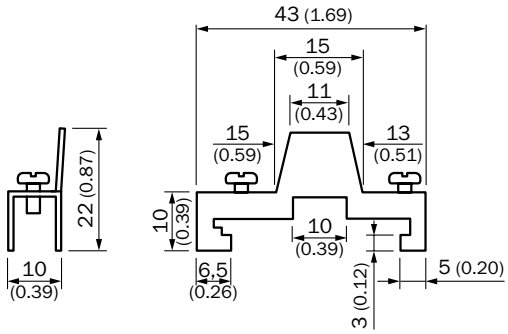

FC

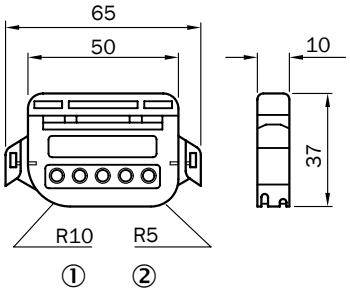

① Template for bend radius R10 mm, for end sleeve Ø 1.5 mm and Ø 2.5 mm
② Bend radius R5 mm

Dimensional drawings Universal bar clamp systems

BEF-HDSBR

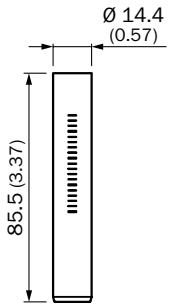

BEF-HDSF

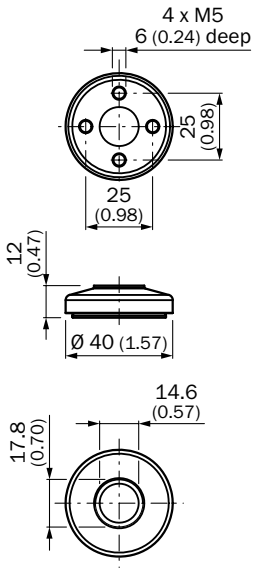

BEF-HDSTRG

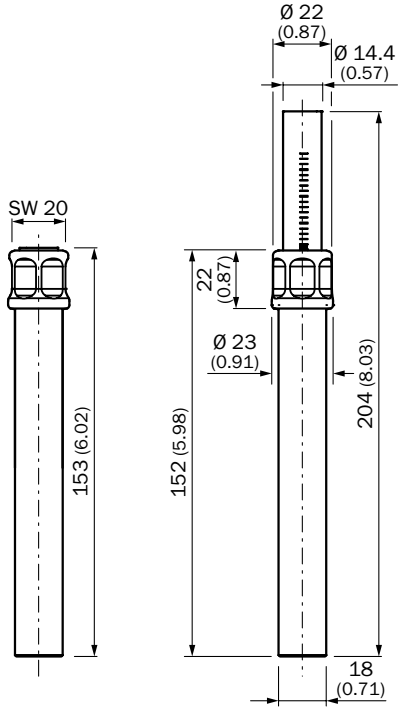

L

BEF-HDSTRGF

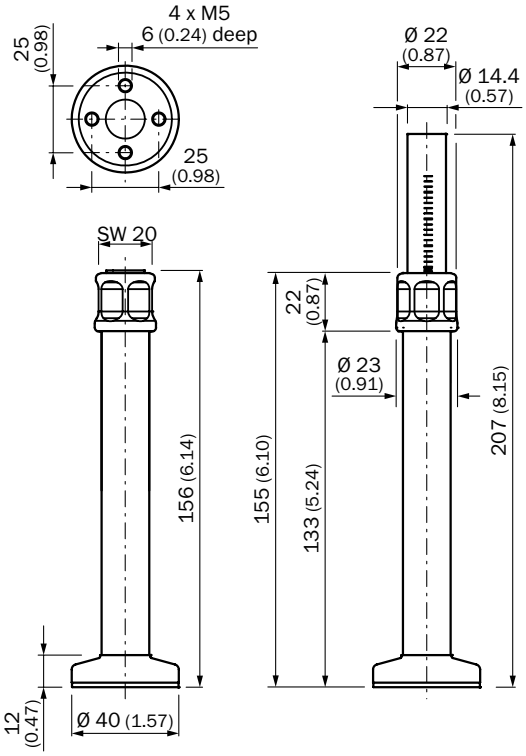

BEF-HDSTRK1WF

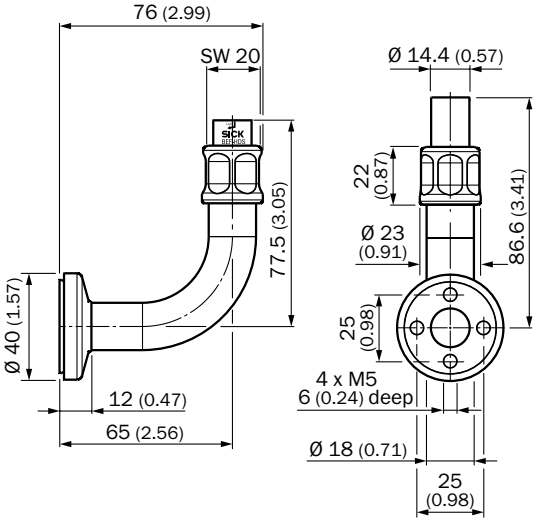

BEF-HDSTRL1GF

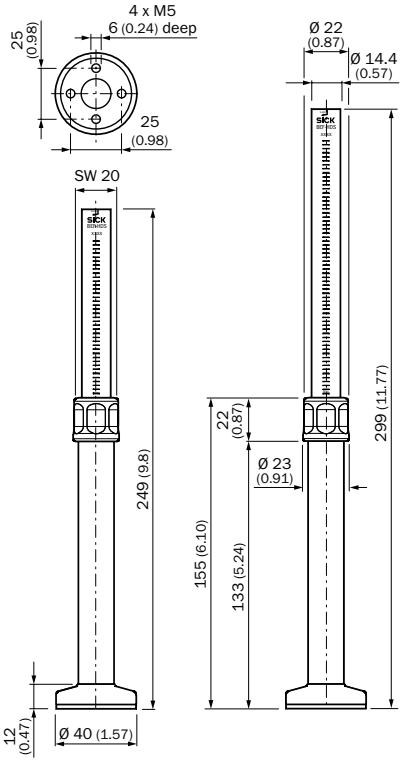

BEF-HDSTRW

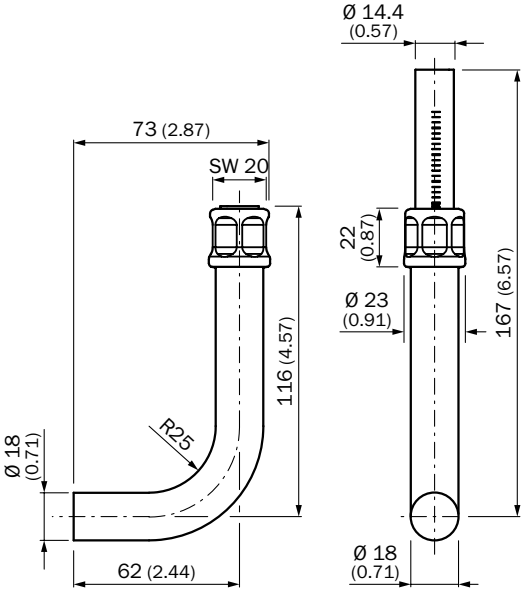

L

BEF-HDSTRWF

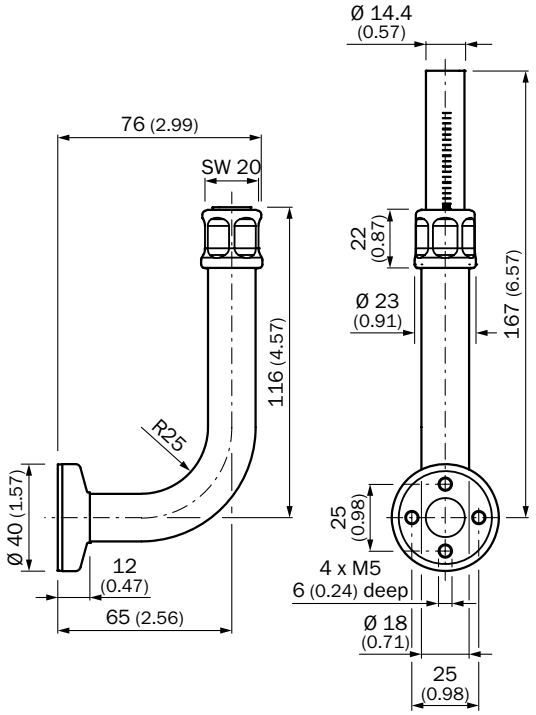

BEF-KHS-KH3

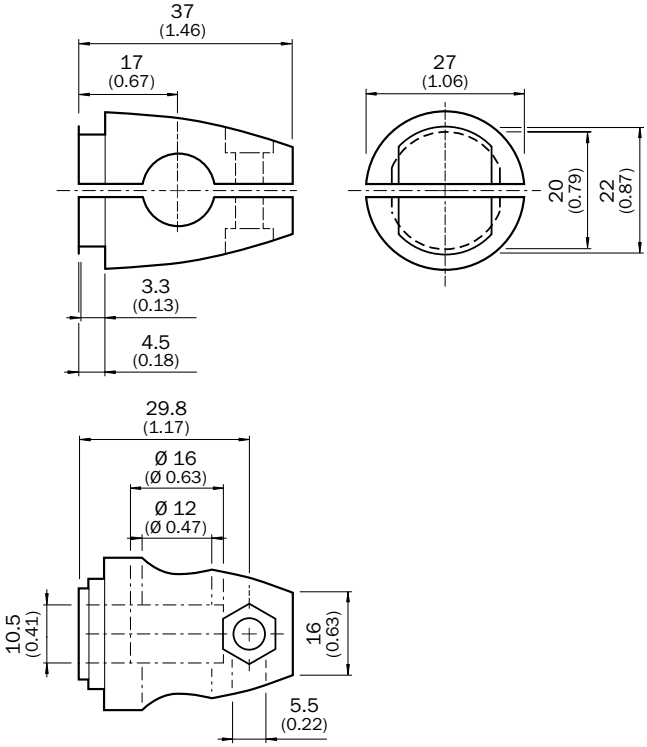

BEF-KHS-KH3N

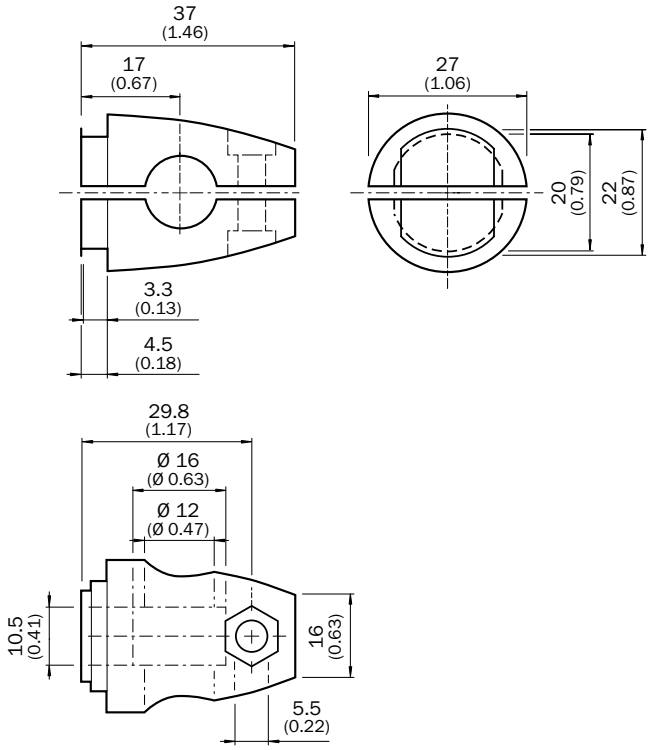

BEF-KHS-N02
BEF-KHS-N02N

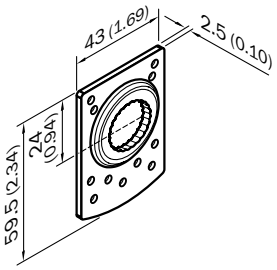

L

BEF-KHS-N03
BEF-KHS-N04N

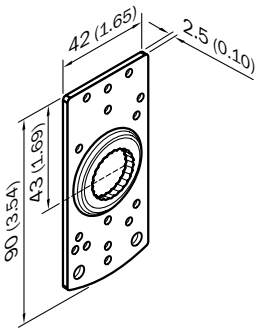

BEF-KHS-N04
BEF-KHS-N05N

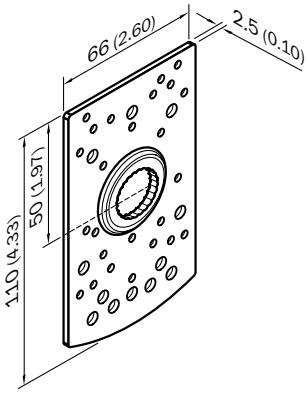

BEF-KHS-N05
BEF-KHS-N05N

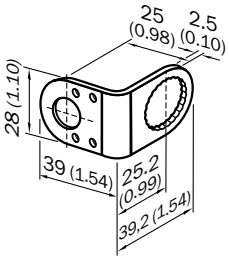

BEF-KHS-N06
BEF-KHS-N06N

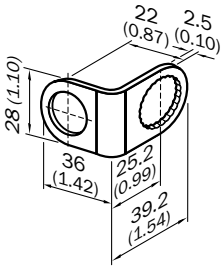

BEF-KHS-N07
BEF-KHS-N07N

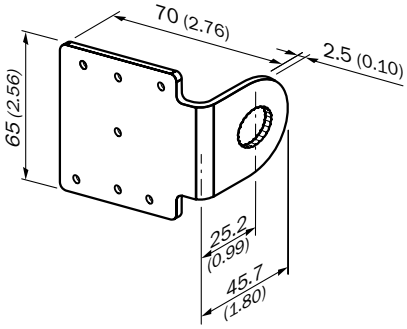

BEF-KHS-N08
BEF-KHS-N08N

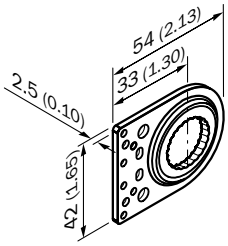

BEF-KHSQ12R01

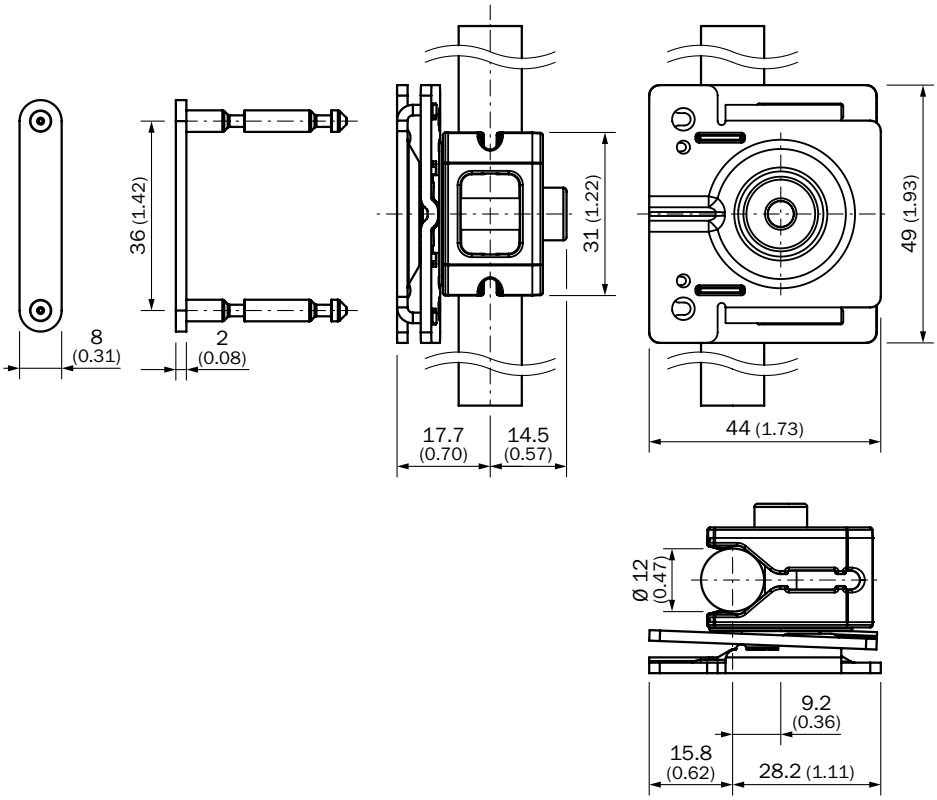

L

BEF-KHSQ12ZR01

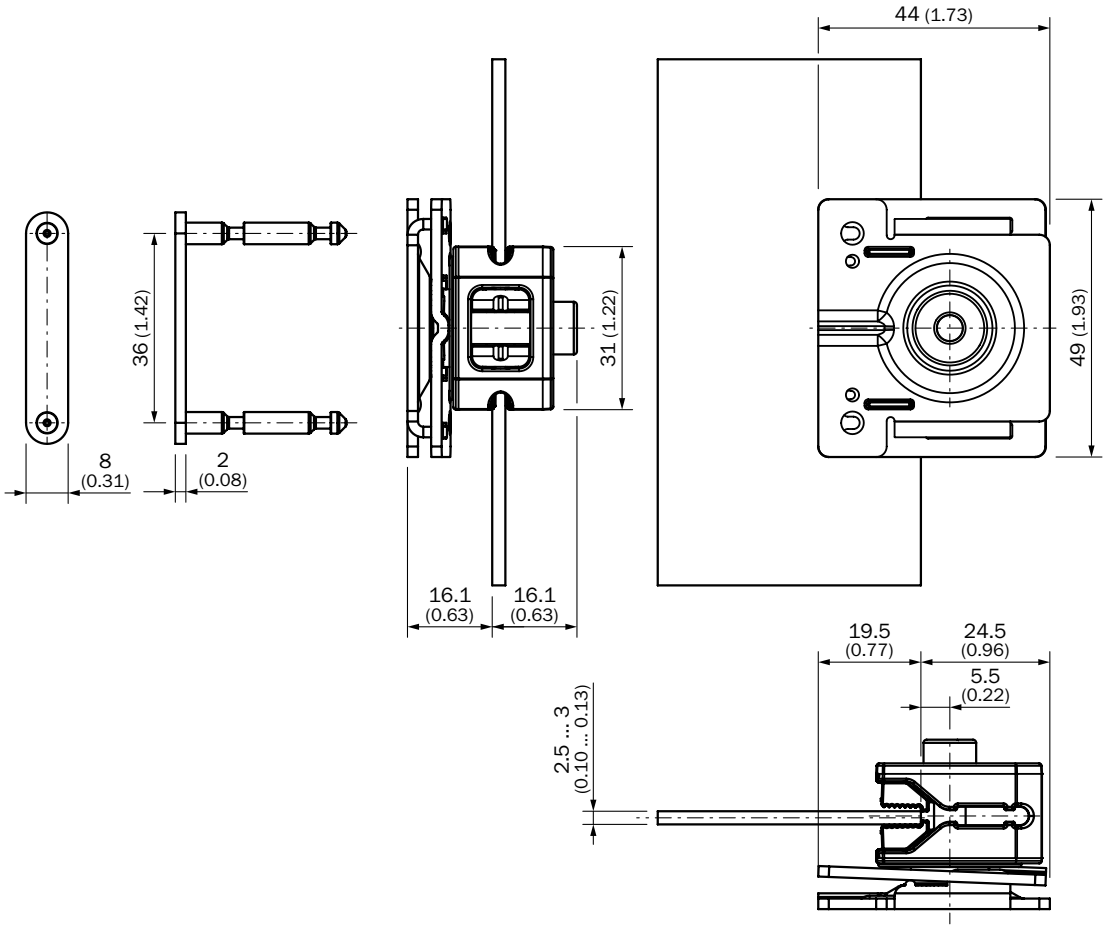

BEF-MS12G-A
BEF-MS12G-B
BEF-MS12G-NA
BEF-MS12G-NB

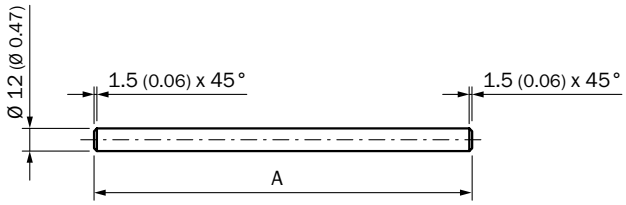

① BEF-MS12G-(N)A: A = 200 mm
② BEF-MS12G-(N)B: A = 300 mm

BEF-MS12L-A
BEF-MS12L-B
BEF-MS12L-NA
BEF-MS12L-NB

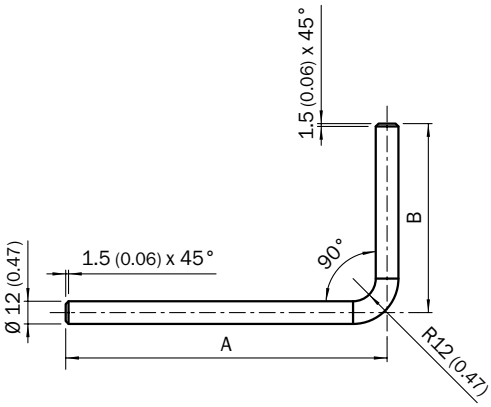

① BEF-MS12L-(N)A: A = 200 mm, B = 150 mm
② BEF-MS12L-(N)B: A = 250 mm, B = 250 mm

L

BEF-MS12Z-A, BEF-MS12Z-B, BEF-MS12Z-C, BEF-MS12Z-NA, BEF-MS12Z-NB

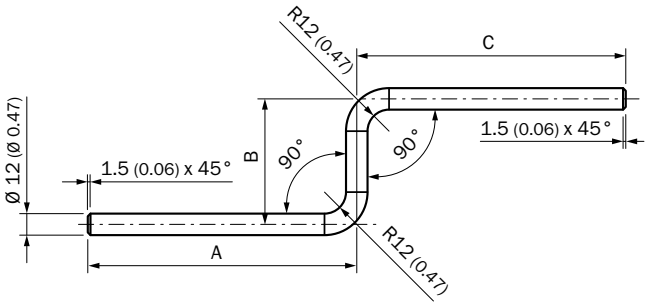

① BEF-MS12Z-(N)A: A = 150 mm, B = 70 mm, C = 150 mm
② BEF-MS12Z-(N)B: A = 150 mm, B = 70 mm, C = 250 mm

BEF-RMC-D12

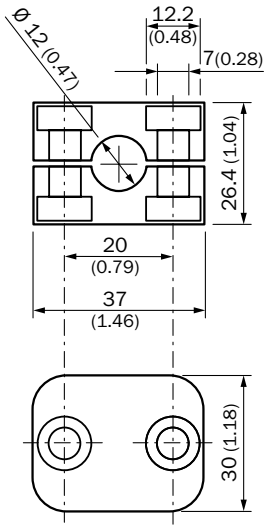

L

Reflectors

Reflectors

Angular

Figure	Material	Description	Model name	Part no.
	PMMA/ABS	Rectangular, screw connection, 47 mm x 47 mm	P250	5304812
		Rectangular, screw connection, 45 mm x 28 mm	P32	5314001
		Rectangular, screw connection, 25 mm x 21 mm	P40	5313923
		Rectangular, screw connection, 32 mm x 31 mm	P42	5314825
		Rectangular, screw connection, 31 mm x 8.5 mm	P45A	5320027
		Rectangular, screw connection, 96 mm x 96 mm	PL100	5321625
		Rectangular, self-adhesive, 146 mm x 14 mm	PL150	5315548
		Rectangular, screw connection, 175 mm x 34 mm	PL180E01	1013289
		Rectangular, screw connection, 38 mm x 15 mm	PL20A	1012719
		Rectangular, self-adhesive, 38 mm x 15 mm	PL21A	1015172
		Rectangular, screw connection, 56 mm x 28 mm	PL30A	1002314
		Rectangular, self-adhesive, 56 mm x 28 mm	PL31A	1002315
		Rectangular, screw connection, 37 mm x 56 mm	PL40A	1012720
		Rectangular, screw connection M3, countersunk screw head, 40 mm x 60 mm	PL40B	5320134
		Rectangular, screw connection, wrench size 48 mm	PL50A	1000132
		Rectangular, self-adhesive, wrench size 48 mm	PL51A	1001628
		Rectangular, with M6x14 threaded bolt and locking device, 75 mm x 45 mm	PL72-2	5322723

L

Figure	Material	Description	Model name	Part no.
	PMMA/ABS	Rectangular, screw connection, 80 mm x 80 mm	PL80A	1003865
		Rectangular, self-adhesive, 76 mm x 45 mm	PL81	5322795
	Plastic	Chemically resistant, screw connection, 47 mm x 47 mm	P250 CHEM	5321097

Fine triple reflectors

Figure	Material	Description	Model name	Part no.
	PMMA/ABS	Fine triple, screw connection, suitable for laser sensors, 47 mm x 47 mm	P250F	5308843
		Fine triple, self-adhesive, suitable for laser sensors, Ø 23 mm	P25F-1	5319385
		Reflector with microprismatic reflex tape REF-AC1000, suitable for laser sensors, see alignment note, 23 mm x 23 mm	P41F	5315128
		Fine triple, screw connection, suitable for laser sensors, Wrench size 48 mm	P55F	5313924
		Fine triple, screw connection, suitable for laser sensors, 18 mm x 18 mm	PL10F	5311210
		Fine triple, planar, suitable for laser sensors, 45 mm x 17 mm	PL15F	5313849
		Fine triple, self-adhesive, suitable for laser sensors, 27 mm x 17 mm	PL18F	5319994
		Fine triple, screw connection, suitable for laser sensors, 38 mm x 16 mm	PL20F	5308844
		Fine triple, screw connection, suitable for laser sensors, 56 mm x 28 mm	PL30F	5326523
		Fine triple, screw connection, suitable for laser sensors, 76 mm x 45 mm	PL81-1F	5325060
	Plastic	Fine triple, chemically resistant, screw connection, 18 mm x 18 mm	PL10F CHEM	5321636
		Fine triple, chemically resistant, screw connection, 20 mm x 32 mm	PL10FB-CHEM	5327722
		Fine triple, chemically resistant, screw connection, suitable for laser sensors, 16 mm x 38 mm	PL20F-CHEM	5326089

L

Reflective tape

Figure	Description	Model name	Part no.
	Self-adhesive, not suitable for photoelectric retro-reflective sensors with polarisation filter, length customisable by roll, 91.4 cm x 4.57 m)	REF-3290	5301885
	Self-adhesive, not suitable for photoelectric retro-reflective sensors with polarisation filter, dimensions customisable by roll, 91.4 cm x 4.57 m)	REF-3290-K	4018696
	With alignment mark, self-adhesive, customizable size by roll, 91.4 cm x 45.7 m)	REF-3930-K2	2057035
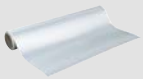	Self-adhesive, not suitable for photoelectric retro-reflective sensors with polarisation filter, customizable length by roll, 61 cm x 4.57 m)	REF-7610-0K4	5600079
	Self-adhesive, not suitable for photoelectric retro-reflective sensors with polarisation filter, customizable size by roll, 61 cm x 4.57 m)	REF-7610-K	4018617
	Suitable for laser sensors, self-adhesive, sheet, see alignment note, 225 mm x 225 mm	REF-AC1000	5319429
	Suitable for laser sensors, self-adhesive, cut, see alignment note, 28 mm x 28 mm	REF-AC1000-28	4067881
	Suitable for laser sensors, self-adhesive, cut, see alignment note, 56.3 mm x 56.3 mm	REF-AC1000-56	4063030
	Suitable for laser sensors, self-adhesive, cut, 20 pieces per pack, see alignment note, 73 mm x 73 mm	REF-AC1000-73P01	2061557
	Sheet, self-adhesive, not suitable for laser sensors, 225 mm x 225 mm	REF-APM	4025097
	Reflective tape “Diamond Grade”, self-adhesive, sheet, 749 mm x 914 mm	REF-DG	5320565
	Reflective tape “Diamond Grade”, self-adhesive, customizable size by sheet, 74.9 cm x 91.4 cm)	REF-DG-K	4019634
	Self-adhesive, 50 mm x 60 mm	REF-IRF-56	5314244
	Self-adhesive, customizable length by roll, 2.5 cm x 22.8 m)	REF-PLUS-25-K	4051184
	Self-adhesive, customizable length by roll, 5 cm x 22.8 m)	REF-PLUS-50-K	4051185
	Roll, self-adhesive, 100 mm x 22.8 m	REF-PLUS-R100	5319915
	Self-adhesive, customizable length by roll, 10 cm x 22.8 m)	REF-PLUS-R100-K	4071461
	Self-adhesive, roll, 25 mm x 22.8 m	REF-PLUS-R25	5319929
	Self-adhesive, roll, 50 mm x 22.8 m	REF-PLUS-R50	5319981
	Self-adhesive, customizable length by roll, 7.6 cm x 22.8 m)	REF-PLUS-R76	4071462
	100 pieces per pack, self-adhesive, 34 mm x 36 mm	REF-Plus-3436	5321337
	Roll, self-adhesive, 7.6 cm x 22.8 m)	REF-Plus-R76	5322215
	100 pieces per pack, red, self-adhesive, 25 mm x 50 mm	REF-Plus-RED-2550	5320285

L

Round

Figure	Material	Description	Model name	Part no.
	PMMA/ABS	Round, screw connection	C110A	5304549
		Round, plugable	C42-1	5313506
		Round, M5x9 threaded bolt	C42-2	5324281
		Round, screw connection	C64A	5325185
		Reflector, round, M4x8 threaded bolt	P25	5315172
		Round, pluggable	P25-2	5318969
		Round, planar	P34	5313922
		Round, M5x9 threaded bolt	P50-1	5322673
		Round, screw connection, wrench size 48 mm	P55	5318680
		Round, pluggable	PL22-1	1003546
		Round, self-adhesive	PL22-2	1003621
		Round, plugable for metal plates	PL22-3	1004488
		Round, pluggable	PL34-1	5322257

Special reflectors

Figure	Material	Description	Model name	Part no.
	Aluminum (anodized) / glass	Single-triple glass reflector for very high sensing ranges, focus: infinite, screw connection	OP60-00	1000141
		Single-triple glass reflector for very high sensing ranges, focus: 20 m, screw connection	OP60-20	1000136
		Single-triple glass reflector for high-temperature applications, screw connection	OP61-00	1002627
	HOT Thermoplast	High-temperature reflector, screw connection, 47 mm x 47 mm	P250H	5315124
	Plastic	Chemically resistant, screw connection, 38 mm x 15 mm	PL20 CHEM	5321089
	PMMA/ABS	Antifog, for prevention of moisture fogging on the reflection area, screw connection, 56 mm x 37 mm	PL40A Antifog	5322011

Figure	Material	Description	Model name	Part no.
	Plastic	Rectangular, screw connection M3, countersunk screw head, chemical resistent, 56 mm x 37 mm	PL40B-CHEM	5326088
	PMMA/ABS	Permanently heated, screw connection, wrench size 48 mm	PL50HK	1011545
		Regulated heated, screw connection; heating ON: T < 15 °C, wrench size 48 mm	PL50HS	1009871
	Anodised Aluminium / borosilicate glass	Oil-proof, solvent-resistant, screw connection	PL53A	1000382
	Stainless steel V4A (1.4404, 316L)	Stainless steel reflector, hygienic design, chemically resistant, Enclosure rating IP 69K, D12-adapter shaft, 25 mm x 25 mm	PLH25-D12	2063404
		Stainless steel reflector, hygienic design, chemically resistant, Enclosure rating IP 69K, M12-adapter thread, 25 mm x 25 mm	PLH25-M12	2063403
		Stainless steel reflector, wash-down design, chemically resistant, Enclosure rating IP 69K, screw connection, 14 mm x 14 mm	PLV14-A	2063405
	Anodised Aluminium / borosilicate glass	High-temperature reflector, glass, screw connection	SW50	1000131

Dimensional drawings Reflectors

C110A

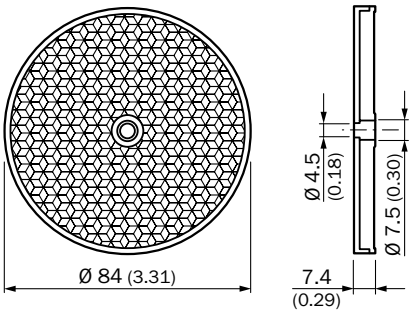

C42-1

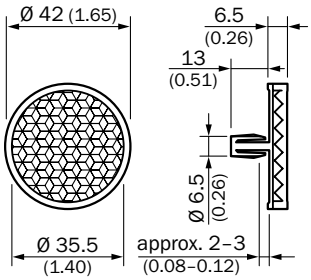

C42-2

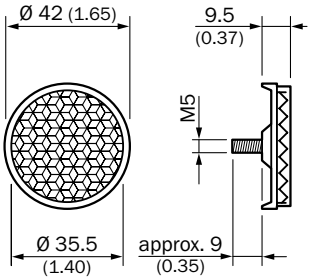

C64A

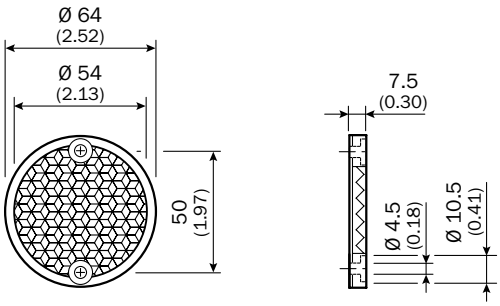

L

OP60-00, OP60-20, OP61-00

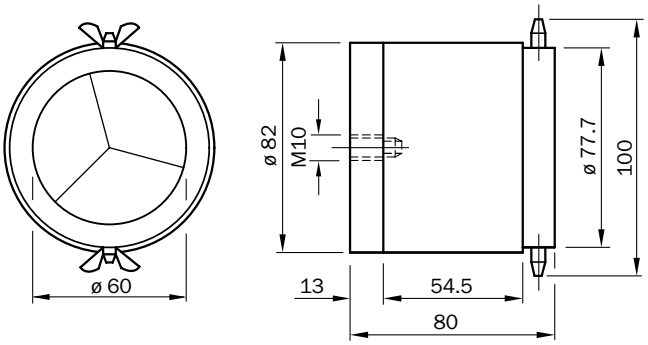

P25

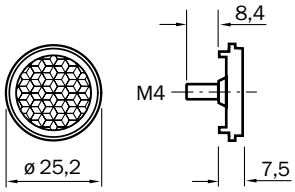

P25-2

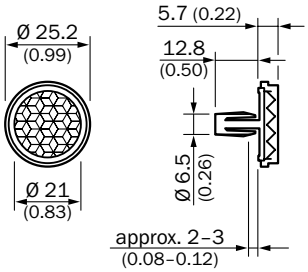

P250

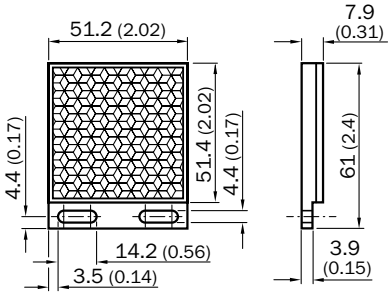

P250 CHEM

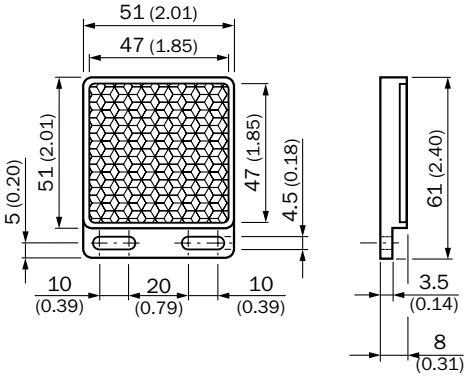

P250F

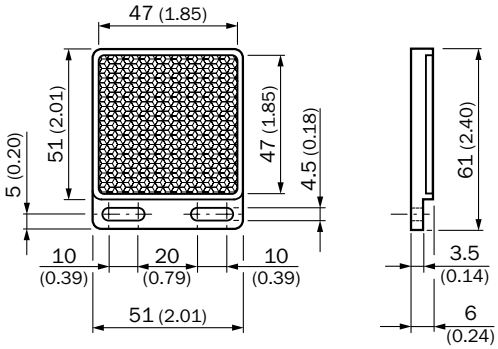

P250H

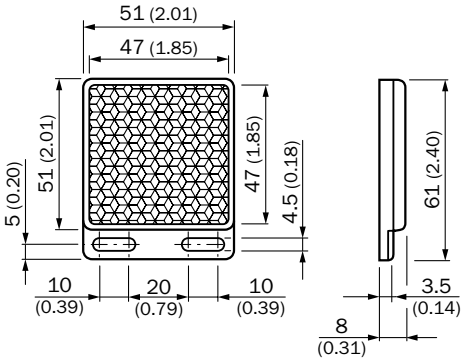

P25F-1

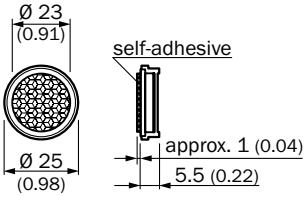

P32

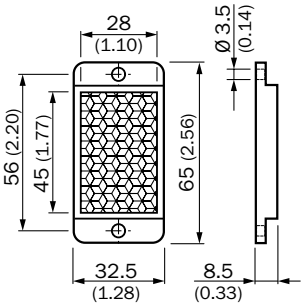

P34

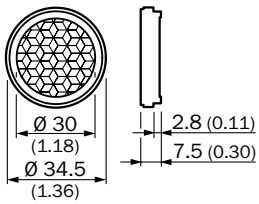

L

P40

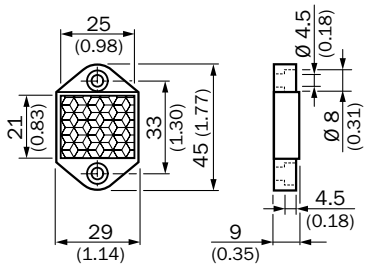

P41F

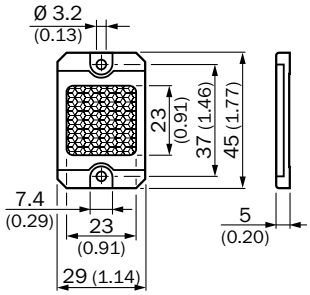

P42

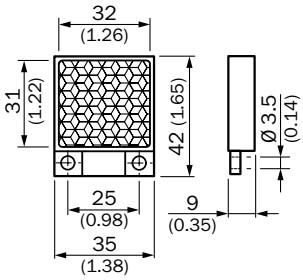

P45A

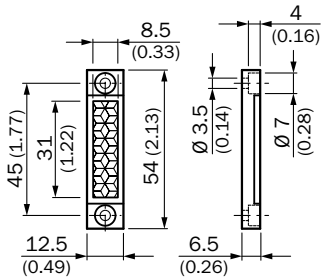

P50-1

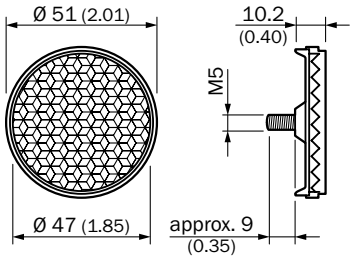

P55

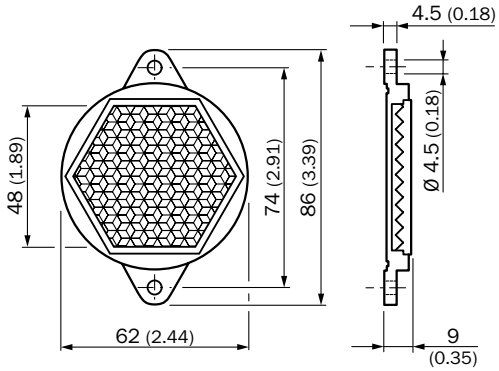

P55F

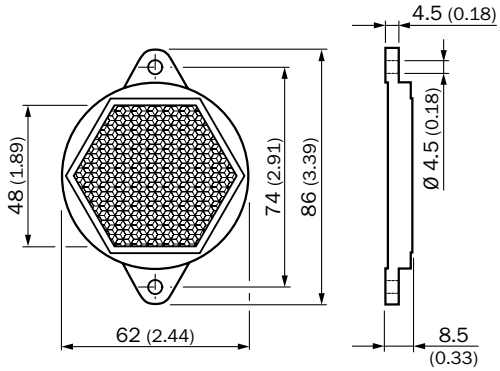

PL100

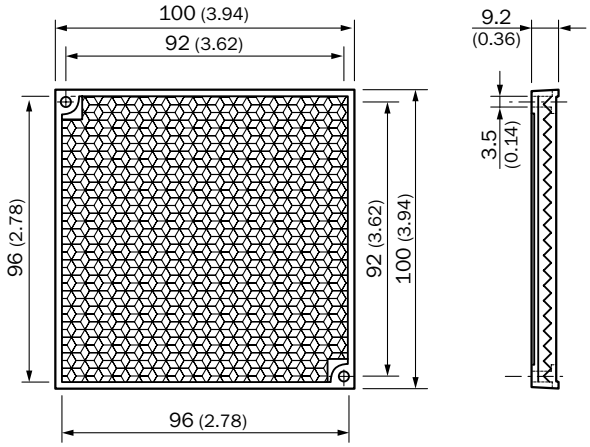

PL150

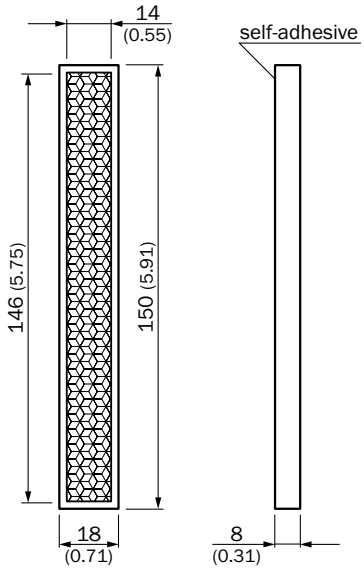

L

PL10F

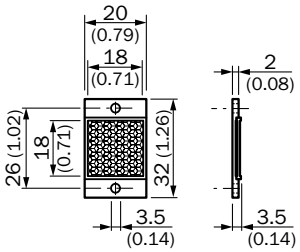

PL10F CHEM

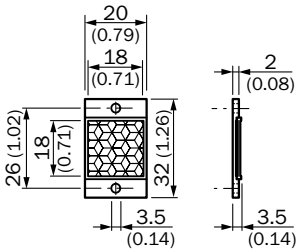

PL10FB-CHEM

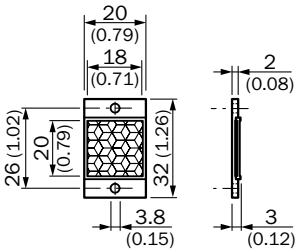

PL15F

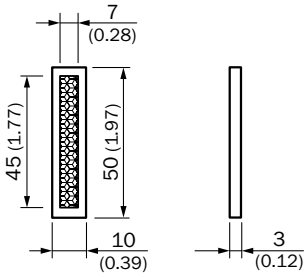

PL180E01

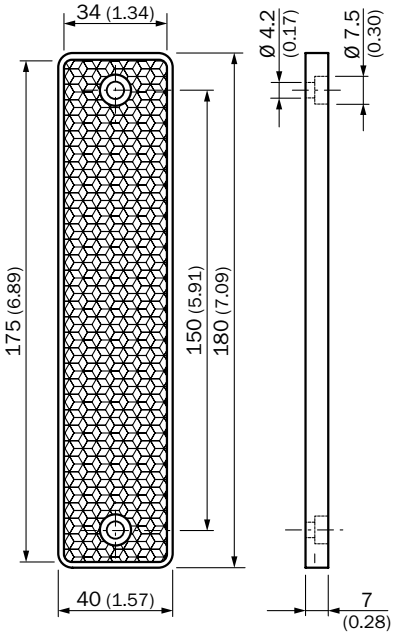

PL18F

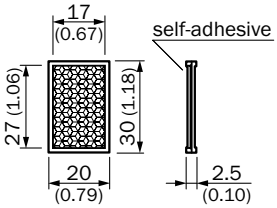

PL20 CHEM

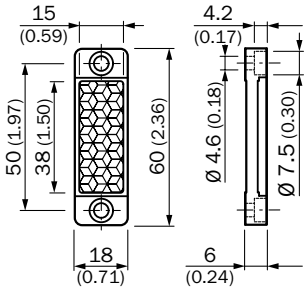

PL20A

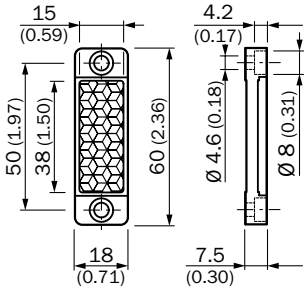

PL20F

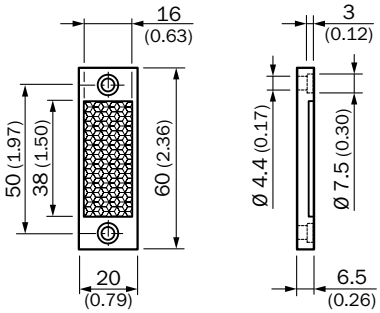

PL20F-CHEM

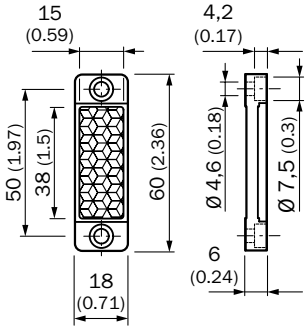

PL21A

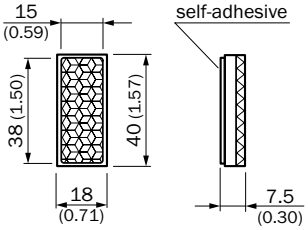

PL22-1

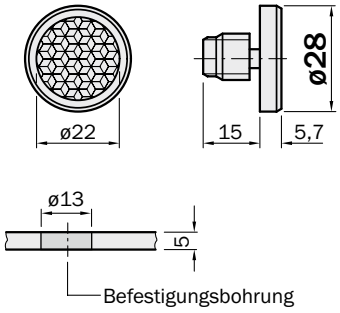

L

PL22-2

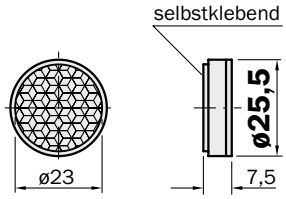

PL22-3

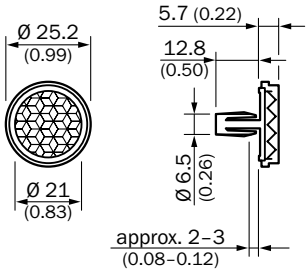

PL30A

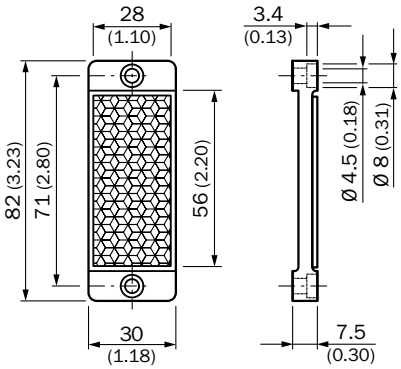

PL30F

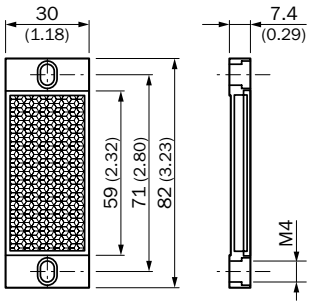

PL31A

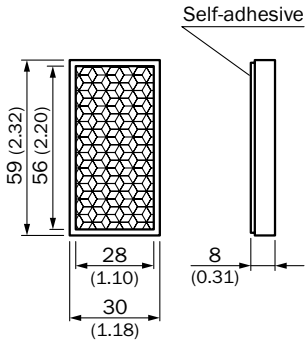

PL34-1

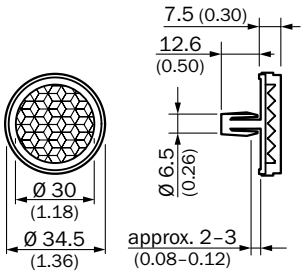

PL40A

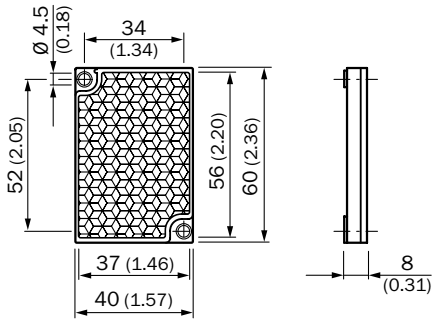

PL40A Antifog

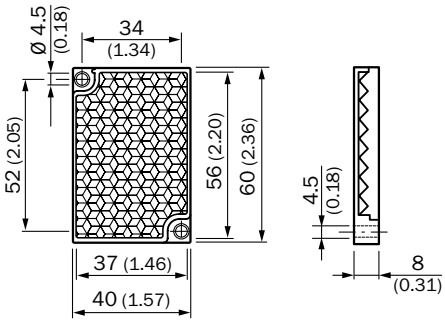

PL40B
PL40B-CHEM

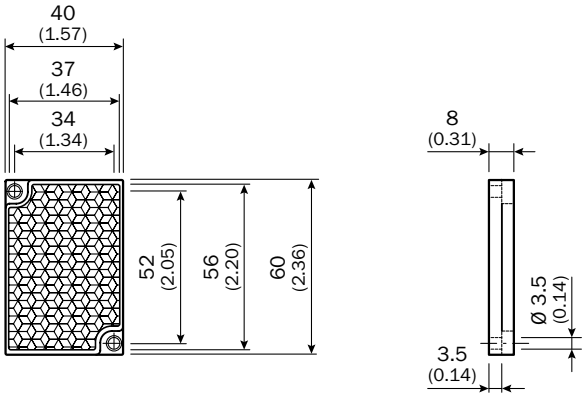

PL50A

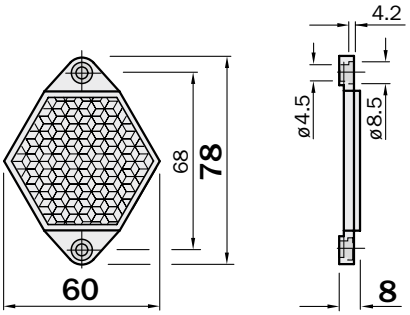

L

PL50HK
PL50HS

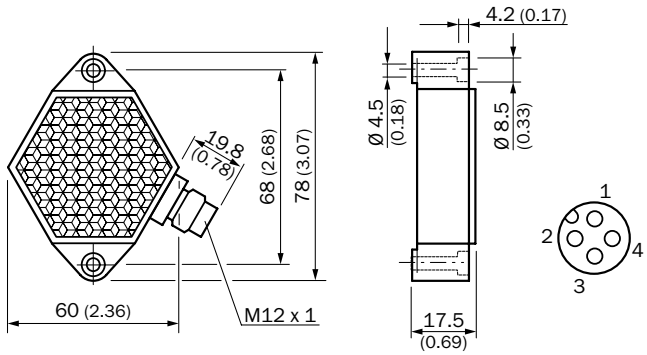

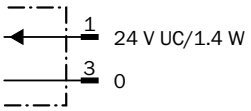

PL51A

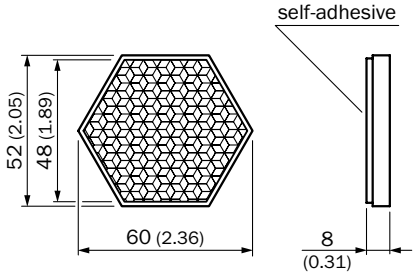

PL53A

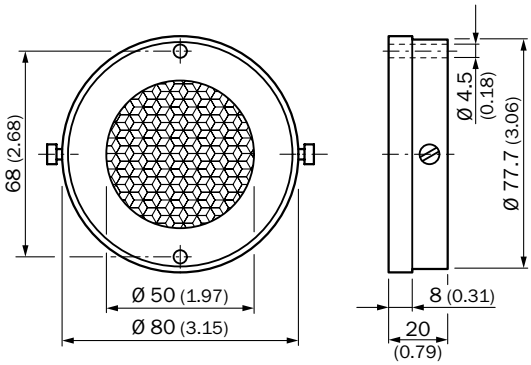

PL72-2

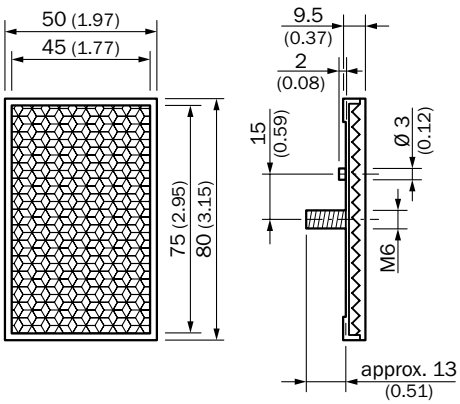

PL80A

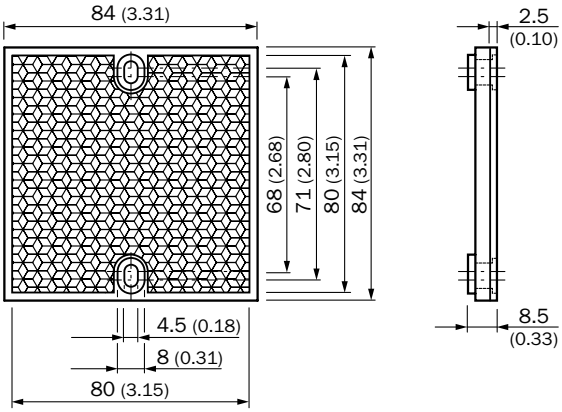

PL81

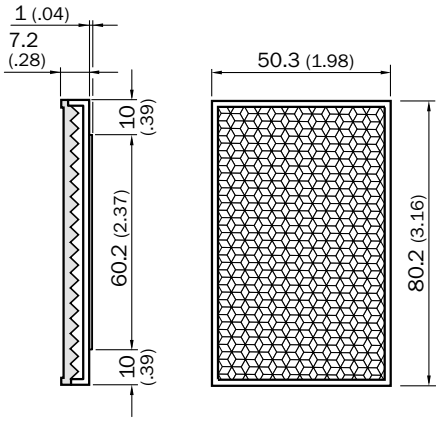

L

PL81-1F

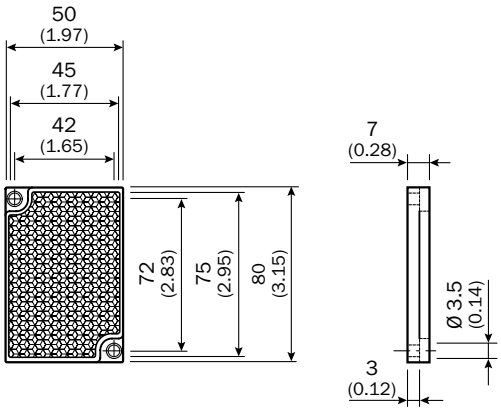

PLH25-D12

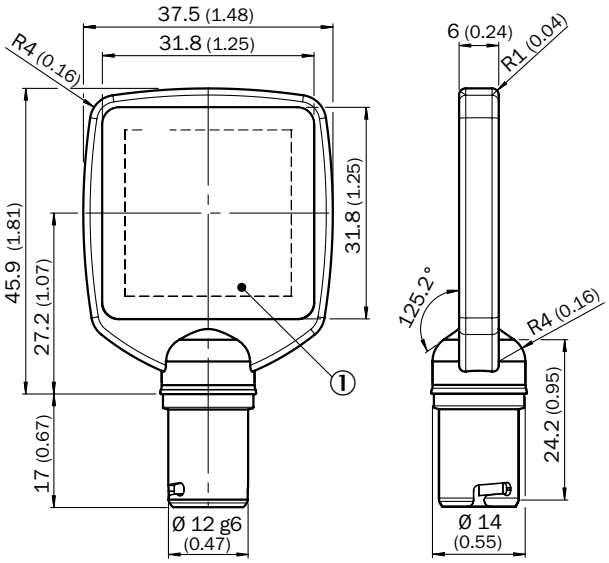

① Reflective area

PLV14-A

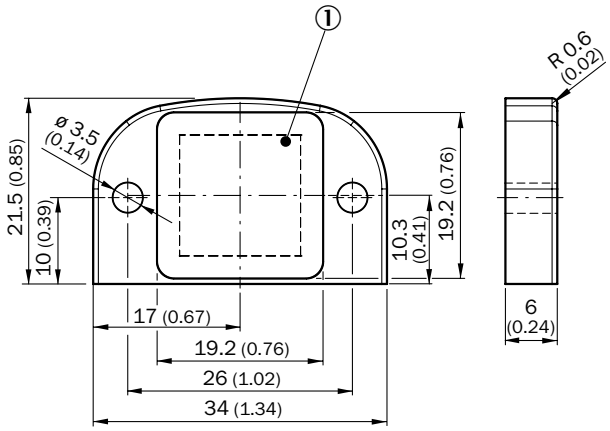

① Reflective area

REF-3290

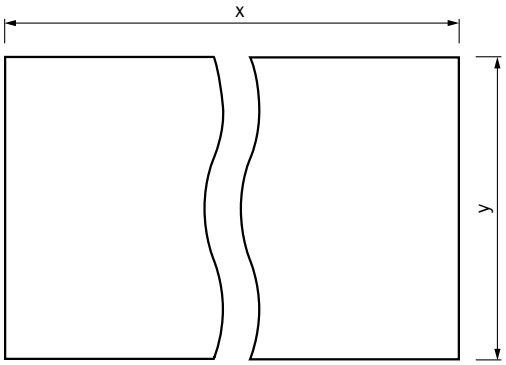

① X = 91.4 cm
② Y = 4.57 m

REF-3290-K
REF-AC1000-28
REF-PLUS-R100-K

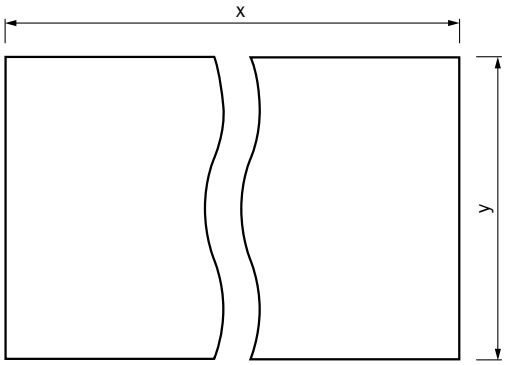

① X = 91.4 cm
② Y = 4.57 m

REF-7610-0K4

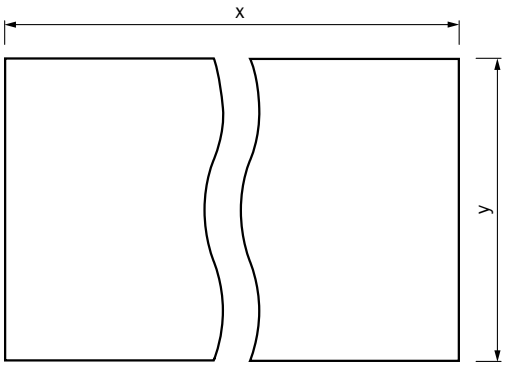

① X = 61 cm
② Y = 4.57 m

L

REF-7610-K

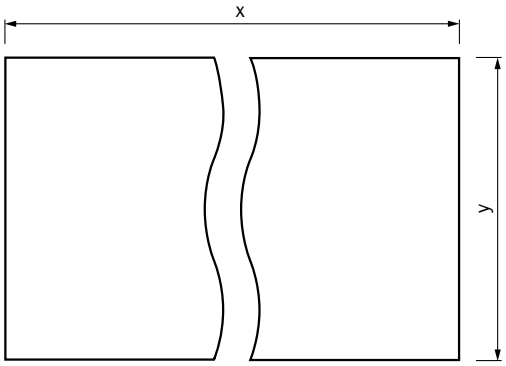

① X = 61 cm
② Y = 4.57 m

REF-AC1000

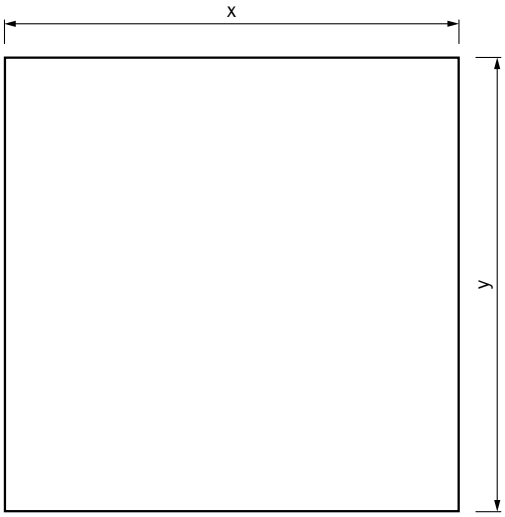

① X = 225 mm
② Y = 225 mm

REF-AC1000-56

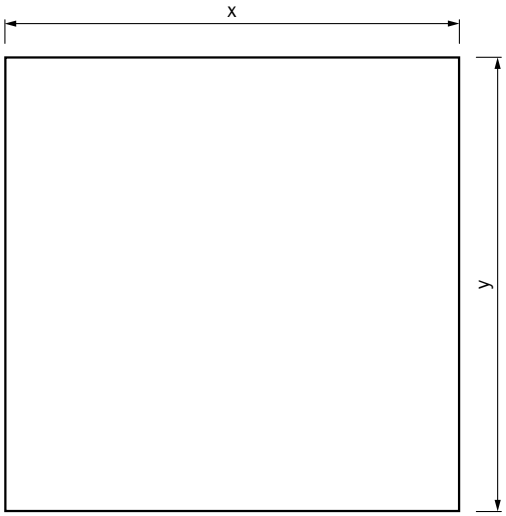

① X = 56,3 mm
② Y = 56,3 mm

REF-AC1000-73P01

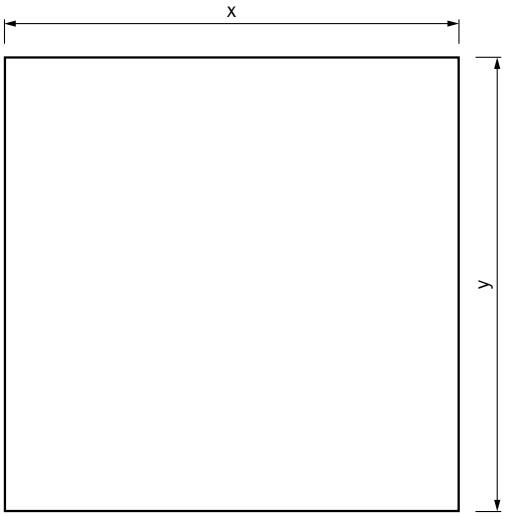

① X = 73 mm
② Y = 73 mm

L

REF-APM

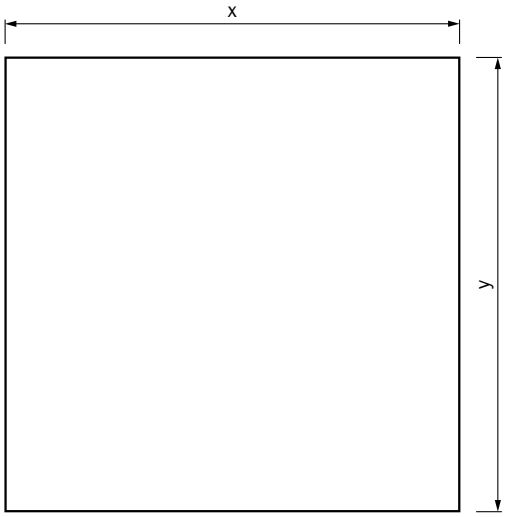

① X = 225 mm
② Y = 225 mm

REF-DG

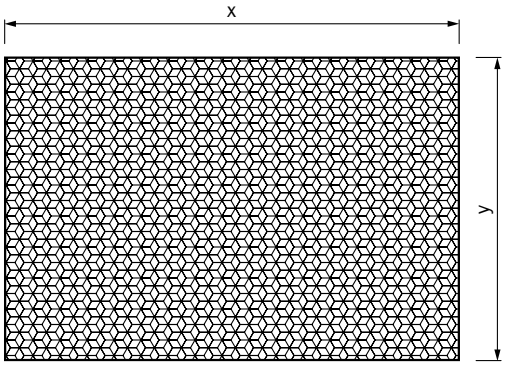

① X = 74.9 cm
② Y = 91.4 cm

REF-DG-K

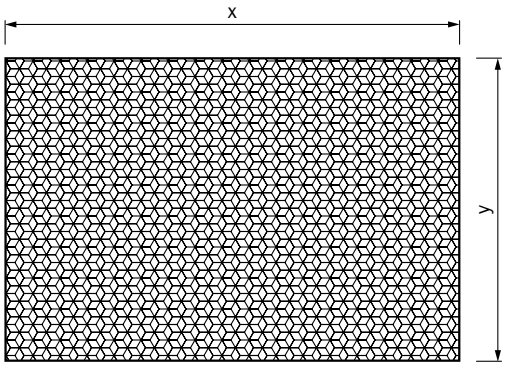

① X = 74.9 cm
② Y = 91.4 cm

REF-IRF-56

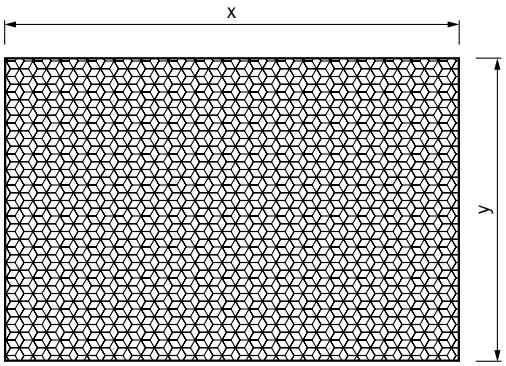

① X = 50 mm
② Y = 60 mm

REF-PLUS-25-K
REF-PLUS-R25

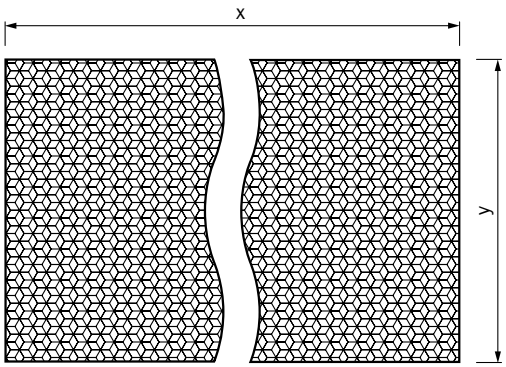

① X = 2.5 cm
② Y = 22.8 m

REF-PLUS-R100

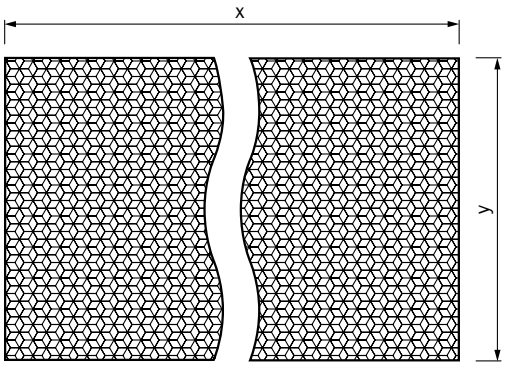

① X = 100 mm
② Y = 22.8 m

L

REF-PLUS-R50

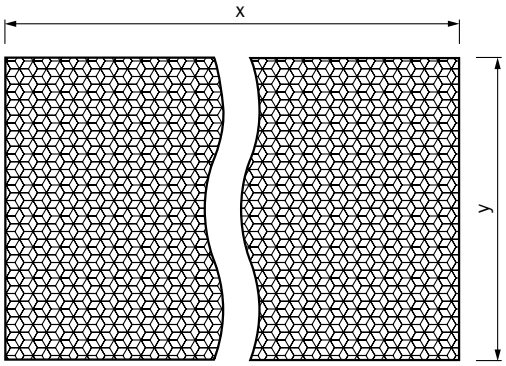

① X = 50 mm
② Y = 22.8 m

REF-PLUS-R76
REF-Plus-R76

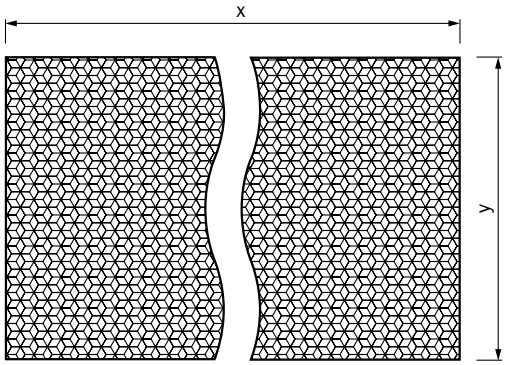

① X = 7.6 cm
② Y = 22.8 m

REF-Plus-3436

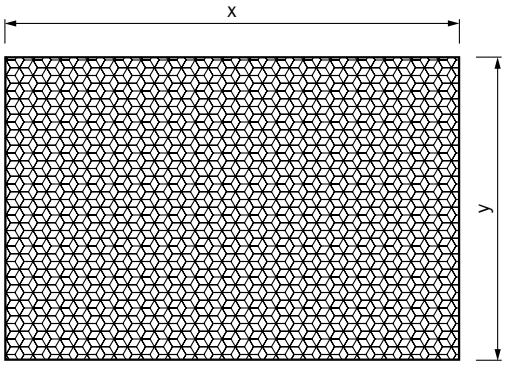

① X = 34 mm
② Y = 36 mm

REF-Plus-RED-2550

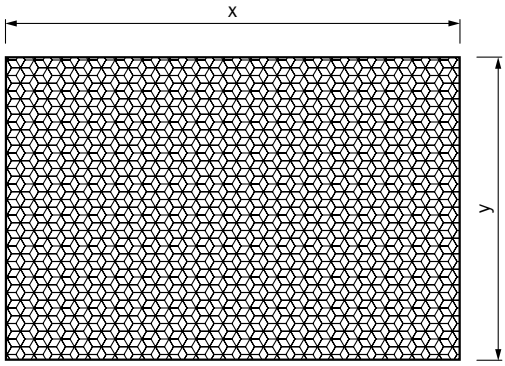

① X = 25 mm
② Y = 50 mm

SW50

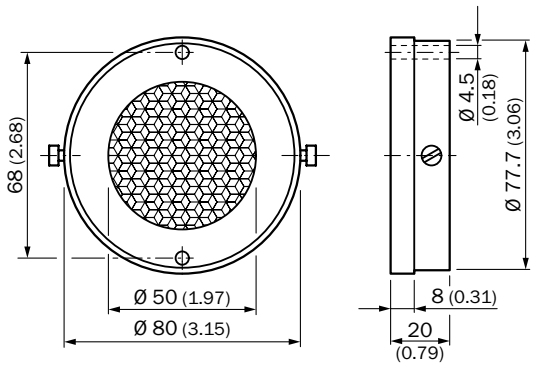

L

Connection systems

Modules/gateways

Connection modules

Figure	Description	Model name	Part no.
	I/O box extension with 2 ethernet ports enabling switch functionality, number of logical input: 4, output: 8	I/O box extension, 4 in/8 out	6037654
	I/O module to add logical output to the I/O extension box, number of logical output = 8, only usage with accessory 6037654	I/O extension module, 8 out	6037750
	I/O extension module to extend the number of digital inputs in combination with I/O box extension. Number of digital inputs: 2, only usage with accessory 6037654	I/O module, 2 extra digital inputs	6039038

Connecting cable (female connector-open) M8, 3-pin, PP, hygienic systems

- **Cable material:** PP
- **Connector material:** PP
- **Enclosure rating:** IP 67, IP 69K

Figure	Connection type head A	Connection type head B	Connecting cable	Model name	Part no.
	Female connector, M8, 3-pin, straight	Cable, open conductor heads	2 m, 3-wire	DOL-0803-G02MN	6033664
			5 m, 3-wire	DOL-0803-G05MN	6033665
			10 m, 3-wire	DOL-0803-G10MN	6033666
			25 m, 3-wire	DOL-0803-G25MN	6044452
	Female connector, M8, 3-pin, angled	Cable, open conductor heads	2 m, 3-wire	DOL-0803-W02MN	6033667
			5 m, 3-wire	DOL-0803-W05MN	6033668
			10 m, 3-wire	DOL-0803-W10MN	6033669

Connecting cable (female connector-open) M8, 3-pin, PUR, halogen-free

- **Cable material:** PUR, halogen-free
- **Connector material:** TPU
- **Enclosure rating:** IP 65, IP 68, IP 69K

Figure	Connection type head A	Connection type head B	Connecting cable	Model name	Part no.
	Female connector, M8, 3-pin, straight	Cable, open conductor heads	1 m, 3-wire	DOL-0803-G01MC	6036455
			2 m, 3-wire	DOL-0803-G02MC	6025888
			5 m, 3-wire	DOL-0803-G05MC	6025889
			10 m, 3-wire	DOL-0803-G10MC	6025890
			20 m, 3-wire	DOL-0803-G20MC	6036456
	Female connector, M8, 3-pin, angled	Cable, open conductor heads	2 m, 3-wire	DOL-0803-W02MC	6025891
			3 m, 3-wire	DOL-0803-W03MC	6038991
			5 m, 3-wire	DOL-0803-W05MC	6025892
			10 m, 3-wire	DOL-0803-W10MC	6025893

L

Connecting cable (female connector-open) M8, 3-pin, PVC

- **Cable material:** PVC
- **Connector material:** TPU
- **Enclosure rating:** IP 67, IP 69K

Figure	Connection type head A	Connection type head B	Connecting cable	Model name	Part no.
	Female connector, M8, 3-pin, straight	Cable, open conductor heads	2 m, 3-wire	DOL-0803-G02M	6010785
			5 m, 3-wire	DOL-0803-G05M	6022009
			10 m, 3-wire	DOL-0803-G10M	6022011
			15 m, 3-wire	DOL-0803-G15M	6036472
	Female connector, M8, 3-pin, angled	Cable, open conductor heads	2 m, 3-wire	DOL-0803-W02M	6008489
			5 m, 3-wire	DOL-0803-W05M	6022010
			10 m, 3-wire	DOL-0803-W10M	6022012
			15 m, 3-wire	DOL-0803-W15M	6036473

Connecting cable (female connector-open) M8, 4-pin, PP, hygienic systems

- **Cable material:** PP
- **Connector material:** PP
- **Enclosure rating:** IP 67, IP 69K

Figure	Connection type head A	Connection type head B	Connecting cable	Model name	Part no.
	Female connector, M8, 4-pin, straight	Cable, open conductor heads	2 m, 4-wire	DOL-0804-G02MN	6033670
			5 m, 4-wire	DOL-0804-G05MN	6033671
			10 m, 4-wire	DOL-0804-G10MN	6033672
	Female connector, M8, 4-pin, angled	Cable, open conductor heads	2 m, 4-wire	DOL-0804-W02MN	6033673
			5 m, 4-wire	DOL-0804-W05MN	6033674
			10 m, 4-wire	DOL-0804-W10MN	6033675

Connecting cable (female connector-open) M8, 4-pin, PUR, halogen-free

- **Cable material:** PUR, halogen-free
- **Connector material:** TPU
- **Enclosure rating:** IP 65, IP 68, IP 69K

Figure	Connection type head A	Connection type head B	Shielding	Connecting cable	Model name	Part no.
	Female connector, M8, 4-pin, straight	Cable, open conductor heads	Unshielded	2 m, 4-wire	DOL-0804-G02MC	6025894
				5 m, 4-wire	DOL-0804-G05MC	6025895
				10 m, 4-wire	DOL-0804-G10MC	6025896
				15 m, 4-wire	DOL-0804-G15MC	6038622
				20 m, 4-wire	DOL-0804-G20MC	6051148
			Shielded	5 m, 4-wire	DOL-0804-G05MAC	6050809
				10 m, 4-wire	DOL-0804-G10MAC	6050808
	Female connector, M8, 4-pin, angled	Cable, open conductor heads	Unshielded	2 m, 4-wire	DOL-0804-W02MC	6025897
				5 m, 4-wire	DOL-0804-W05MC	6025898
				10 m, 4-wire	DOL-0804-W10MC	6025899

L

Connecting cable (female connector-open) M8, 4-pin, PVC

- **Cable material:** PVC
- **Connector material:** PVC
- **Enclosure rating:** IP 67, IP 69K

Figure	Connection type head A	Connection type head B	Connecting cable	Model name	Part no.
	Female connector, M8, 4-pin, straight	Cable, open conductor heads	2 m, 4-wire	DOL-0804-G02M	6009870
			5 m, 4-wire	DOL-0804-G05M	6009872
			10 m, 4-wire	DOL-0804-G10M	6010754
			15 m, 4-wire	DOL-0804-G15M	6035232
			20 m, 4-wire	DOL-0804-G20M	6029109
			30 m, 4-wire	DOL-0804-G30M	6029110
			50 m, 4-wire	DOL-0804-G50M	6029111
	Female connector, M8, 4-pin, angled	Cable, open conductor heads	2 m, 4-wire	DOL-0804-W02M	6009871
			5 m, 4-wire	DOL-0804-W05M	6009873
			10 m, 4-wire	DOL-0804-W10M	6010755

Connecting cable (female connector-open) M12, 3-pin, PUR, halogen-free

- **Cable material:** PUR, halogen-free
- **Connector material:** TPU
- **Enclosure rating:** IP 65, IP 68, IP 69K

Figure	Connection type head A	Connection type head B	Connecting cable	Model name	Part no.
	Female connector, M12, 3-pin, straight	Cable, open conductor heads	2 m, 3-wire	DOL-1203-G02MC	6039075
			5 m, 3-wire	DOL-1203-G05MC	6039076
			10 m, 3-wire	DOL-1203-G10MC	6039077
	Female connector, M12, 3-pin, angled	Cable, open conductor heads	2 m, 3-wire	DOL-1203-W02MC	6039078
			5 m, 3-wire	DOL-1203-W05MC	6039079
			10 m, 3-wire	DOL-1203-W10MC	6036752
			15 m, 3-wire	DOL-1203-W15MC	6036753
			20 m, 3-wire	DOL-1203-W20MC	6036754

Connecting cable (female connector-open) M12, 4-pin, PUR, halogen-free

- **Cable material:** PUR, halogen-free
- **Connector material:** TPU

Figure	Connection type head A	Connection type head B	Shielding	Enclosure rating	Connecting cable	Model name	Part no.
	Female connector, M12, 4-pin, straight	Cable, open conductor heads	Unshielded	IP 65, IP 68, IP 69K	2 m, 4-wire	DOL-1204-G02MC	6025900
					5 m, 4-wire	DOL-1204-G05MC	6025901
					10 m, 4-wire	DOL-1204-G10MC	6025902
					15 m, 4-wire	DOL-1204-G15MC	6034749
					20 m, 4-wire	DOL-1204-G20MC	6034750
					25 m, 4-wire	DOL-1204-G25MC	6034751
			Shielded	IP 67	5 m, 4-wire	DOL-1204-G05MAC	6038621

L

Figure	Connection type head A	Connection type head B	Shielding	Enclosure rating	Connecting cable	Model name	Part no.
	Female connector, M12, 4-pin, angled, with 3 LEDs	Cable, open conductor heads	Unshielded	IP 65, IP 68, IP 69K	5 m, 4-wire	DOL-1204-L05MC	6020398
	Female connector, M12, 4-pin, angled	Cable, open conductor heads	Unshielded	IP 65, IP 68, IP 69K	2 m, 4-wire	DOL-1204-W02MC	6025903
					5 m, 4-wire	DOL-1204-W05MC	6025904
					10 m, 4-wire	DOL-1204-W10MC	6025905
					15 m, 4-wire	DOL-1204-W15MC	6034752
					20 m, 4-wire	DOL-1204-W20MC	6034753
					25 m, 4-wire	DOL-1204-W25MC	6034754

Connecting cable (female connector-open) M12, 4-pin, PVC

- **Cable material:** PVC
- **Connector material:** TPU
- **Enclosure rating:** IP 67

Figure	Connection type head A	Connection type head B	Connecting cable	Model name	Part no.
	Female connector, M12, 4-pin, straight	Cable, open conductor heads	2 m, 4-wire	DOL-1204-G02M	6009382
			5 m, 4-wire	DOL-1204-G05M	6009866
			10 m, 4-wire	DOL-1204-G10M	6010543
			15 m, 4-wire	DOL-1204-G15M	6010753
			20 m, 4-wire	DOL-1204-G20M	6034401
	Female connector, M12, 4-pin, angled, with 3 LEDs	Cable, open conductor heads	2 m, 4-wire	DOL-1204-L02M	6027945
			5 m, 4-wire	DOL-1204-L05M	6027944
			10 m, 4-wire	DOL-1204-L10M	6027946
	Female connector, M12, 4-pin, angled	Cable, open conductor heads	2 m, 4-wire	DOL-1204-W02M	6009383
			5 m, 4-wire	DOL-1204-W05M	6009867
			10 m, 4-wire	DOL-1204-W10M	6010541
			15 m, 4-wire	DOL-1204-W15M	6036474
			20 m, 4-wire	DOL-1204-W20M	6033559

Connecting cable (female connector-open) M12, 4-pin, PVC, hygienic systems

- **Cable material:** PVC
- **Connector material:** PVC
- **Enclosure rating:** IP 67, IP 69K

Figure	Connection type head A	Connection type head B	Connecting cable	Model name	Part no.
	Female connector, M12, 4-pin, straight	Cable, open conductor heads	2 m, 4-wire	DOL-1204-G02MN	6028128
			5 m, 4-wire	DOL-1204-G05MN	6028130
			10 m, 4-wire	DOL-1204-G10MN	6028132
			25 m, 4-wire	DOL-1204-G25MN	6028134
	Female connector, M12, 4-pin, angled, with 3 LEDs	Cable, open conductor heads	2 m, 4-wire	DOL-1204-L02MN	6028136
			5 m, 4-wire	DOL-1204-L05MN	6028137
			10 m, 4-wire	DOL-1204-L10MN	6028138
			25 m, 4-wire	DOL-1204-L25MN	6028139
	Female connector, M12, 4-pin, angled	Cable, open conductor heads	2 m, 4-wire	DOL-1204-W02MN	6028129
			5 m, 4-wire	DOL-1204-W05MN	6028131
			10 m, 4-wire	DOL-1204-W10MN	6028133
			25 m, 4-wire	DOL-1204-W25MN	6028135

Connecting cable (female connector-open) M12, 5-pin, PUR, halogen-free

- **Cable material:** PUR, halogen-free
- **Connector material:** TPU
- **Enclosure rating:** IP 65, IP 68, IP 69K

Figure	Connection type head A	Connection type head B	Shielding	Connecting cable	Model name	Part no.
	Female connector, M12, 5-pin, straight	Cable, open conductor heads	Unshielded	2 m, 5-wire	DOL-1205-G02MC	6025906
				5 m, 5-wire	DOL-1205-G05MC	6025907
				10 m, 5-wire	DOL-1205-G10MC	6025908
			Shielded	5 m, 5-wire	DOL-1205-G05MAC	6036384
				10 m, 5-wire	DOL-1205-G10MAC	6036385
				20 m, 5-wire	DOL-1205-G20MAC	6036386
	Female connector, M12, 5-pin, angled	Cable, open conductor heads	Unshielded	2 m, 5-wire	DOL-1205-W02MC	6025909
				5 m, 5-wire	DOL-1205-W05MC	6025910
				10 m, 5-wire	DOL-1205-W10MC	6025911

Connecting cable (female connector-open) M12, 5-pin, PVC

- **Cable material:** PVC
- **Connector material:** TPU
- **Enclosure rating:** IP 67

Figure	Connection type head A	Connection type head B	Connecting cable	Model name	Part no.
	Female connector, M12, 5-pin, straight	Cable, open conductor heads	2 m, 5-wire	DOL-1205-G02M	6008899
			5 m, 5-wire	DOL-1205-G05M	6009868
			10 m, 5-wire	DOL-1205-G10M	6010544
			15 m, 5-wire	DOL-1205-G15M	6029215
	Female connector, M12, 5-pin, angled	Cable, open conductor heads	2 m, 5-wire	DOL-1205-W02M	6008900
			5 m, 5-wire	DOL-1205-W05M	6009869
			10 m, 5-wire	DOL-1205-W10M	6010542

Connecting cable (female connector-open) M12, 5-pin, PVC, hygienic systems

- **Cable material:** PVC
- **Connector material:** PVC
- **Enclosure rating:** IP 67, IP 69K

Figure	Connection type head A	Connection type head B	Connecting cable	Model name	Part no.
	Female connector, M12, 5-pin, straight	Cable, open conductor heads	2 m, 5-wire	DOL-1205-G02MN	6028140
			5 m, 5-wire	DOL-1205-G05MN	6028141
			10 m, 5-wire	DOL-1205-G10MN	6028142
			25 m, 5-wire	DOL-1205-G25MN	6028143

L

Connecting cable (male connector-open) M12, 4-pin, PUR, halogen-free

- **Cable material:** PUR, halogen-free
- **Connector material:** TPU
- **Enclosure rating:** IP 65, IP 68, IP 69K

Figure	Connection type head A	Connection type head B	Connecting cable	Model name	Part no.
	Male connector, M12, 4-pin, straight	Cable, open conductor heads	0.29 m, 4-wire	STL-1204-G0M3C	6011311
			2 m, 4-wire	STL-1204-G02MC	6028077
			5 m, 4-wire	STL-1204-G05MC	6048170
			10 m, 4-wire	STL-1204-G10MC	6041750
			15 m, 4-wire	STL-1204-G15MC	6048171
	Male connector, M12, 4-pin, angled	Cable, open conductor heads	5 m, 4-wire	STL-1204-W05MC	6037472
			15 m, 4-wire	STL-1204-W15MC	6037473

Connecting cable (male connector-open) M12, 5-pin

- **Cable material:** PUR, halogen-free
- **Connector material:** TPU
- **Enclosure rating:** IP 65, IP 68, IP 69K

Figure	Connection type head A	Connection type head B	Connecting cable	Model name	Part no.
 Illustration may differ	Male connector, M12, 5-pin, straight	Cable, open conductor heads	1 m, 5-wire	STL-1205-G01MC	6037741
			2 m, 5-wire	STL-1205-G02MC	6051951
			5 m, 5-wire	STL-1205-G05MC	6051952
			10 m, 5-wire	STL-1205-G10MC	6051953

Female connector (ready to assemble) M8, 3-pin

- **Connector material:** PBT
- **Enclosure rating:** IP 67

Figure	Connection type head A	Connection type head B	Model name	Part no.
	Female connector, M8, 3-pin, straight	Screw-type terminals	DOS-0803-G	7902077
	Female connector, M8, 3-pin, angled	Pin penetration	DOS-0803-W	7902078

Female connector (ready to assemble) M8, 4-pin

- **Connector material:** PBT
- **Enclosure rating:** IP 67

Figure	Connection type head A	Connection type head B	Model name	Part no.
	Female connector, M8, 4-pin, straight	Screw-type terminals	DOS-0804-G	6009974
	Female connector, M8, 4-pin, angled	Pin penetration	DOS-0804-W	6009975

L

Female connector (ready to assemble) M12, 4-pin

- **Connector material:** PBT
- **Enclosure rating:** IP 67

Figure	Connection type head A	Connection type head B	Locking nut material	Model name	Part no.
	Female connector, M12, 4-pin, straight	Screw-type terminals	CuZn	DOS-1204-G	6007302
			Stainless steel	DOS-1204-GN	6028357
	Female connector, M12, 4-pin, angled	Screw-type terminals	CuZn	DOS-1204-W	6007303
			Stainless steel	DOS1204-WN	6028358

Female connector (ready to assemble) M12, 5-pin

- **Connector material:** PBT
- **Enclosure rating:** IP 67

Figure	Connection type head A	Connection type head B	Model name	Part no.
	Female connector, M12, 5-pin, straight	Screw-type terminals	DOS-1205-G	6009719
	Female connector, M12, 5-pin, angled	Screw-type terminals	DOS-1205-W	6009720

Male connector (ready to assemble) M8, 3-pin

Figure	Connection type head A	Connection type head B	Connector material	Enclosure rating	Model name	Part no.
	Male connector, M8, 3-pin, straight	Screw-type terminals	PBT	IP 67	STE-0803-G	6037322

L

Male connector (ready to assemble) M8, 4-pin

Figure	Connection type head A	Connection type head B	Connector material	Enclosure rating	Model name	Part no.
	Male connector, M8, 4-pin, straight	Screw-type terminals	PBT	IP 67	STE-0804-G	6037323

Male connector (ready to assemble) M12, 4-pin

- **Connector material:** PBT
- **Enclosure rating:** IP 67

Figure	Connection type head A	Connection type head B	Locking nut material	Model name	Part no.
	Male connector, M12, 4-pin, straight	Screw-type terminals	CuZn	STE-1204-G	6009932
			Stainless steel	STE-1204-GN	6028359
	Male connector, M12, 4-pin, angled	Screw-type terminals	CuZn	STE-1204-W	6022084

Male connector (ready to assemble) M12, 5-pin

- **Connector material:** PBT
- **Enclosure rating:** IP 67

Figure	Connection type head A	Connection type head B	Model name	Part no.
	Male connector, M12, 5-pin, straight	Screw-type terminals	STE-1205-G	6022083
	Male connector, M12, 5-pin, angled	Screw-type terminals	STE-1205-W	6022082

Connection cable (male connector-female connector) M8, 3-pin, PUR, halogen-free

- **Cable material:** PUR, halogen-free
- **Connector material:** TPU
- **Enclosure rating:** IP 65, IP 68, IP 69K

Figure	Connection type head A	Connection type head B	Connecting cable	Model name	Part no.
	Female connector, M8, 3-pin, angled	Male connector, M12, 3-pin, straight	0.6 m, 3-wire	DSL-8203-B0M6C	6025916
			2 m, 3-wire	DSL-8203-B02MC	6025917
			5 m, 3-wire	DSL-8203-B05MC	6039185
	Female connector, M8, 3-pin, straight	Male connector, M12, 3-pin, straight	0.6 m, 3-wire	DSL-8203-G0M6C	6025914
			2 m, 3-wire	DSL-8203-G02MC	6025915
			5 m, 3-wire	DSL-8203-G05MC	6030608

L

Connection cable (male connector-female connector) M8, 3-pin, PVC

- **Cable material:** PVC
- **Enclosure rating:** IP 67

Figure	Connection type head A	Connection type head B	Connecting cable	Model name	Part no.
 Illustration may differ	Female connector, M8, 3-pin, straight	Male connector, M12, 3-pin, straight	0.6 m	DSL-8203-G0M6	6022570
			2 m	DSL-8203-G02M	6022572

Connection cable (male connector-female connector) M8, 4-pin, PUR, halogen-free

- **Cable material:** PUR, halogen-free
- **Connector material:** TPU
- **Enclosure rating:** IP 65, IP 68, IP 69K

Figure	Connection type head A	Connection type head B	Connecting cable	Model name	Part no.
	Female connector, M8, 4-pin, straight	Male connector, M8, 4-pin, straight	0.6 m, 4-wire	DSL-0804-G0M6C	6039089
			2 m, 4-wire	DSL-0804-G02MC	6036335
			5 m, 4-wire	DSL-0804-G05MC	6039090
 Illustration may differ		Male connector, M12, 4-pin, straight	0.6 m, 4-wire	DSL-8204-G0M6C	6025918
			2 m, 4-wire	DSL-8204-G02MC	6025919
			5 m, 4-wire	DSL-8204-G05MC	6039181
	Female connector, M8, 4-pin, angled	Male connector, M12, 4-pin, straight	0.6 m, 4-wire	DSL-8204-B0M6C	6025920
			2 m, 4-wire	DSL-8204-B02MC	6025921
			5 m, 4-wire	DSL-8204-B05MC	6039182

Connection cable (male connector-female connector) M8, 4-pin, PVC

- **Cable material:** PVC
- **Enclosure rating:** IP 67

Figure	Connection type head A	Connection type head B	Connecting cable	Model name	Part no.
 Illustration may differ	Female connector, M8, 4-pin, straight	Male connector, M8, 4-pin, straight	0.6 m, 4-wire	DSL-0804-G0M6	6034664
			1.5 m, 4-wire	DSL-0804-G1M5	6042050
			2.5 m, 4-wire	DSL-0804-G2M5	6051282
			3 m, 4-wire	DSL-0804-G03M	6051283
	Male connector, M8, 4-pin, straight	Male connector, M12, 4-pin, straight	0.6 m, 4-wire	DSL-8204-G0M6	6022571
			2 m, 4-wire	DSL-8204-G02M	6022573
			5 m, 4-wire	DSL-8204-G05M	6034403
			10 m, 4-wire	DSL-8204-G10M	6034404
			20 m, 4-wire	DSL-8204-G20M	6034405

Connection cable (male connector-female connector), M12, 3-pin, PUR, halogen-free

- **Cable material:** PUR, halogen-free
- **Enclosure rating:** IP 67

Figure	Connection type head A	Connection type head B	Connecting cable	Model name	Part no.
 Illustration may differ	Female connector, M12, 3-pin, straight	Male connector, M8, 3-pin, straight	0.6 m	DSL-2803-G0M6C	6039183
			2 m	DSL-2803-G02MC	6039184
			5 m	DSL-2803-G05MC	6028664

L

Connection cable (male connector-female connector) M12, 4-pin, PUR, halogen-free

- **Cable material:** PUR, halogen-free
- **Connector material:** TPU
- **Enclosure rating:** IP 67, IP 68, IP 69K

Figure	Connection type head A	Connection type head B	Connecting cable	Model name	Part no.
 Illustration may differ	Female connector, M12, 4-pin, angled	Male connector, M12, 3-pin, straight	0.6 m, 4-wire	DSL-1203-B0M6C	6025924
			2 m, 4-wire	DSL-1203-B02MC	6025925
	Female connector, M12, 4-pin, straight	Male connector, M8, 3-pin, straight	0.6 m, 4-wire	DSL-2804-G0M6C	6037595
			2 m, 4-wire	DSL-2804-G02MC	6039180
			5 m, 4-wire	DSL-2804-G05MC	6039091
		Male connector, M12, 3-pin, straight	0.6 m, 4-wire	DSL-1203-G0M6C	6025922
			2 m, 4-wire	DSL-1203-G02MC	6025923
		Male connector, M12, 4-pin, straight	0.6 m, 4-wire	DSL-1204-G0M6C	6025926
			1 m, 4-wire	DSL-1204-G01MC	6033244
			2 m, 4-wire	DSL-1204-G02MC	6025927
			5 m, 4-wire	DSL-1204-G05MC	6033245
			10 m, 4-wire	DSL-1204-G10MC	6033698

Connection cable (male connector-female connector) M12, 4-pin, PVC

- **Cable material:** PVC
- **Connector material:** TPU
- **Enclosure rating:** IP 67, IP 69K

Figure	Connection type head A	Connection type head B	Connecting cable	Model name	Part no.
	Female connector, M12, 4-pin, straight	Male connector, M12, 4-pin, straight	5 m, 4-wire	DSL-1204-G05M	6022569

Connection cable (male connector-female connector) M12, 4-pin, PVC, hygienic systems

- **Cable material:** PVC
- **Connector material:** PVC
- **Enclosure rating:** IP 67, IP 69K

Figure	Connection type head A	Connection type head B	Connecting cable	Model name	Part no.
	Female connector, M12, 4-pin, angled	Male connector, M12, 4-pin, straight	0.6 m, 4-wire	DSL-1204-B0M6N	6028197
			2 m, 4-wire	DSL-1204-B02MN	6028198
			5 m, 4-wire	DSL-1204-B05MN	6028199
	Female connector, M12, 4-pin, straight	Male connector, M12, 4-pin, straight	0.6 m, 4-wire	DSL-1204-G0M6N	6028194
			2 m, 4-wire	DSL-1204-G02MN	6028195
			5 m, 4-wire	DSL-1204-G05MN	6028196

L

Connection cable (male connector-female connector) M12, 5-pin, PUR, halogen-free

- **Cable material:** PUR, halogen-free
- **Connector material:** TPU
- **Enclosure rating:** IP 67, IP 68, IP 69K

Figure	Connection type head A	Connection type head B	Connecting cable	Model name	Part no.
 Illustration may differ	Male connector, M12, 5-pin, straight	Female connector, M12, 5-pin, angled	0.6 m, 5-wire	DSL-1205-B0M6C	6029283
			1 m, 5-wire	DSL-1205-B01MC	6029284
			1.5 m, 5-wire	DSL-1205-B1M5C	6029286
			2 m, 5-wire	DSL-1205-B02MC	6029287
			5 m, 5-wire	DSL-1205-B05MC	6029288
		Female connector, M12, 5-pin, straight	0.6 m, 5-wire	DSL-1205-G0M6C	6025930
			1 m, 5-wire	DSL-1205-G01MC	6029280
			2 m, 5-wire	DSL-1205-G02MC	6025931
			5 m, 5-wire	DSL-1205-G05MC	6029282
			10 m, 5-wire	DSL-1205-G10MC	6038954
			15 m, 5-wire	DSL-1205-G15MC	6038956
			20 m, 5-wire	DSL-1205-G20MC	6038957

Dimensional drawings Plug connectors and cables

DOL-0803-GxxMC

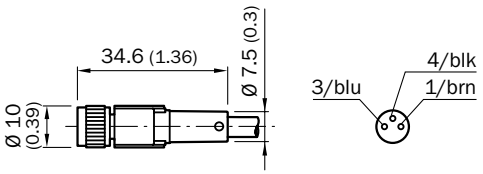

DOL-0803-GxxM

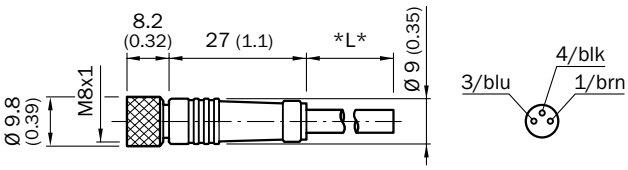

DOL-0803-GxxMN, DOL-0804-GxxMN

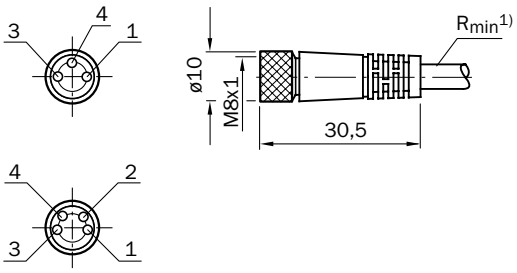

DOL-0803-WxxM

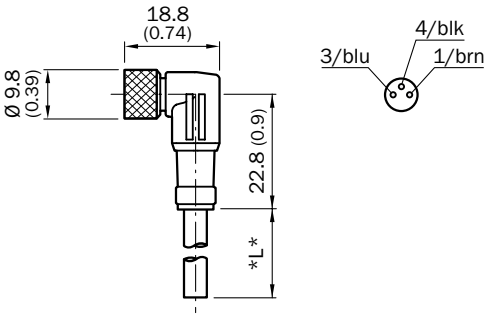

DOL-0803-WxxMCW10MC

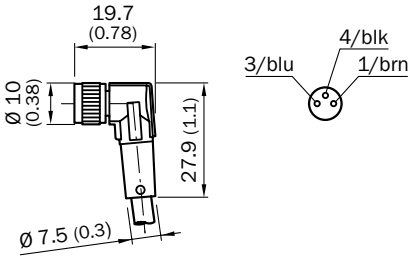

DOL-0803-WxxMN, DOL-0804-WxxMN

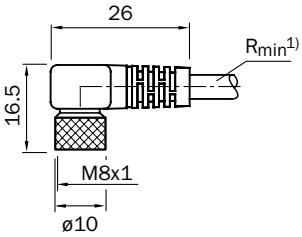

DOL-0804-GxxM

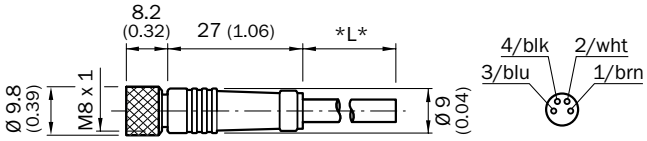

DOL-0804-GxxMC

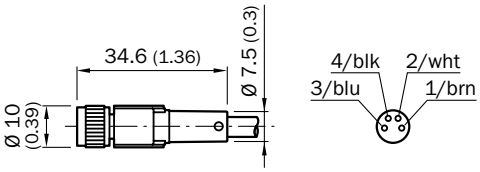

DOL-0804-WxxM

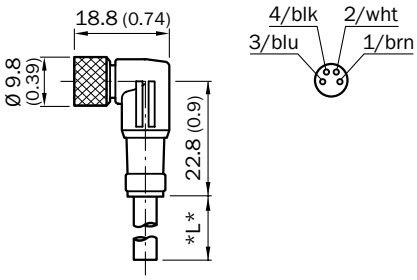

DOL-0804-WxxMC

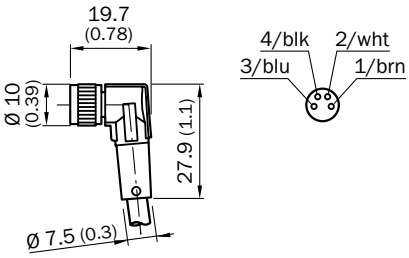

L

DOL-1203-GxxMC

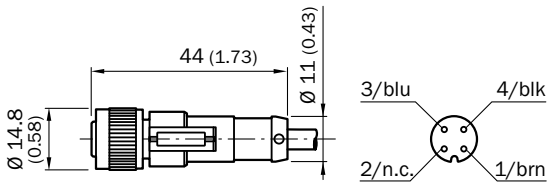

DOL-1203-WxxMC

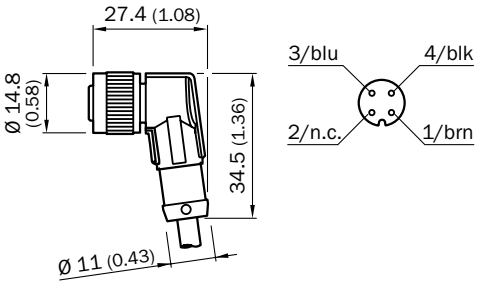

DOL-1204-GxxM, DOL-1204-GxxMC, DOL-1204-GxxMA, DOL-1204-GxxMN

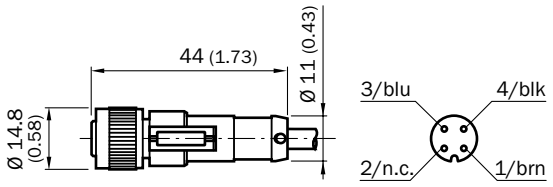

DOL-1204-L02M

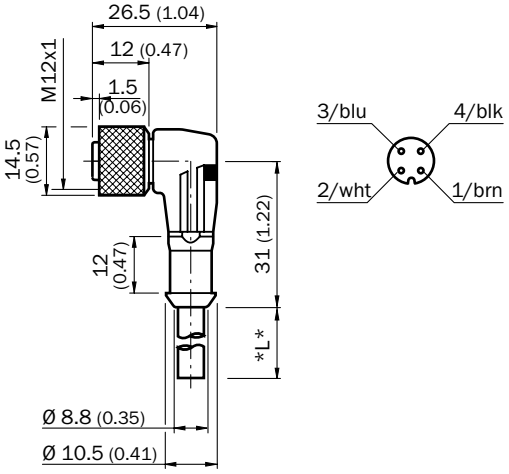

DOL-1204-L02MN

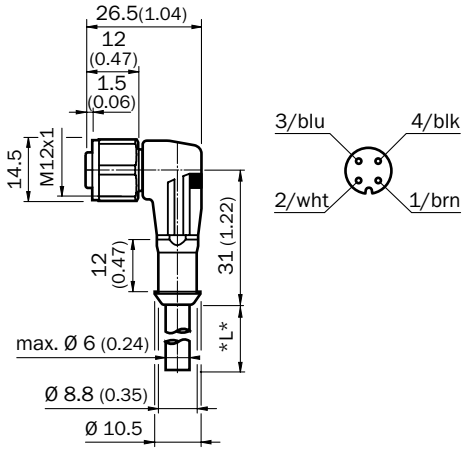

DOL-1204-L05MC

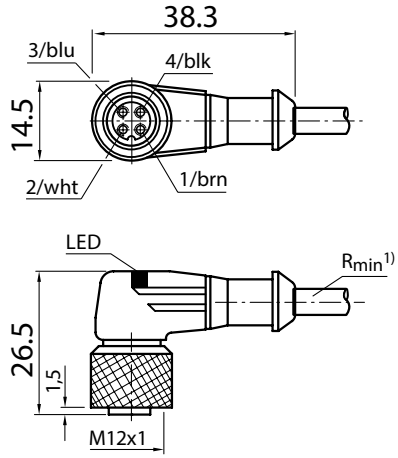

L

DOL-1204-WxxM

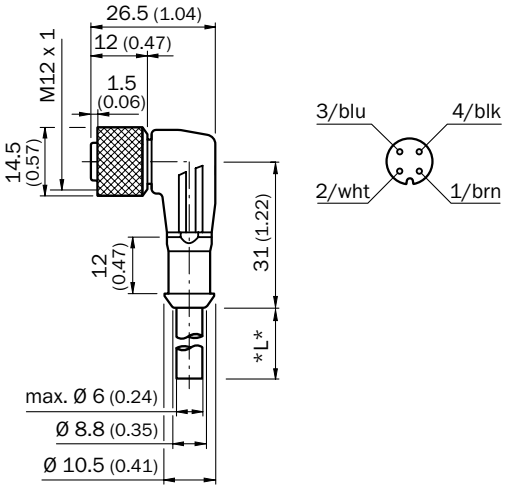

DOL-1204-WxxMC

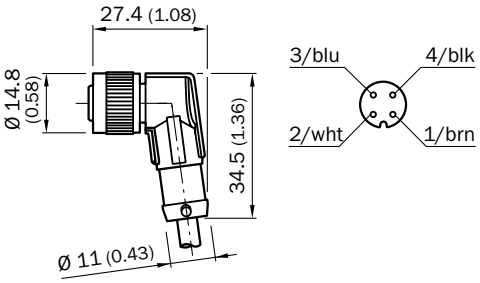

DOL-1204-WxxMN

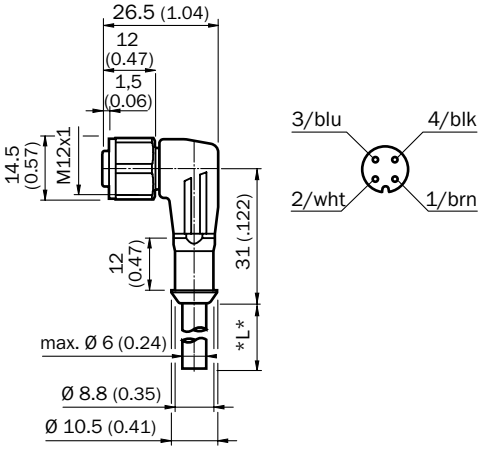

DOL-1204-W05MA

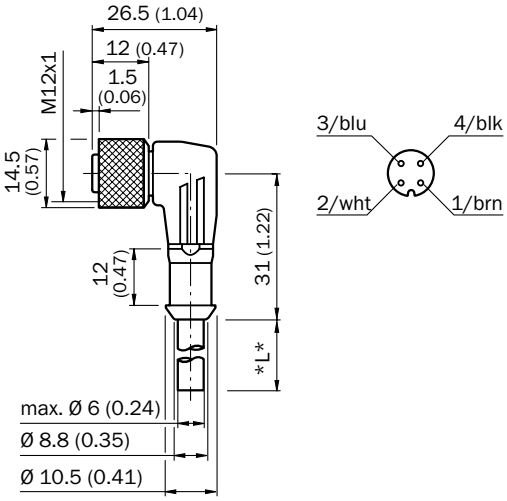

DOL-1205-GxxM

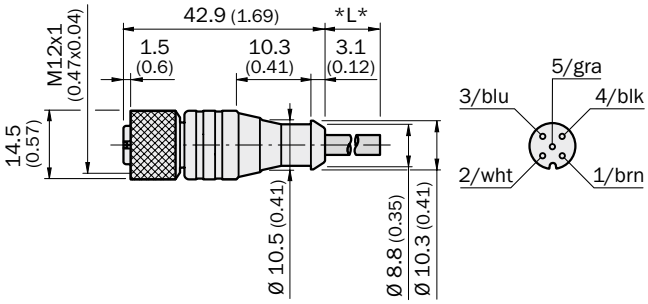

DOL-1205-GxxMC

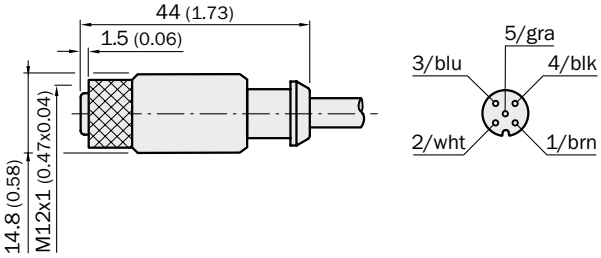

DOL-1205-GxxMN

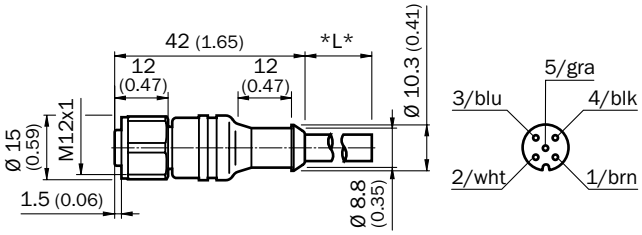

DOL-1205-GxxMAC

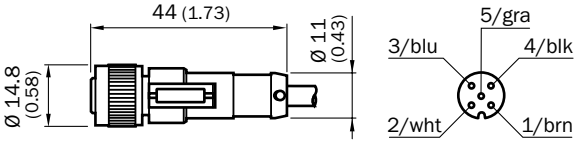

L

DOL-1205-WxxM

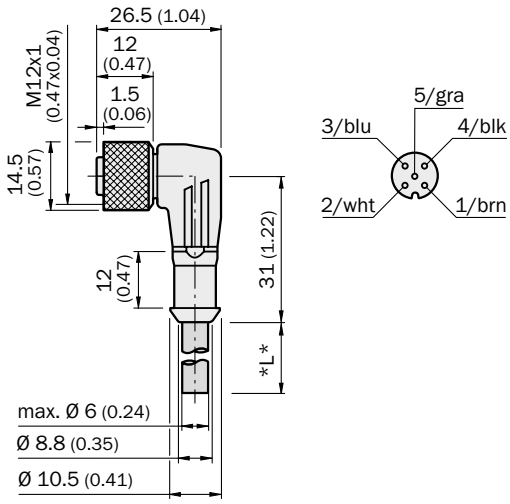

DOL-1205-WxxMC

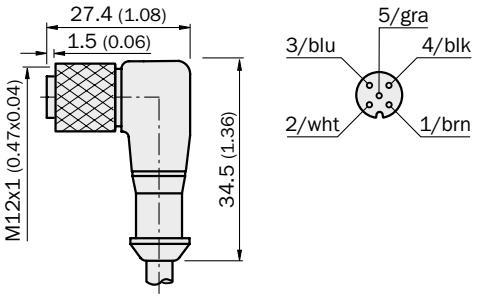

DOS-0803-G

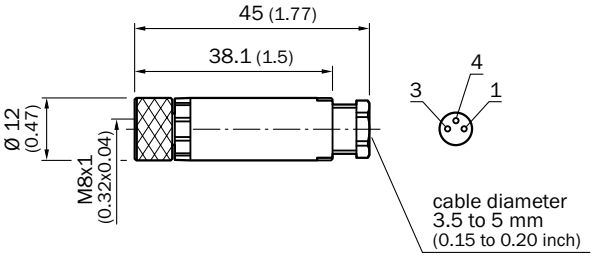

DOS-0803-W

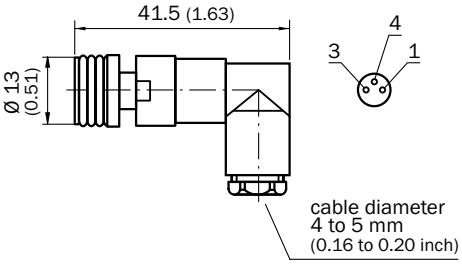

DOS-0804-G

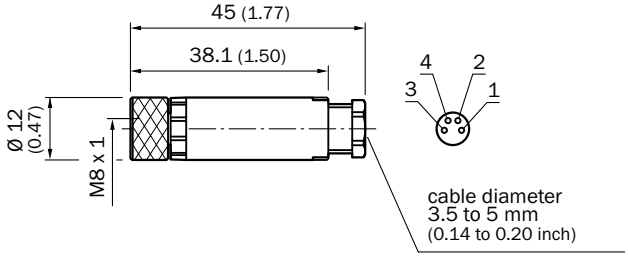

DOS-0804-W

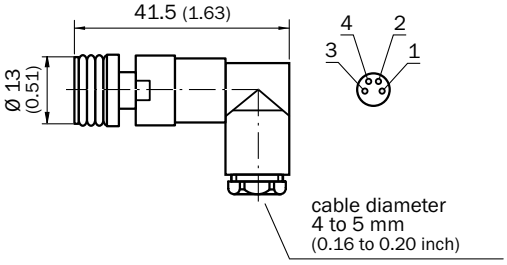

DOS-1204-G

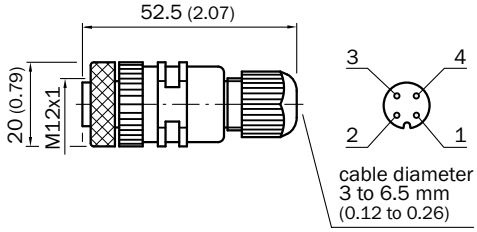

DOS-1204-W

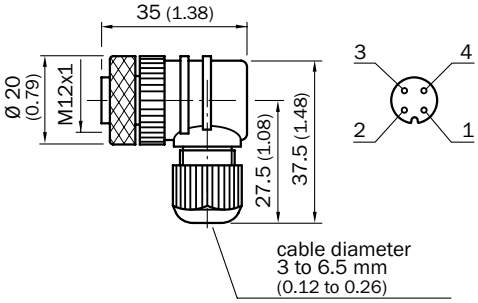

L

DOS-1205-G

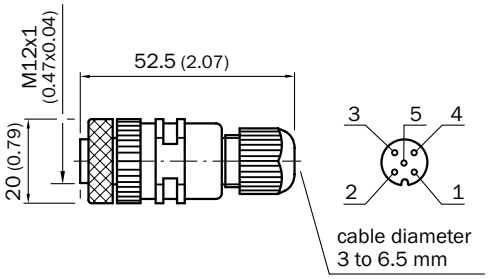

DOS-1205-W

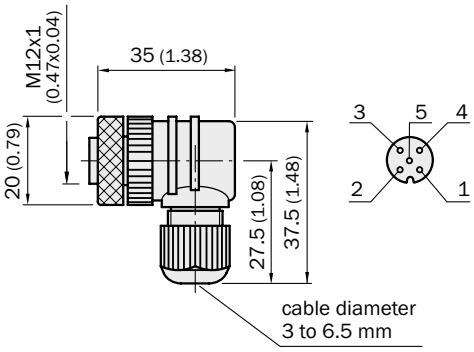

DSL-0804-G03M
DSL-0804-G0M6
DSL-0804-G2M5

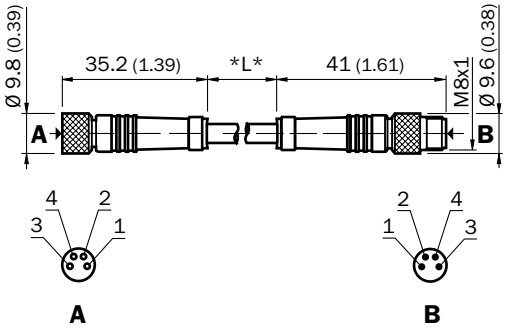

DSL-0804-G02MC
DSL-0804-G05MC
DSL-0804-G0M6C

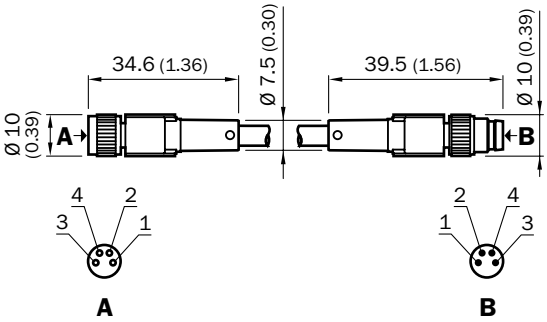

DSL-1204-B0M6N

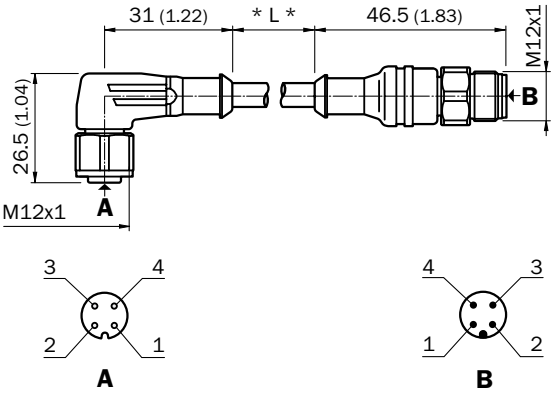

DSL-1204-GxxMC

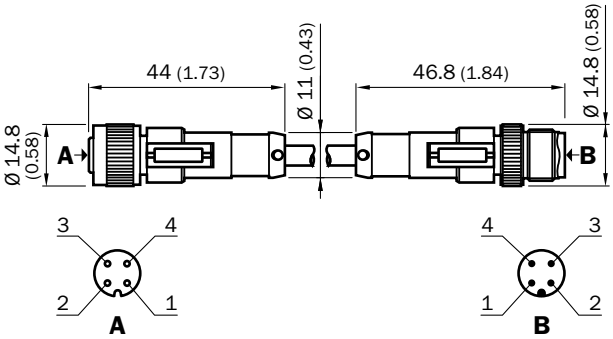

DSL-1204-GxxMN

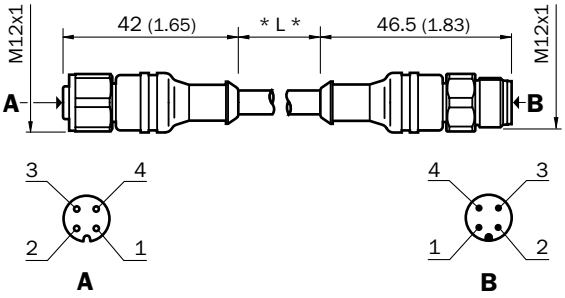

DSL-1204-GxxM

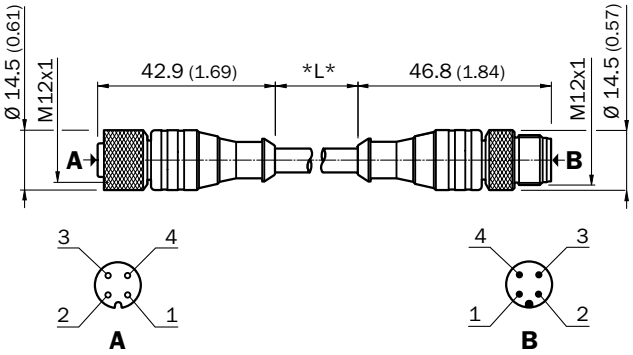

L

DSL-1205-GxxMC

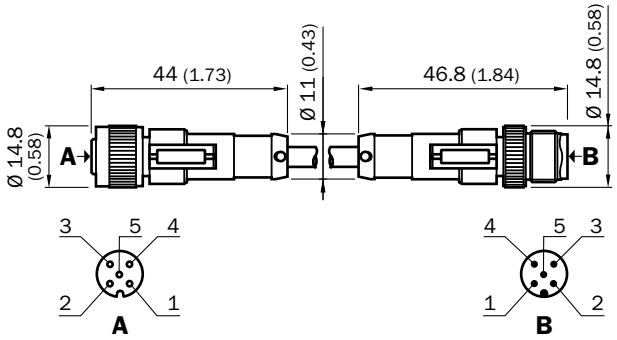

DSL-1208-G01MAC

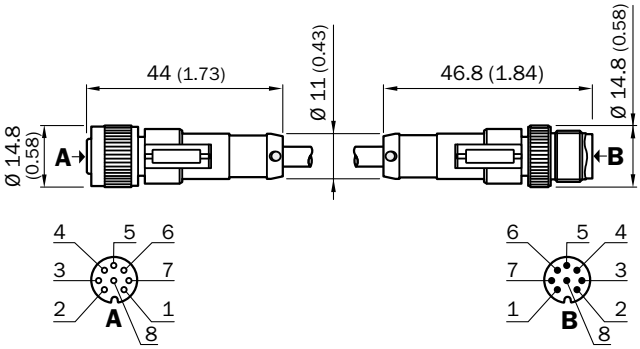

DSL-2803-GxxMC, DSL-2804-GxxMC

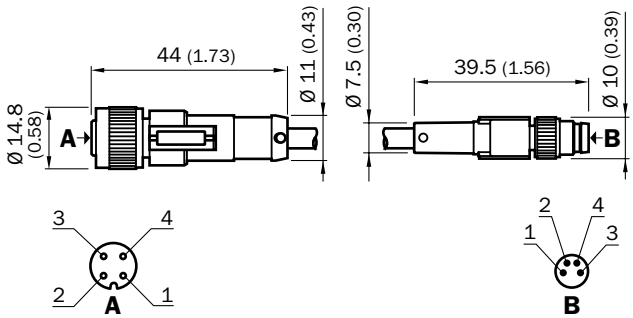

DSL-8203-BxxMC

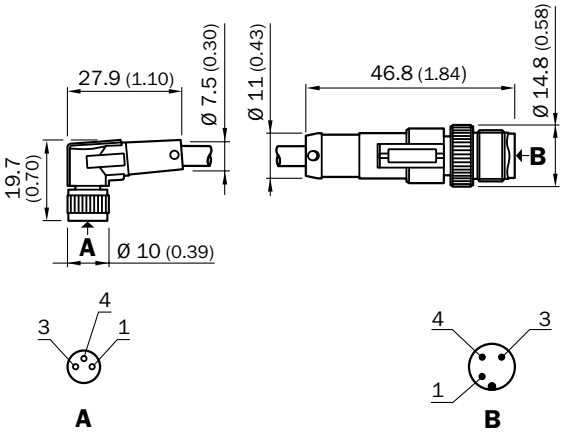

DSL-8203-GxxMC

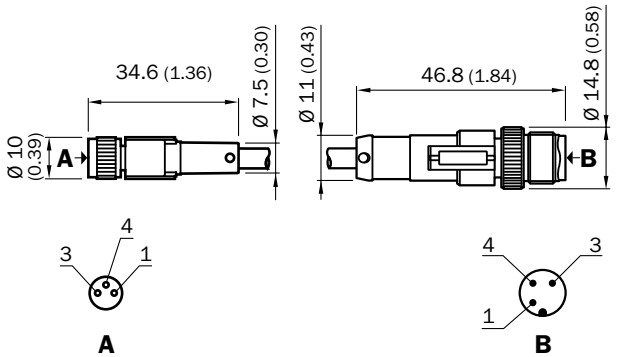

DSL-8203-GxxM

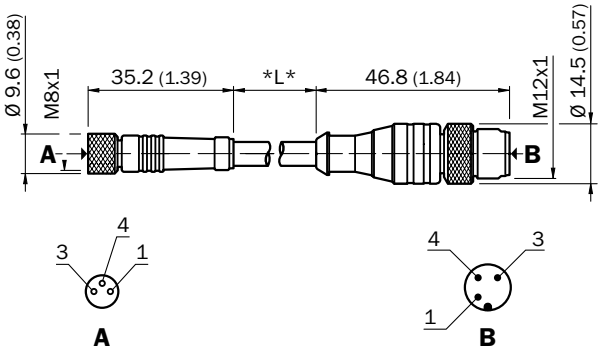

DSL-8204-BxxMC

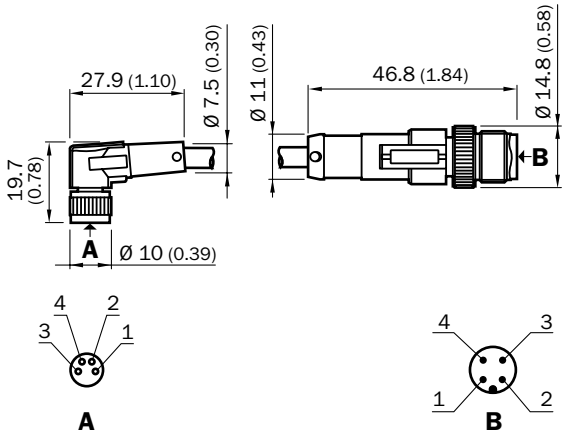

DSL-8204-GxxM

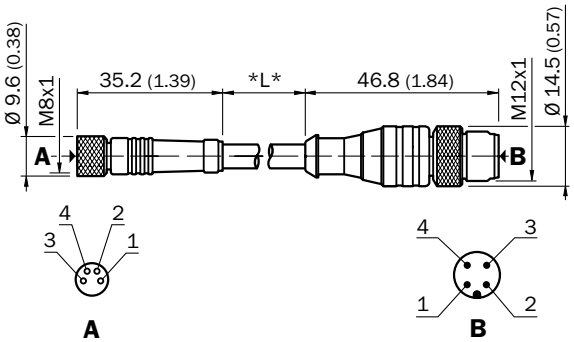

L

DSL-8204-GxxMC

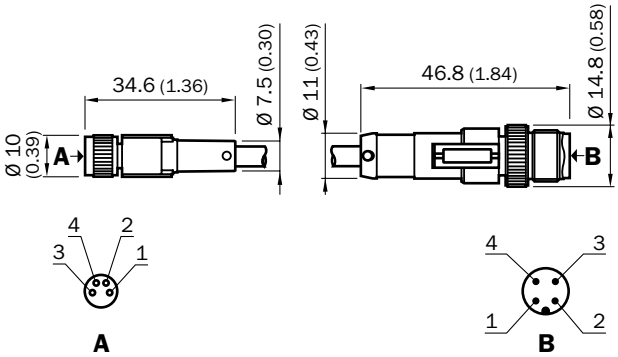

STE-0803-G

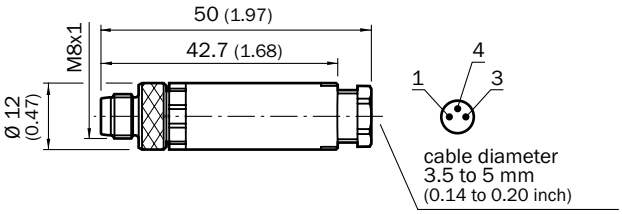

STE-0804-G

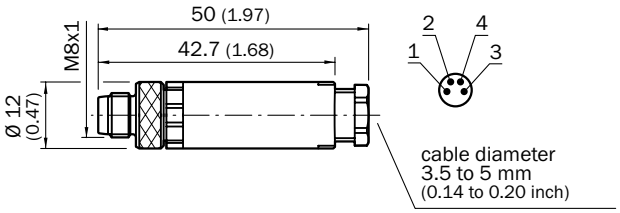

STE-1204-G

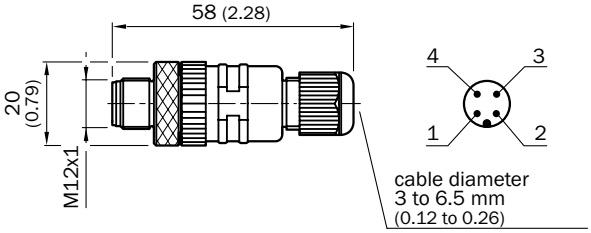

STE-1204-W

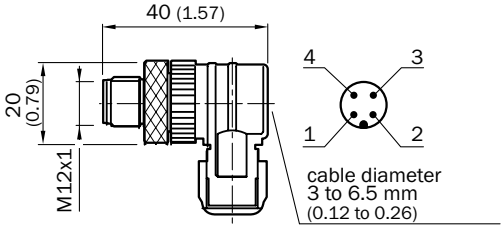

STE-1205-G

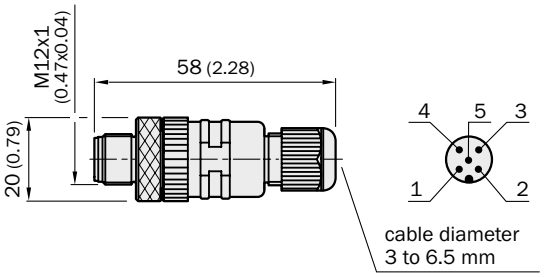

STE-1205-W

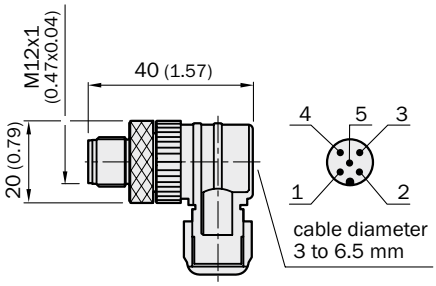

STL-1204-GxxMC

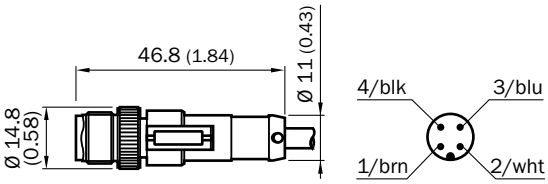

STL-1204-WxxMC

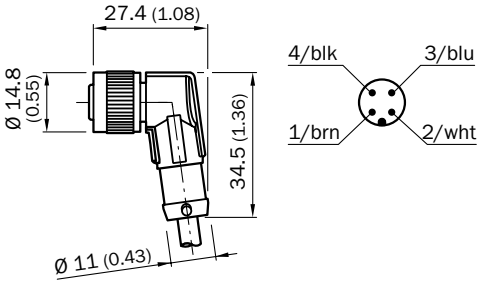

L

Other accessories

Power supplies

Figure	Output type	Description	Model name	Part no.
	NPN	Cable with receptacle, M12, 4-pin, 0.2 m, IP 65	ACIM1-N2221	1057381
		Cable with receptacle, M8, 4-pin, 0.2 m, IP 65	ACIM1-N3221	1057380
	PNP	Cable with receptacle, M12, 4-pin, 0.2 m, IP 65	ACIM1-P2221	1057184
		Cable with receptacle, M8, 4-pin, 0.2 m, IP 65	ACIM1-P3221	1057183

Switching amplifiers

Figure	Supply voltage	Output function	Approvals	Model name	Part no.
	AC/DC 24 V ... 230 V, 1.3 W	2 channels with invertible SPDT relay	II (1) G [Ex ia] IIC II (1) D [Ex iaD] II (3) G Ex nAC [ia] IIC T4 X	EN2-2EX-1	6041096
	DC 19.2 V ... 30 V, 1 W	2 channels with invertible NO relay	II (1) GD [Ex ia] IIC, IIB II (3) G Ex nAC II T4 X	EN2-2EX-3	6041095

IO-Link modules

Figure	Description	Model name	Part no.
	IO-Link V1.1 Class A Port, USB2.0 port, optional external power supply 24V / 1A	SiLink2 Master	1061790
	IO-Link master, IO-Link field module, DC 18 V ... 30 V, IP 65, IP 67	IOLSHPB-P3104	6032904

L

Dimensional drawings other accessories

Power supplies

ACIM1

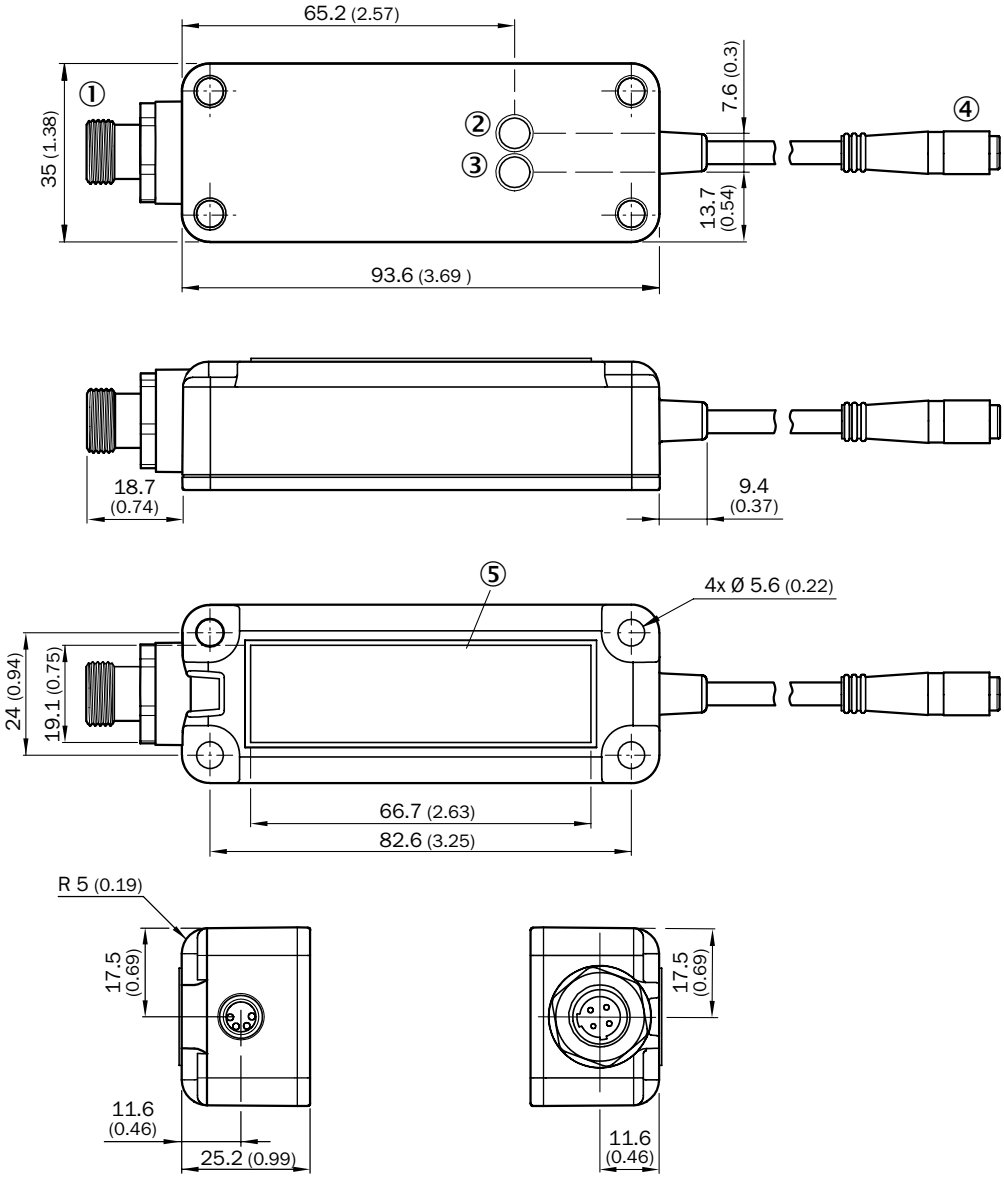

① AC input power, switch output
② Status indicator LED green: DC output power present
③ Orange LED indicator : DC switch input present
④ DC output power, switch input
⑤ Magnet

L

Switching amplifiers

EN2-2EX-1

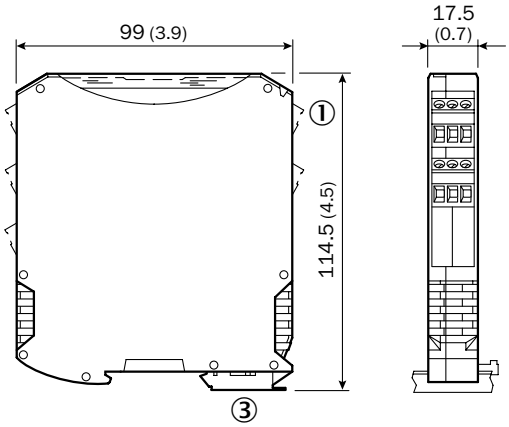

EN2-2EX-3

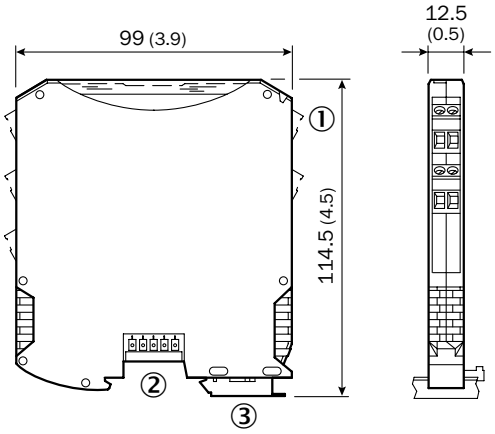

IO-Link modules

SiLink2 Master

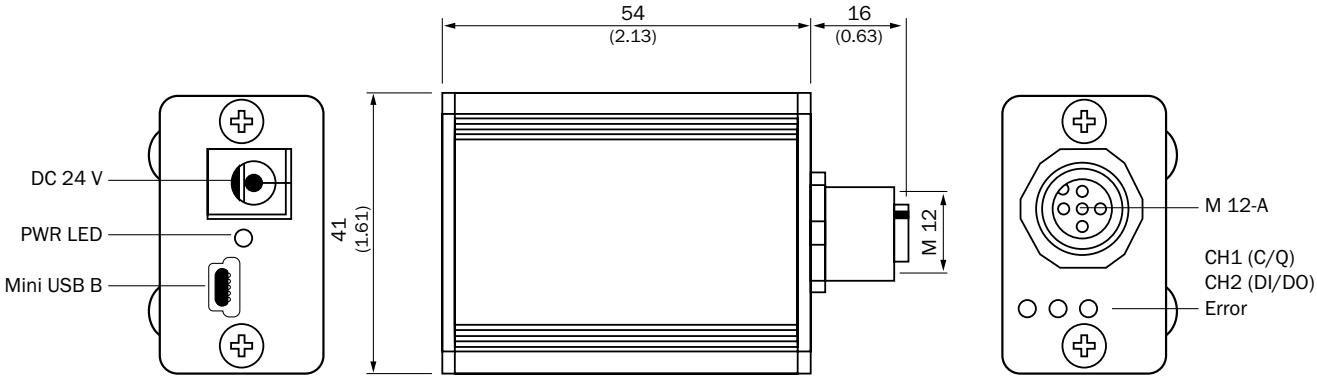

IOLSHPB-P3104

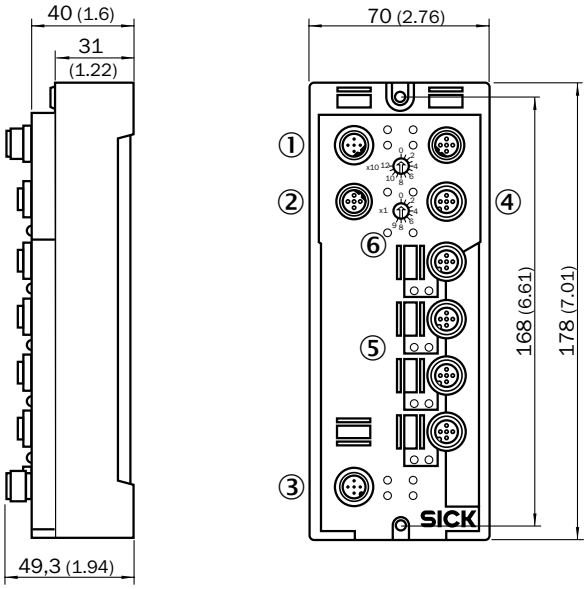

① Bus IN
② Bus OUT
③ Power supply IN
④ Power supply OUT
⑤ Port 1...4
⑥ Bus address rotary switch

L

Model name	Part no.	Page
LL3-DC03	5326020	J-811
LL3-DC04	5326018	J-811
LL3-DC05	5326016	J-816
LL3-DC06	5326017	J-810
LL3-DC07	5326019	J-811
LL3-DC08	5326029	J-810
LL3-DC09	5326028	J-810
LL3-DC38	5322472	J-816
LL3-DC39	5322513	J-816
LL3-DC47	5324268	J-810
LL3-DC57	5324269	J-810
LL3-DE01	5325285	J-810
LL3-DE02	5324497	J-810
LL3-DE03	5325986	J-811
LL3-DE04	5325987	J-811
LL3-DF02-S01	5321924	J-817
LL3-DF04	5326035	J-817
LL3-DF05	5326034	J-817
LL3-DF07	5326033	J-817
LL3-DH01	5308091	J-815
LL3-DH02	5308092	J-815
LL3-DH03	5324787	J-815
LL3-DH04	5326022	J-813
LL3-DH05	5326021	J-812
LL3-DH06	5326026	J-810
LL3-DH07	5326031	J-815
LL3-DH08	5326025	J-810
LL3-DH09	5326030	J-815
LL3-DH10	5326023	J-811
LL3-DH11	5326024	J-811
LL3-DJ01	5325989	J-806
LL3-DJ02	5325992	J-806
LL3-DK04	5313020	J-808
LL3-DK06	5313019	J-807
LL3-DK21	5313023	J-807
LL3-DK33	5313031	J-813
LL3-DK43	5313030	J-812
LL3-DK4Z	5313026	J-808
LL3-DK63Z	5313027	J-812
LL3-DK66	5313024	J-807
LL3-DK67	5313025	J-807
LL3-DM01	5308071	J-807
LL3-DM02	5308077	J-807
LL3-DM03	5308084	J-812
LL3-DP01	5325998	J-808
LL3-DR01	5308078	J-807
LL3-DR02	5308079	J-806
LL3-DR03	5308080	J-808
LL3-DR04	5308081	J-808
LL3-DR05	5308087	J-812
LL3-DR06	5308082	J-806
LL3-DR07	5326007	J-812
LL3-DR08	5326037	J-807
LL3-DR09	5325528	J-811
LL3-DR10	5326005	J-813
LL3-DR11	5326000	J-808
LL3-DR12	5326001	J-808
LL3-DS06	5308073	J-806

Model name	Part no.	Page
LL3-DT01	5308076	J-806
LL3-DT02	5308085	J-812
LL3-DT03	5308072	J-808
LL3-DT04	5308086	J-812
LL3-DT05	5313028	J-812
LL3-DV01	5308088	J-813
LL3-DV02	5308089	J-813
LL3-DV03	5308090	J-813
LL3-DV05	5322549	J-809
LL3-DV06	5322550	J-809
LL3-DV07	5322551	J-809
LL3-DW01	5315234	J-815
LL3-DW02	5325608	J-817
LL3-DY01	5308093	J-815
LL3-DZ01	5326013	J-814
LL3-DZ02	5326014	J-814
LL3-DZ03	5326015	J-814
LL3-RB01	5326010	J-816
LL3-RB02	5326011	J-816
LL3-RG01	5326012	J-816
LL3-RR01	5326008	J-816
LL3-TA01	5308128	J-828
LL3-TA01S	5326461	J-828
LL3-TA02	5308129	J-828
LL3-TA03	5326462	J-828
LL3-TA04	5326463	J-828
LL3-TA05	5326464	J-828
LL3-TB01	5308050	J-818
LL3-TB02	5308048	J-818
LL3-TB03	5308056	J-823
LL3-TB05	5325924	J-823
LL3-TB06	5325916	J-820
LL3-TB07	5325919	J-819
LL3-TB08	5325917	J-818
LL3-TE01	5325807	J-821
LL3-TE02	5325910	J-821
LL3-TE03	5325908	J-822
LL3-TE04	5325911	J-821
LL3-TE05	5325914	J-821
LL3-TF01	5324242	J-827
LL3-TG01	5325940	J-826
LL3-TG02	5325943	J-826
LL3-TG03	5325942	J-826
LL3-TG04	5324499	J-826
LL3-TG05	5325921	J-819
LL3-TH01	5308064	J-825
LL3-TH02	5308065	J-825
LL3-TH06	5325926	J-819
LL3-TH07	5325977	J-820
LL3-TH08	5325978	J-825
LL3-TH09	5325979	J-825
LL3-TH10	5325970	J-825
LL3-TH11	5325971	J-825
LL3-TH12	5325972	J-825
LL3-TH13	5325973	J-825
LL3-TH14	5325974	J-825
LL3-TH15	5325975	J-820
LL3-TH16	5325976	J-820

Model name	Part no.	Page
WL11-2P2432	1048542	G-495
WL11G-2B2531	1041390	G-506
WL11G-2K3431	1048313	G-506
WL12-3N1131	1041441	G-532
WL12-3N1141	1041447	G-532
WL12-3N1151	1041451	G-533
WL12-3N1161	1041455	G-533
WL12-3N1731	1041442	G-532
WL12-3N2431	1041440	G-532
WL12-3N2441	1041446	G-532
WL12-3N2451	1041450	G-533
WL12-3N2461	1041454	G-533
WL12-3P1131	1041437	G-532
WL12-3P1141	1041445	G-532
WL12-3P1151	1041449	G-533
WL12-3P1161	1041453	G-533
WL12-3P1731	1041438	G-532
WL12-3P2431	1041436	G-532
WL12-3P2441	1041444	G-532
WL12-3P2451	1041448	G-533
WL12-3P2461	1041452	G-533
WL12-3V2431	1041537	G-532
WL12C-3P2432A70	1067775	G-533
WL12C-3P2432A71	1067776	G-533
WL12C-3P2432A91	1067777	G-533
WL12C-3P2432	1067774	G-533
WL12G-3B2531	1041456	G-522
WL12G-3N2572	1053530	G-522
WL12G-3O2431	1041457	G-522
WL12G-3P2572T01	1053546	G-523
WL12G-3P2572	1053535	G-522
WL12G-3P2582	1053536	G-522
WL12G-3V2572	1053537	G-523
WL12G-3W2572	1053538	G-523
WL12GC-3P2472A70	1067778	G-523
WL12GC-3P2472A71	1067779	G-523
WL12GC-3P2472A91	1061063	G-523
WL12GC-3P2472	1054087	G-523
WL12L-2B520	1018253	G-512
WL12L-2B530	1018252	G-512
WL12L-2B531	1047959	G-512
WL12L-2P130	1022041	G-512
WL14-2K930S11	1046864	G-547
WL14-2N130	1026047	G-547
WL14-2N430	1026048	G-547
WL14-2P030S13	1051200	G-547
WL14-2P130	1026050	G-547
WL14-2P430S03	1029850	G-547
WL14-2P430	1026049	G-547
WL14-2P431	1050271	G-547
WL15-A1130	1046279	I-769
WL15-A2430	1043323	I-769
WL15-B1130	1046280	I-769
WL15-B2430	1043324	I-769
WL15-E1133	1046149	I-769
WL15-E2433	1043318	I-769
WL15-F1133	1046150	I-769
WL15-F2433	1043319	I-769

Model name	Part no.	Page
WL15-N1130	1044304	I-769
WL15-N2430	1043320	I-769
WL15-P1130	1044303	I-769
WL15-P2430S01	1054623	I-769
WL15-P2430	1043321	I-769
WL18-3N130	1025913	G-560
WL18-3N430	1025915	G-560
WL18-3N630	1025916	G-560
WL18-3N730	1026030	G-560
WL18-3P130	1025909	G-560
WL18-3P430	1025911	G-560
WL18-3P630	1025912	G-560
WL18-3P730	1026029	G-560
WL18X-3P930	1029902	G-560
WL2000-B1302	7023044	H-674
WL2000-B1322	7023046	H-674
WL2000-B4300	7024002	H-674
WL2000-B5300	7023047	H-674
WL2000-B5320	7023049	H-674
WL2000-R1302	7023050	H-675
WL2000-R1322	7023052	H-675
WL2000-R5300	7023053	H-675
WL2000-R5320	7023055	H-675
WL23-2N2430	1027787	H-583
WL23-2P1130	1027784	H-583
WL23-2P2430S01	1041159	H-583
WL23-2P2430	1027785	H-583
WL23-2P2460	1044165	H-583
WL23-2P3430	1027786	H-583
WL24-2B230	1015852	H-593
WL24-2B240	1017859	H-593
WL24-2B430	1017860	H-593
WL24-2B440	1017879	H-593
WL24-2R230	1017857	H-594
WL24-2R240	1017858	H-594
WL24-2V230	1017880	H-593
WL24-2V240	1018024	H-593
WL24-2V530S04	1023550	H-593
WL24-2V530	1017881	H-593
WL24-2V540	1018025	H-593
WL24-2X230	1026036	H-604
WL24-2X430	1026037	H-604
WL250-2F2431	6044702	H-643
WL250-2N1131	6044695	H-643
WL250-2N2431	6044696	H-643
WL250-2P1131	6044697	H-643
WL250-2P1231	6044698	H-643
WL250-2P2431	6044699	H-643
WL250-2R1531	6044700	H-644
WL250-2R1631	6044701	H-644
WL27-3E2631	1027773	H-620
WL27-3F2631	1027772	H-620
WL27-3K2430	1028069	H-620
WL27-3P1102S16	1050825	E-136
WL27-3P1131	1027768	H-620
WL27-3P2402S18	1051577	E-136
WL27-3P2430S01	1028057	H-620
WL27-3P2430	1027769	H-620

Model name	Part no.	Page
WTB11-2P2461	1044442	G-494
WTB12-3N1111	1041429	G-530
WTB12-3N1131	1041418	G-530
WTB12-3N1711	1041430	G-530
WTB12-3N2411	1041427	G-530
WTB12-3N2413	1041428	G-530
WTB12-3N2431	1041416	G-530
WTB12-3N2433	1041417	G-530
WTB12-3P1111	1041424	G-530
WTB12-3P1131	1041413	G-530
WTB12-3P1711	1041426	G-530
WTB12-3P2411	1041422	G-530
WTB12-3P2413	1041423	G-530
WTB12-3P2431	1041411	G-530
WTB12-3P2433	1041412	G-530
WTB12-3P2441	1041421	G-530
WTB12-3P2461S01	1051967	G-530
WTB12-3P2461S58	1047850	G-531
WTB12C-3P2432A70	1067772	G-531
WTB12C-3P2432A71	1067773	G-531
WTB12C-3P2432A91	1060222	G-531
WTB12C-3P2432	1067771	G-531
WTB15-A1131	1046281	I-768
WTB15-A2431	1043325	I-768
WTB15-B1131	1046282	I-768
WTB15-B2431	1043326	I-768
WTB15-N1131	1046283	I-768
WTB15-N2431	1044306	I-768
WTB15-P1131	1046284	I-768
WTB15-P2431	1044305	I-768
WTB250-2F2441	6044685	H-642
WTB250-2N1131	6044672	H-642
WTB250-2N1141	6044678	H-642
WTB250-2N1151	6044686	H-643
WTB250-2N1251	6044687	H-643
WTB250-2N2431	6044673	H-642
WTB250-2N2441	6044679	H-642
WTB250-2N2451	6044689	H-643
WTB250-2P1131	6044674	H-642
WTB250-2P1141	6044680	H-642
WTB250-2P1151	6044690	H-643
WTB250-2P1241	6044681	H-642
WTB250-2P1251	6044691	H-643
WTB250-2P2431	6044675	H-642
WTB250-2P2441	6044682	H-642
WTB250-2P2451	6044692	H-643
WTB250-2R1531	6044676	H-643
WTB250-2R1541	6044683	H-643
WTB250-2R1551	6044693	H-643
WTB250-2R1631	6044677	H-643
WTB250-2R1641	6044684	H-643
WTB250-2R1651	6044694	H-643
WTB27-3E2411	1027755	H-619
WTB27-3E2611	1027757	H-619
WTB27-3E2641	1027747	H-619
WTB27-3F2411	1027753	H-619
WTB27-3F2611	1027756	H-619
WTB27-3F2641	1027746	H-619

Model name	Part no.	Page
WTB27-3N1111	1044855	H-619
WTB27-3N1161	1051644	H-619
WTB27-3N2413	1027761	H-619
WTB27-3N2483	1056385	E-132
WTB27-3P1111	1027752	H-619
WTB27-3P1113	1027759	H-619
WTB27-3P1211	1028065	H-619
WTB27-3P2411	1025994	H-619
WTB27-3P2413	1027760	H-619
WTB27-3P2421	1027754	H-619
WTB27-3P2441	1027744	H-619
WTB27-3P2443	1027745	H-619
WTB27-3P2461	1044163	H-619
WTB27-3P2483	1056384	E-132
WTB27-3P3411	1044438	H-619
WTB27-3P3441	1029082	H-619
WTB27-3P3461	1048546	H-619
WTB27-3R2611	1027763	H-621
WTB27-3R2641	1027750	H-621
WTB27-3S1511	1027762	H-621
WTB27-3S1541	1027749	H-621
WTB27X-3P1811	1027988	H-634
WTB2S-2E1310	1064397	F-218
WTB2S-2E1330	1064580	F-218
WTB2S-2F1310	1064394	F-218
WTB2S-2F1330	1064574	F-218
WTB2S-2F1360	1064606	F-219
WTB2S-2F3110	1064396	F-218
WTB2S-2F3130	1064576	F-218
WTB2S-2F3160	1064608	F-219
WTB2S-2N1130	1063321	F-218
WTB2S-2N1145	1063552	F-219
WTB2S-2N1151	1066113	F-219
WTB2S-2N1310	1064249	F-218
WTB2S-2N1330	1064578	F-218
WTB2S-2N1360	1064609	F-219
WTB2S-2N3230	1064581	F-218
WTB2S-2N3251	1066114	F-219
WTB2S-2P1145	1064614	F-219
WTB2S-2P1151	1066110	F-219
WTB2S-2P1175	1064621	F-219
WTB2S-2P1310	1064393	F-218
WTB2S-2P1330	1064573	F-218
WTB2S-2P1360	1064605	F-219
WTB2S-2P3110	1064395	F-218
WTB2S-2P3130	1064575	F-218
WTB2S-2P3160	1064607	F-219
WTB2S-2P3210	1063314	F-218
WTB2S-2P3230	1063517	F-218
WTB2S-2P3245	1064615	F-219
WTB2S-2P3251	1066111	F-219
WTB2S-2P3260	1063545	F-219
WTB2S-2P3275	1064620	F-219
WTB2SC-2P3244	1063550	F-219
WTB2SC-2P3274	1063646	F-220
WTB4-3E1361	1028108	F-240
WTB4-3E2161	1028110	F-240
WTB4-3F1361	1028105	F-240

Notes

Notes

8015327/2014-02-08 · SF · Pre USmod int42

SICK AT A GLANCE

SICK is a leading manufacturer of intelligent sensors and sensor solutions for factory, logistics, and process automation. With more than 6,000 employees and over 40 subsidiaries worldwide, we are always close to our customers. A unique range of products and services creates the perfect basis for controlling processes securely and efficiently, protecting individuals from accidents and preventing damage to the environment.

We have extensive experience in various industries and understand their processes and requirements. With intelligent sensors, we can deliver exactly what our customers need. In application centers in Europe, Asia and North America, system solutions are tested and optimized in accordance with customer specifications. All this makes us a reliable supplier and development partner.

Comprehensive services round out our offering: SICK LifeTime Services provide support throughout the machine life cycle and ensure safety and productivity.

For us, that is "Sensor Intelligence."

Worldwide presence:

Australia, Belgium/Luxembourg, Brasil, Česká republika, Canada, China, Danmark, Deutschland, España, France, Great Britain, India, Israel, Italia, Japan, Magyarország, México, Nederland, Norge, Österreich, Polska, România, Russia, Schweiz, Singapore, Slovenija, South Africa, South Korea, Suomi, Sverige, Taiwan, Türkiye, United Arab Emirates, USA.

Please find detailed addresses and additional representatives and agencies in all major industrial nations at: www.sick.com

SICK
Sensor Intelligence.